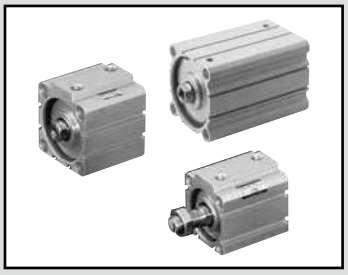

Compact cylinder double acting/single rod

SSD Series

● Bore size: ø12/ø16/ø20/ø25/ø32/ø40/ø50/ø63/ø80/ø100/ø125/ø140/ø160

JIS symbol

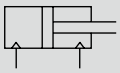

RoHS CAD

Specifications

Item		SSD SSD-L (with switch)												
Bore size mm		ø12	ø16	ø20	ø25	ø32	ø40	ø50	ø63	ø80	ø100	ø125	ø140	ø160
Actuation		Double acting												
Working fluid		Compressed air												
Max. working pressure MPa		1.0 (≈150 psi, 10 bar)												
Min. working pressure MPa		0.1 (≈15 psi, 1 bar)							0.05 (≈7.3 psi, 0.5 bar)					
Proof pressure MPa		1.6 (≈230 psi, 16 bar)												
Ambient temperature °C		-10 (14°F) to 60 (140°F) (no freezing)												
Port size		M5				Rc 1/8		Rc 1/4		Rc 3/8				
Stroke tolerance mm	With rubber cushion	$^{+2.0}_{0}$												
	Without cushion	$^{+1.0}_{0}$										-		
Working piston speed mm/s		50 to 500							50 to 300					
Cushion		With or without cushion can be selected										With rubber cushion (standard)		
Lubrication		Not required (use turbine oil class 1 ISO VG32 if necessary for lubrication)												
Allowable absorbed energy J	With rubber cushion	0.03	0.05	0.10	0.16	0.16	0.44	0.75	0.78	2.51	3.92	6.52	6.52	7.78
	Without cushion	0.004	0.01	0.016	0.021	0.025	0.092	0.1	0.12	0.27	0.56	-		

Clean-room specifications

(Catalog No. CB-033SA)

● Anti-dust generation structure for use in cleanrooms

SSD····· P7*

SSD····· P5*

Specifications for rechargeable battery

(Catalog No. CC-1226A)

● Design compatible with rechargeable battery manufacturing process

SSD····· P4*

Stroke length

Bore size (mm)	Standard stroke length (mm)	Max. stroke length (mm)	Min. stroke length (mm)
ø12	5, 10, 15, 20, 25, 30	*1) 30	1
ø16			
ø20	5, 10, 15, 20, 25, 30, 40, 50	*1) 50	
ø25			
ø32			
ø40			
ø50			
ø63	5, 10, 20, 30, 40, 50	*1) 50	
ø80			
ø100			
ø125	10, 20, 30, 40 50, 60, 70, 80 90, 100	300	
ø140			
ø160			

*1) For ø12 to ø100, if the standard stroke is exceeded, the high load is used. Refer to page 1116 for specifications.
*2) For the type with switch, refer to the table on the following page of installed switch numbers and minimum stroke length.
*3) Refer to pages 1320 and 1321 for the min. stroke length with mounting brackets LB and LB2.

Number of installed switches and min. stroke length (mm)

Switch quantity	1	2	3	4	5
Switch model No. / Bore size (mm)	T*	T*	T*	T*	T*
ø12	5	5	25	-	-
ø16	5	5	25	-	-
ø20	5	5	35	50	-
ø25	5	5	35	50	-
ø32	5	5	35	50	-
ø40	5	5	35	50	-
ø50	5	5	35	50	-
ø63	5	5	35	50	-
ø80	5	5	35	50	-
ø100	5	5	35	50	-
ø125	5	5	40	55	70
ø140	5	5	40	55	70
ø160	5	5	40	55	70

Note: Less than 10 mm with the 2-color display, off-delay, AC magnetic field proof, T1* or T8* switch is not available.

Custom stroke length

● SSD Series

Item	Standard products Standard stroke length body with spacer		Optional products Dedicated unit (-S)	
Model No.	Refer to How to order.		Add "-S" option code to the model No.	
Description	A spacer is added to the standard stroke length body to adjust the stroke length in 1 mm increments.		Dedicated units of the required stroke length are available.	
Stroke range	Bore size	Stroke range	Bore size	Stroke range
	12/16	1 to 29	12/16	6 (11) to 29 (*1)
	20 to 50	1 to 49	20 to 50	6 to 49
	63 to 100	1 to 49	63 to 100	6 to 49
	125 to 160	1 to 299 (*2)	125 to 160	1 to 299 (*2)
Example of model No.	Model No.: SSD-32-38 A +2 mm spacer is added to the SSD-32-40 standard cylinder to create 38 mm stroke length. B dimension is 63 mm.		Model No.: SSD-32-38-S Dedicated units for 38 mm stroke length are available. B dimension is 61mm.	

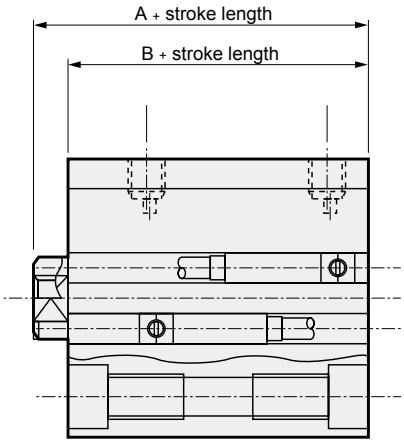

*1) The value in ( ) is for type with switch.
*2) Dedicated body is available as standard for ø125 to ø160.

Switch specifications

● 1-color/2-color display/for AC magnetic field proof

Item	Proximity 2-wire				Proximity 3-wire				Reed 2-wire							Proximity 2-wire
	T1H/ T1V	T2H/T2V/ T2JH/T2JV	T2YH/ T2YV	T2WH/ T2WV	T3H/ T3V	T3PH/ T3PV	T3YH/ T3YV	T3WH/ T3WV	T0H/T0V	T5H/T5V		T8H/T8V				T2YD (*4) T2YDT
Applications	For programmable controller, relay, compact solenoid valve	Dedicated for programmable controller			For programmable controller, relay				For programmable controller, relay	For programmable controller, relay (no lamp), serial		For programmable controller, relay				Dedicated for programmable controller
Output method	-				NPN output	PNP output	NPN output	NPN output	-							
Pwr. supp. V.	-				10 to 28 VDC				-							
Load voltage	85 to 265 VAC	10 to 30 VDC		24 VDC ±10%	30 VDC or less				12/24 VDC	100/110 VAC	5/12/24 VDC	100/110 VAC	12/24 VDC	110 VAC	220 VAC	24 VDC ±10%
Load current	5 to 100 mA	5 to 20 mA (*3)			100 mA or less		50 mA or less		5 to 50 mA	7 to 20 mA	50 mA or less	20 mA or less	5 to 50 mA	7 to 20 mA	7 to 10 mA	5 to 20 mA
Indicator lamp	LED (Lit when ON)	LED (Lit when ON)	Red/green LED (Lit when ON)	Red/green LED (Lit when ON)	LED (Lit when ON)	Yellow LED (Lit when ON)	Red/green LED (Lit when ON)	Red/green LED (Lit when ON)	LED (Lit when ON)		Without indicator lamp		LED (Lit when ON)			Red/green LED (Lit when ON)
Leakage current	≤ 1 mA at 100 VAC, ≤ 2 mA at 200 VAC	1 mA or less			10 μA or less				0 mA							1 mA or less
Weight g	1 m:33 3 m:87 5 m:142	1 m:18 3 m:49 5 m:80	1 m:33 3 m:87 5 m:142	1 m:18 3 m:49 5 m:80	1 m:18 3 m:49 5 m:80		1 m:33 3 m:87 5 m:142	1 m:18 3 m:49 5 m:80	1 m:18 3 m:49 5 m:80			1 m:33 3 m:87 5 m:142				1 m:61 3 m:166 5 m:272

*1 : Refer to Ending Page 1 for detailed switch specifications and dimensions.
*2 : Switches other than the above models, such as switches with connectors, are also available. Refer to Ending Page 1.
*3 : The max. load current is 20 mA at 25°C. The current is lower than 20 mA if the operating ambient temperature around the switch is higher than 25°C. (5 to 10 mA at 60°C)
*4 : Switch for AC magnetic field (T2YD/T2YDT) cannot be used in DC magnetic field.

Cylinder weight table (the weight of the switches is when there are 2 cylinder switches.)

● ø12 to ø100 (Unit: g)

Stroke length (mm)	5		10		15		20		25		30		40		50	
Bore size (mm)	No switch	With switch	No switch	With switch	No switch	With switch	No switch	With switch	No switch	With switch	No switch	With switch	No switch	With switch	No switch	With switch
ø12	36	86	44	86	53	95	61	103	70	112	72	114	-	-	-	-
ø16	48	104	59	104	69	114	80	125	91	136	102	147	-	-	-	-
ø20	63	138	75	150	88	163	101	176	113	188	126	201	151	226	176	251
ø25	87	178	102	193	118	209	134	225	150	241	165	256	197	288	228	319
ø32	122	236	144	258	166	280	188	302	209	323	231	345	275	389	318	432
ø40	183	326	210	353	236	379	263	406	290	433	316	459	369	512	422	565
ø50	299	493	341	535	383	577	425	619	467	661	510	704	594	788	678	872
ø63	452	731	507	786	-	-	617	896	-	-	727	1006	838	1117	948	1227
ø80	841	1254	928	1341	-	-	1101	1514	-	-	1274	1687	1448	1861	1621	2034
ø100	1319	1886	1433	2000	-	-	1660	2227	-	-	1888	2455	2115	2682	2343	2910

● ø125 to ø160 (Unit: kg)

Stroke length (mm) / Bore size (mm)	10		20		30		40		50		60		70		80		90		100	
	Without switch	With switch	Without switch	With switch	Without switch	With switch	Without switch	With switch	Without switch	With switch	Without switch	With switch	Without switch	With switch	Without switch	With switch	Without switch	With switch	Without switch	With switch
ø125	4.35	4.45	4.62	4.72	4.88	4.98	5.15	5.25	5.41	5.51	5.68	5.78	5.94	6.04	6.21	6.31	6.47	6.57	6.74	6.84
ø140	6.33	6.44	6.63	6.74	6.94	7.05	7.24	7.35	7.55	7.66	7.85	7.96	8.16	8.27	8.46	8.57	8.77	8.88	9.07	9.18
ø160	8.64	8.76	9.02	9.14	9.4	9.52	9.78	9.9	10.16	10.28	10.54	10.66	10.92	11.04	11.3	11.42	11.68	11.8	12.06	12.18

Theoretical thrust table

(Unit: N)

Bore size (mm)	Operating direction	Working pressure MPa											
		0.05	0.1	0.15	0.2	0.3	0.4	0.5	0.6	0.7	0.8	0.9	1.0
ø12	Push	-	11.3	17.0	22.6	33.9	45.2	56.5	67.9	79.2	90.5	1.02×10^2	1.13×10^2
	Pull	-	8.48	12.7	17.0	25.4	33.9	42.4	50.9	59.4	67.9	76.3	84.8
ø16	Push	-	20.1	30.2	40.2	60.3	80.4	1.01×10^2	1.21×10^2	1.41×10^2	1.61×10^2	1.81×10^2	2.01×10^2
	Pull	-	15.1	22.6	30.2	45.2	60.3	75.4	90.5	1.06×10^2	1.21×10^2	1.36×10^2	1.51×10^2
ø20	Push	-	31.4	47.1	62.8	94.2	1.26×10^2	1.57×10^2	1.88×10^2	2.20×10^2	2.51×10^2	2.83×10^2	3.14×10^2
	Pull	-	23.6	35.3	47.1	70.7	94.2	1.18×10^2	1.41×10^2	1.65×10^2	1.88×10^2	2.12×10^2	2.36×10^2
ø25	Push	-	49.1	73.6	98.2	1.47×10^2	1.96×10^2	2.45×10^2	2.95×10^2	3.44×10^2	3.93×10^2	4.42×10^2	4.91×10^2
	Pull	-	37.8	56.7	75.6	1.13×10^2	1.51×10^2	1.89×10^2	2.27×10^2	2.64×10^2	3.02×10^2	3.40×10^2	3.78×10^2
ø32	Push	-	80.4	1.21×10^2	1.61×10^2	2.41×10^2	3.22×10^2	4.02×10^2	4.83×10^2	5.63×10^2	6.43×10^2	7.24×10^2	8.04×10^2
	Pull	-	60.3	90.5	1.21×10^2	1.81×10^2	2.41×10^2	3.02×10^2	3.62×10^2	4.22×10^2	4.83×10^2	5.43×10^2	6.03×10^2
ø40	Push	-	1.26×10^2	1.88×10^2	2.51×10^2	3.77×10^2	5.03×10^2	6.28×10^2	7.54×10^2	8.80×10^2	1.01×10^3	1.13×10^3	1.26×10^3
	Pull	-	1.06×10^2	1.58×10^2	2.11×10^2	3.17×10^2	4.22×10^2	5.28×10^2	6.33×10^2	7.39×10^2	8.44×10^2	9.50×10^2	1.06×10^3
ø50	Push	-	1.96×10^2	2.95×10^2	3.93×10^2	5.89×10^2	7.85×10^2	9.82×10^2	1.18×10^3	1.37×10^3	1.57×10^3	1.77×10^3	1.96×10^3
	Pull	-	1.65×10^2	2.47×10^2	3.30×10^2	4.95×10^2	6.60×10^2	8.25×10^2	9.90×10^2	1.15×10^3	1.32×10^3	1.48×10^3	1.65×10^3
ø63	Push	1.56×10^2	3.12×10^2	4.68×10^2	6.23×10^2	9.35×10^2	1.25×10^3	1.56×10^3	1.87×10^3	2.18×10^3	2.49×10^3	2.81×10^3	3.12×10^3
	Pull	1.40×10^2	2.80×10^2	4.20×10^2	5.61×10^2	8.41×10^2	1.12×10^3	1.40×10^3	1.68×10^3	1.96×10^3	2.24×10^3	2.52×10^3	2.80×10^3
ø80	Push	2.51×10^2	5.03×10^2	7.54×10^2	1.01×10^3	1.51×10^3	2.01×10^3	2.51×10^3	3.02×10^3	3.52×10^3	4.02×10^3	4.52×10^3	5.03×10^3
	Pull	2.27×10^2	4.54×10^2	6.80×10^2	9.07×10^2	1.36×10^3	1.81×10^3	2.27×10^3	2.72×10^3	3.17×10^3	3.63×10^3	4.08×10^3	4.54×10^3
ø100	Push	3.93×10^2	7.85×10^2	1.18×10^3	1.57×10^3	2.36×10^3	3.14×10^3	3.93×10^3	4.71×10^3	5.50×10^3	6.28×10^3	7.07×10^3	7.85×10^3
	Pull	3.57×10^2	7.15×10^2	1.07×10^3	1.43×10^3	2.14×10^3	2.86×10^3	3.57×10^3	4.29×10^3	5.00×10^3	5.72×10^3	6.43×10^3	7.15×10^3
ø125	Push	6.13×10^2	1.23×10^3	1.84×10^3	2.45×10^3	3.68×10^3	4.91×10^3	6.14×10^3	7.36×10^3	8.59×10^3	9.82×10^3	1.10×10^4	1.23×10^4
	Pull	5.65×10^2	1.13×10^3	1.70×10^3	2.26×10^3	3.39×10^3	4.52×10^3	5.65×10^3	6.79×10^3	7.92×10^3	9.05×10^3	1.02×10^4	1.13×10^4
ø140	Push	7.69×10^2	1.54×10^3	2.31×10^3	3.08×10^3	4.62×10^3	6.16×10^3	7.70×10^3	9.24×10^3	1.08×10^4	1.23×10^4	1.39×10^4	1.54×10^4
	Pull	7.21×10^2	1.44×10^3	2.16×10^3	2.89×10^3	4.33×10^3	5.77×10^3	7.22×10^3	8.66×10^3	1.01×10^4	1.15×10^4	1.30×10^4	1.44×10^4
ø160	Push	10.1×10^3	2.01×10^3	3.02×10^3	4.02×10^3	6.03×10^3	8.04×10^3	1.01×10^4	1.21×10^4	1.41×10^4	1.61×10^4	1.81×10^4	2.01×10^4
	Pull	9.42×10^2	1.88×10^3	2.83×10^3	3.77×10^3	5.65×10^3	7.54×10^3	9.42×10^3	1.13×10^4	1.32×10^4	1.51×10^4	1.70×10^4	1.88×10^4

SCP*3
CMK2
CMA2
SCM
SCG
SCA2
SCS2
CKV2
CAV2/COVP/N2
SSD2
SSG
SSD
CAT
MDC2
MVC
SMG
MSD/MSDG
FC*
STK
SRL3
SRG3
SRM3
SRT3
MRL2
MRG2
SM-25
ShkAbs
FJ
FK
Spd Contr
Ending

How to order

Without switch (without magnet for switch)

SSD - 12 ◯◯ - 5 ———— N - LB - I

With switch (built-in magnet for switch)

SSD-L - 12 ◯◯ - 5 - T0H - R - N - LB - I

2-color display/off-delay, with T1* switch (ø12/ø16 only) (built-in magnet for switch)

SSD-L1 - 12 ◯◯ - 10 - T2YH - R - N - LB - I

Ⓐ Model No.

Ⓑ Bore size

Ⓒ Port thread

Ⓓ Cushion

Ⓔ Stroke length

Ⓕ Switch model No.
*1
*2
*3
*10

Ⓖ Switch quantity

Ⓗ Option
*4

Ⓘ Mounting bracket
*5
*6
*11

Ⓙ Accessory
*7

⚠ Precautions for model No. selection

*1 : Switches other than Ⓕ Switch model No. are also available. (Made to order) Refer to Ending Page 1 for details.
*2 : AC magnetic field proof switch cannot be installed on ø12 and ø16.
3 : T8 switch cannot be installed on ø12 to ø32.
*4 : Piston rod of ø12 to ø25 is stainless steel as standard. C type snap ring is stainless steel instead of steel. The rod end male thread nut is stainless steel.
*5 : The mounting bracket is included at shipment.
*6 : The projection dimension of piston rod WF when LB2 or FA is selected is different from that of the standard. Refer to the dimensions on pages 1109 to 1110. The number of the specified protruding dimension will be added at the end of the model No. printed on the metal plate on the body.
*7 : "I" and "Y" cannot be selected together.
*8 : Refer to Ending Page 85 for custom specifications of rod end form.
*9 : Refer to pages 1086 to 1091 for combinations of variations/options.
*10 : Switches are shipped with the product. Contact CKD if assembling before shipment is necessary.
*11 : Only LB and CB are available for ø125 to ø160.

[Example of model No.]

SSD-L-12-5-T0H-R-N-LB-I

Model: Compact cylinder, standard

Ⓑ Bore size : ø12 mm
Ⓒ Port thread : Rc thread
Ⓓ Cushion : Without cushion
Ⓔ Stroke length : 5 mm
Ⓕ Switch model No. : Reed switch T0H
·Lead wire length 1 m
Ⓖ Switch quantity : 1 on rod side
Ⓗ Option : Rod end male thread
Ⓘ Mounting bracket : Axial foot
Ⓙ Accessory : Rod eye

Code	Description
Ⓐ Model No.	
SSD	Double acting/single rod
SSD-L	Double acting/single rod/with switch
SSD-L1	ø12, ø16 2-color display, off-delay, with T1* switch
Ⓑ Bore size (mm)	
12	ø12
16	ø16
20	ø20
25	ø25
32	ø32
40	ø40
50	ø50
63	ø63
80	ø80
100	ø100
125	ø125
140	ø140
160	ø160
Ⓒ Port thread	
Blank	Rc thread
NN	NPT thread (ø32 and over) (made-to-order product)
GN	G thread (ø32 and over) (made-to-order product)
Ⓓ Cushion	
Blank	Without cushion (with rubber cushion for ø125 and over)
D	With rubber cushion (ø12 to ø100)
Ⓔ Stroke length (mm)	
Refer to the stroke length table on the following page.	

Ⓕ Switch model No.

Axial lead wire	Radial lead wire	Contact	Voltage AC	Voltage DC	Display	Lead wire
TOH*	T0V*	Reed	●	●	1-color display	2-wire
T5H*	T5V*	Reed	●	●	Without indicator lamp	2-wire
T8H*	T8V*	Reed	●	●	1-color display	2-wire
T1H*	T1V*	Proximity	●		1-color display	2-wire
T2H*	T2V*	Proximity		●	1-color display	2-wire
T3H*	T3V*	Proximity		●	1-color display	3-wire
T3PH*	T3PV*	Proximity		●	1-color display	3-wire
T2WH*	T2WV*	Proximity		●	2-color display	2-wire
T2YH*	T2YV*	Proximity		●	2-color display	2-wire
T3WH*	T3WV*	Proximity		●	2-color display	3-wire
T3YH*	T3YV*	Proximity		●	2-color display	3-wire
T2JH*	T2JV*	Proximity		●	1-color display off-delay	2-wire
T2YD*	-	Proximity		●	2-color display AC magnetic field	2-wire
T2YDT*	-	Proximity		●	2-color display AC magnetic field	2-wire
T2HR3	T2VR3	Proximity		●	1-color display (bend resist lead wire specs)	2-wire

* Lead wire length	
Blank	1 m (standard)
3	3 m (option)
5	5 m (option)
Ⓖ Switch quantity	
R	1 on rod side
H	1 on head side
D	2

Ⓗ Option

	Bore size (mm)	12	16	20	25	32	40	50	63	80	100	125	140	160
Blank	Rod end female thread	●	●	●	●	●	●	●	●	●	●	●	●	●
N	Rod end male thread	●	●	●	●	●	●	●	●	●	●	●	●	●
P6	Cu/PTFE free specs	Supported as standard							●	●	●			
S	Unit for custom stroke	●	●	●	●	●	●	●	●	●	●	Supported as standard		
M	Piston rod material (S.S.)	●	●	●	●	●	●	●	●	●	●			

Ⓘ Mounting bracket	
LB	Axial foot
LB2	Axial foot (compact)
CB	Clevis bracket (pin and snap ring included)
CB2	Clevis bracket (compact) (pin and snap ring included)
FA	Rod side flange
FB	Head side flange
Ⓙ Accessory (available when rod end male thread "N" is selected)	
I	Rod eye
I2	Rod eye (compact)
Y	Rod clevis (pin and snap ring included)
Y2	Rod clevis (compact) (pin and snap ring included)

[Stroke length table]

Stroke length (mm)		Applicable bore size												
		ø12	ø16	ø20	ø25	ø32	ø40	ø50	ø63	ø80	ø100	ø125	ø140	ø160
Standard stroke length	5	●	●	●	●	●	●	●	●	●	●			
	10	●	●	●	●	●	●	●	●	●	●	●	●	●
	15	●	●	●	●	●	●	●						
	20	●	●	●	●	●	●	●	●	●	●	●	●	●
	25	●	●	●	●	●	●	●						
	30	●	●	●	●	●	●	●	●	●	●	●	●	●
	40			●	●	●	●	●	●	●	●	●	●	●
	50			●	●	●	●	●	●	●	●	●	●	●
	60											●	●	●
	70											●	●	●
	80											●	●	●
	90											●	●	●
	100											●	●	●
Min. stroke length (mm) *1		1												
Max. stroke length (mm)		30		50								300		
Custom stroke length *2		In 1 mm increments												

If the standard stroke is exceeded, the high load (K) is used. Refer to page 1116 for specifications, and pages 1122 to 1125 for dimensions.

1 : Less than 5 mm for 1-color display switch and less than 10 mm for the 2-color display, off-delay, AC magnetic field proof, T1 or T8* switch are not available.
Refer to page 1094 for the number of installed switches and the min. stroke length.

*2 : Total length when using a custom stroke length is different between ø12 to ø100 and ø125 to ø160 as below.
Please be careful.
[ø12 to ø100]
The dimensions of the total length with the custom stroke length are the handled same as the next longer standard stroke length.
[ø125 to ø160]
Total length dimension with custom stroke length is handled as the custom stroke dedicated length.

*3 : Refer to pages 1320 and 1321 for the min. stroke length with mounting brackets LB and LB2.

How to order switch

SW - T0H

Switch model No.
(Item Ⓕ on page 1096)

Clean-room specifications (Catalog No. CB-033SA)

● Anti-dust generation structure for use in cleanrooms

SSD ····· **P7***

SSD ····· **P5***

Specifications for rechargeable battery (catalog No. CC-1226A)

● Design compatible with rechargeable battery manufacturing process

SSD ····· **P4***

How to order mounting bracket

Bore size (mm) / Mounting bracket	ø12	ø16	ø20	ø25	ø32	ø40	ø50
Foot (LB)	SSD-LB-12	SSD-LB-16	SSD-LB-20	SSD-LB-25	SSD-LB-32	SSD-LB-40	SSD-LB-50
Foot (LB2)	SSD-LB2-12	SSD-LB2-16	SSD-LB2-20	SSD-LB2-25	SSD-LB2-32	SSD-LB2-40	SSD-LB2-50
Flange (FA/FB)	SSD-FA-12	SSD-FA-16	SSD-FA-20	SSD-FA-25	SSD-FA-32	SSD-FA-40	SSD-FA-50
Clevis bracket (CB)	SSD-CB-12	SSD-CB-16	SSD-CB-20	SSD-CB-25	SSD-CB-32	SSD-CB-40	SSD-CB-50
Clevis bracket (CB2)	SSD-CB2-12	SSD-CB2-16	SSD-CB2-20	SSD-CB2-25	SSD-CB2-32	SSD-CB2-40	SSD-CB2-50

Bore size (mm) / Mounting bracket	ø63	ø80	ø100	ø125	ø140	ø160	
Foot (LB)	SSD-LB-63	SSD-LB-80	SSD-LB-100	SSD-LB-125	SSD-LB-140	SSD-LB-160	
Foot (LB2)	SSD-LB2-63	SSD-LB2-80	SSD-LB2-100	-	-	-	
Flange (FA/FB)	SSD-FA-63	SSD-FA-80	SSD-FA-100	-	-	-	
Clevis bracket (CB)	SSD-CB-63	SSD-CB-80	SSD-CB-100	SSD-CB-125	SSD-CB-140	SSD-CB-160	
Clevis bracket (CB2)	SSD-CB2-63	SSD-CB2-80	SSD-CB2-100	-	-	-	

*1: The foot mounting bracket is provided as 2 pcs./set.

SCP*3
CMK2
CMA2
SCM
SCG
SCA2
SCS2
CKV2
CAV2/COVP/N2
SSD2
SSG
SSD
CAT
MDC2
MVC
SMG
MSD/MSDG
FC*
STK
SRL3
SRG3
SRM3
SRT3
MRL2
MRG2
SM-25
ShkAbs
FJ
FK
Spd Contr
Ending

Internal structure and parts list (ø12 to 50) (no cushion)

● SSD-L-12 to 25 (double acting/with switch)

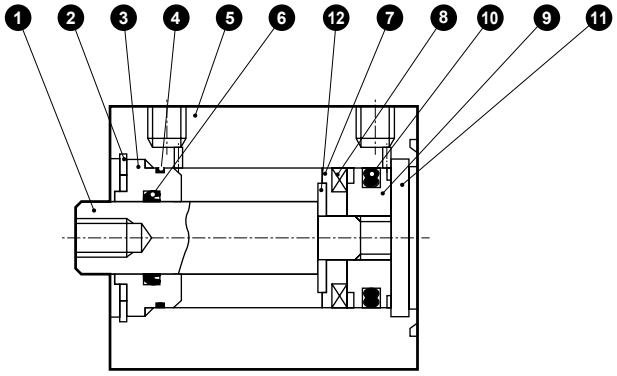

● SSD-L-32 to 50 (double acting/with switch)

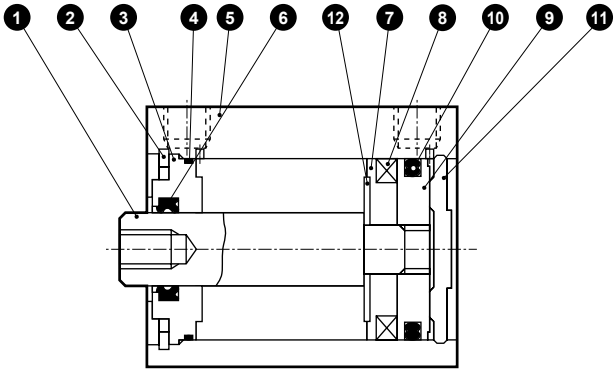

● SSD-12 to 25 (double acting)

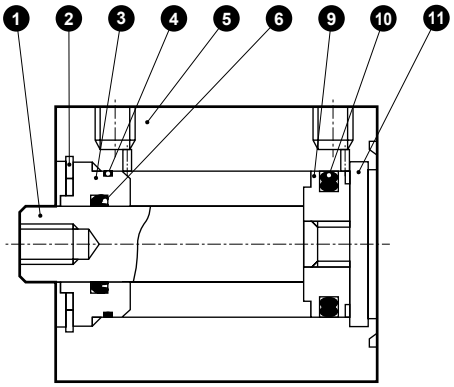

● SSD-32 to 50 (double acting)

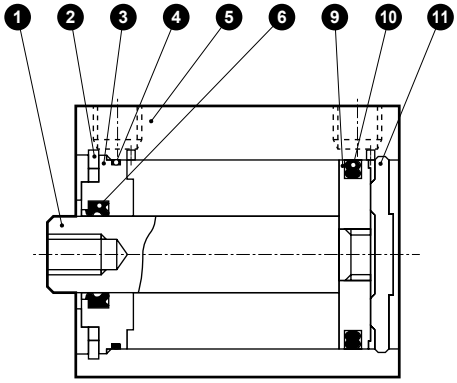

No.	Part name	Material	Remarks
1	Piston rod	ø12 to ø25: Stainless steel, ø32 to ø50: Steel	ø16 to ø50: Industrial chrome plating
2	C type snap ring	Steel	Zinc phosphate
3	Rod metal	Special aluminum	Alumite
4	Rod metal gasket	Nitrile rubber	
5	Body	Aluminum alloy	Hard alumite
6	Rod packing	Nitrile rubber	

No.	Part name	Material	Remarks
7	Spacer	ø12: Aluminum alloy ø16 to ø50: Special resin	Chromate (ø12)
8	Magnet	Plastic	
9	Piston	Aluminum alloy	Chromate
10	Piston packing	Nitrile rubber	
11	Cover	ø12 to ø25: Stainless steel ø32 to ø50: Aluminum alloy	ø32 to ø50: Alumite
12	Spacer washer	Stainless steel	ø20 to ø50

Repair parts list

Bore size (mm)	Kit No.	Repair parts No.
ø12	SSD-12K	❹ ❻ ❿
ø16	SSD-16K	
ø20	SSD-20K	
ø25	SSD-25K	
ø32	SSD-32K	
ø40	SSD-40K	
ø50	SSD-50K	

Internal structure and parts list (ø63 to 100) (no cushion)

● SSD-L-63 to 100 (double acting/with switch)

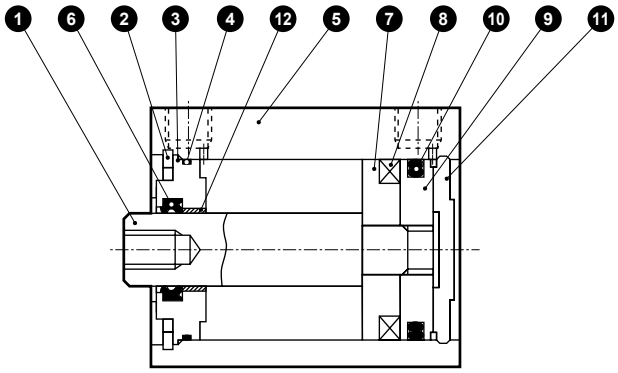

● SSD-63 to 100 (double acting)

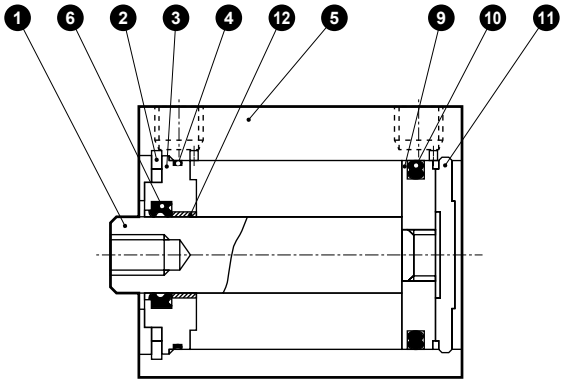

No.	Part name	Material	Remarks	No.	Part name	Material	Remarks
1	Piston rod	Steel	Industrial chrome plating	7	Spacer	Aluminum alloy	Chromate
2	C type snap ring	Steel	Zinc phosphate	8	Magnet	Plastic	
3	Rod metal	Aluminum alloy	Chromate	9	Piston	Aluminum alloy	Chromate
4	Rod metal gasket	Nitrile rubber		10	Piston packing	Nitrile rubber	
5	Body	Aluminum alloy	Hard alumite	11	Cover	Aluminum alloy	Alumite
6	Rod packing	Nitrile rubber		12	Bush	Oiles drymet	*1

*1: Material is steel for copper and PTFE free specifications.

Repair parts list

Bore size (mm)	Kit No.	Repair parts No.
ø63	SSD-63K	❹ ❻ ❿
ø80	SSD-80K	
ø100	SSD-100K	

SCP*3
CMK2
CMA2
SCM
SCG
SCA2
SCS2
CKV2
CAV2/COVP/N2
SSD2
SSG
SSD
CAT
MDC2
MVC
SMG
MSD/MSDG
FC*
STK
SRL3
SRG3
SRM3
SRT3
MRL2
MRG2
SM-25
ShkAbs
FJ
FK
Spd Contr
Ending

Internal structure and parts list (ø125 to ø160) (with cushion)

● SSD-L-ø125 to ø160 (double acting/single rod/with switch)

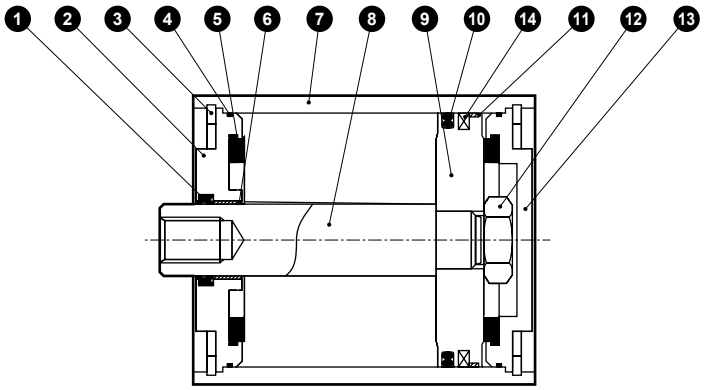

● SSD-L-ø125 to ø160 (double acting/single rod)

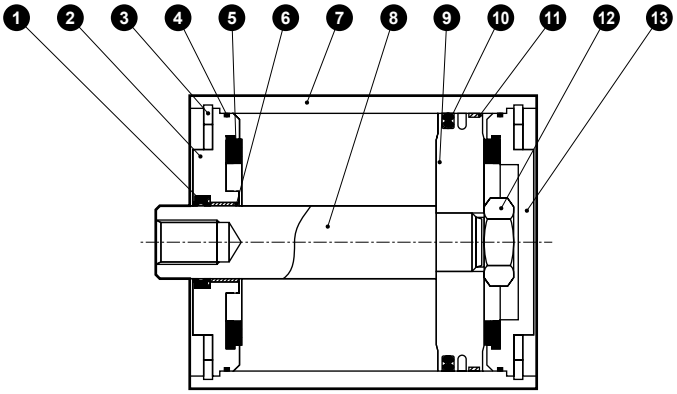

No.	Part name	Material	Remarks	No.	Part name	Material	Remarks
1	Rod packing	Nitrile rubber		9	Piston	Aluminum die-casting	
2	Rod metal	Aluminum die-casting	Chromate	10	Piston packing	Nitrile rubber	
3	C type snap ring	Steel	Zinc phosphate	11	Wear ring	Polyacetal resin	
4	Metal gasket	Nitrile rubber		12	Hexagon nut	Steel	Zinc chromate
5	Cushion rubber	Urethane rubber		13	Base plate	Aluminum die-casting	Chromate
6	Bush	Oiles drymet		14	Magnet	Rubber	SSD-L only
7	Body	Aluminum alloy	Hard alumite				
8	Piston rod	Steel	Industrial chrome plating				

Repair parts list

Bore size (mm)	Kit No.	Repair parts No.
ø125	SSD-125K	❶ ❹ ❺ ❿ ⓫
ø140	SSD-140K	
ø160	SSD-160K	

*1: Specify the kit No. when placing an order.

Internal structure and parts list (ø12 to ø32) (with rubber cushion)

● SSD-L-12D (double acting/with switch)

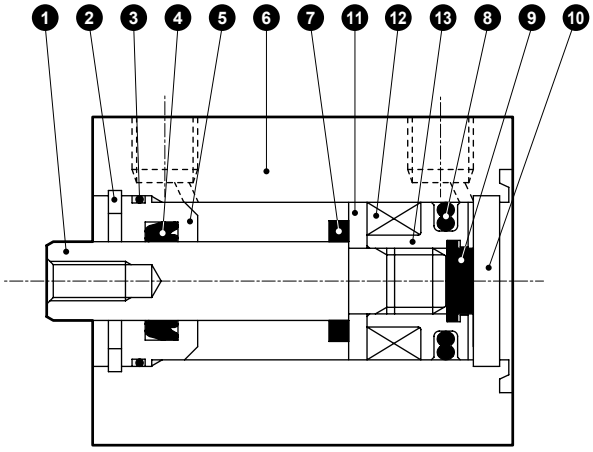

● SSD-L-16D to 32D (double acting/with switch)

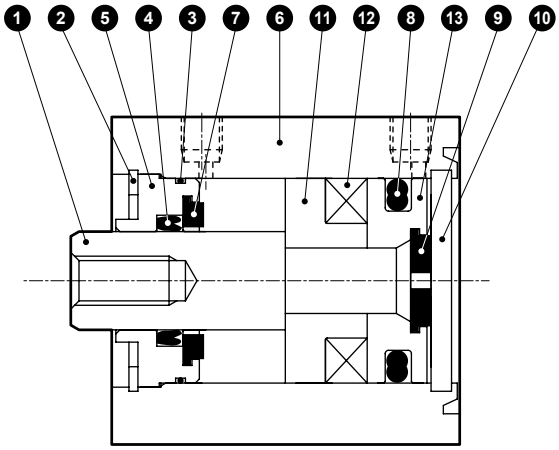

● SSD-12D (double acting)

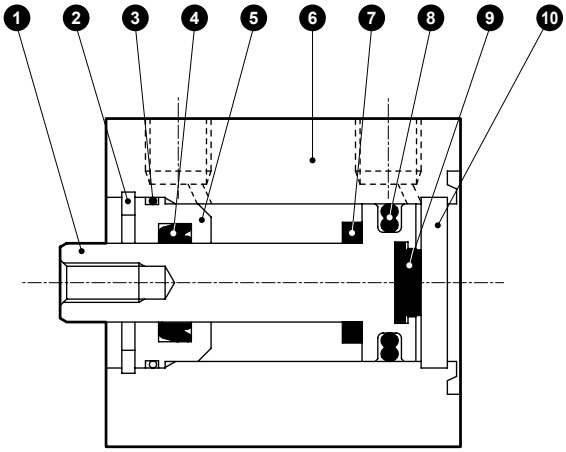

● SSD-16D to 32D (double acting)

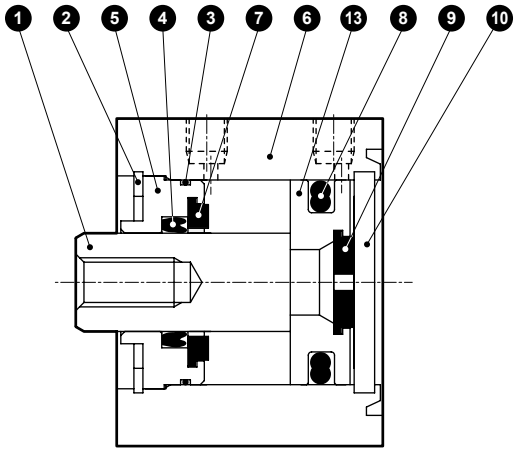

No.	Part name	Material	Remarks
1	Piston rod	ø12 to ø25: Stainless steel ø32: Steel	ø16 to ø32 Industrial chrome plating
2	C type snap ring	Steel	Zinc phosphate
3	Rod metal gasket	Nitrile rubber	
4	Rod packing	Nitrile rubber	
5	Rod metal	Aluminum alloy	Alumite
6	Body	Aluminum alloy	Hard alumite
7	Cushion rubber R	Urethane rubber	

No.	Part name	Material	Remarks
8	Piston packing	Nitrile rubber	
9	Cushion rubber H	Urethane rubber	
10	Cover	ø12 to ø25: Stainless steel ø32: Aluminum alloy	ø32: Alumite
11	Spacer	Aluminum alloy	Chromate
12	Magnet	Plastic	
13	Piston	Aluminum alloy	Chromate

Repair parts list

Bore size (mm)	Kit No.	Repair parts No.
ø12	SSD-12DK	❸ ❹ ❼ ❽ ❾
ø16	SSD-16DK	
ø20	SSD-20DK	
ø25	SSD-25DK	
ø32	SSD-32DK	

SCP*3
CMK2
CMA2
SCM
SCG
SCA2
SCS2
CKV2
CAV2/COVP/N2
SSD2
SSG
SSD
CAT
MDC2
MVC
SMG
MSD/MSDG
FC*
STK
SRL3
SRG3
SRM3
SRT3
MRL2
MRG2
SM-25
ShkAbs
FJ
FK
Spd Contr
Ending

Internal structure and parts list (ø40 to ø100) (with rubber cushion)

● SSD-L-40D to 50D (double acting/with switch)

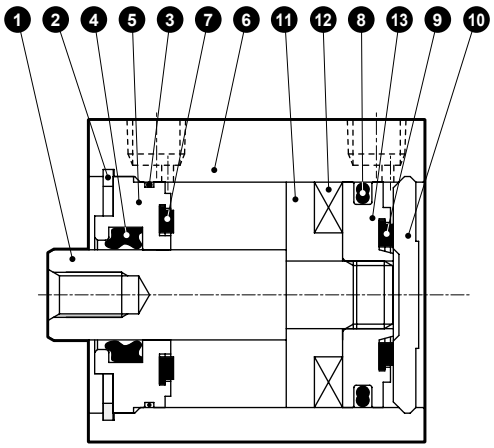

● SSD-L-63D to 100D (double acting/with switch)

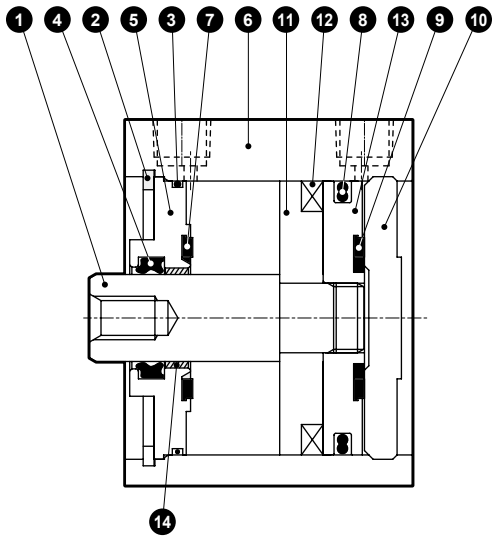

● SSD-40, 50D (double acting)

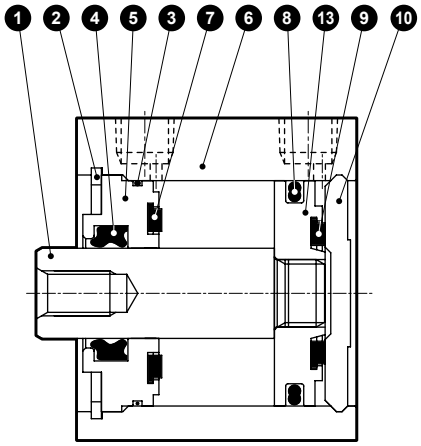

● SSD-63D to 100D (double acting)

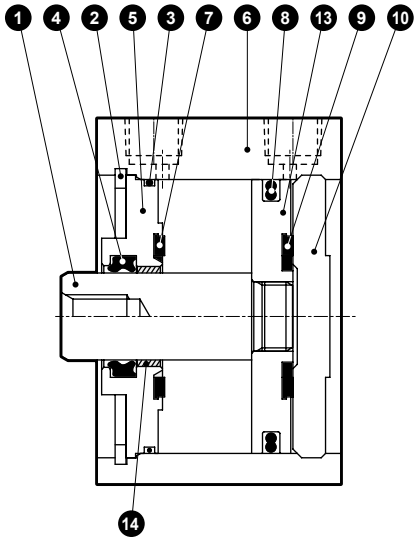

No.	Part name	Material	Remarks
1	Piston rod	Steel	Industrial chrome plating
2	C type snap ring	Steel	Zinc phosphate
3	Rod metal gasket	Nitrile rubber	
4	Rod packing	Nitrile rubber	
5	Rod metal	Aluminum alloy	ø40 to ø50: Alumite ø63 to ø100: Chromate
6	Body	Aluminum alloy	Hard alumite
7	Cushion rubber R	Urethane rubber	

No.	Part name	Material	Remarks
8	Piston packing	Nitrile rubber	
9	Cushion rubber H	Urethane rubber	
10	Cover	Aluminum alloy	Alumite
11	Spacer	Aluminum alloy	Chromate
12	Magnet	Plastic	
13	Piston	Aluminum alloy	Chromate
14	Bush	Oiles drymet	ø63 to ø100

Repair parts list

Bore size (mm)	Kit No.	Repair parts No.
ø40	SSD-40DK	❸ ❹ ❼ ❽ ❾
ø50	SSD-50DK	
ø63	SSD-63DK	
ø80	SSD-80DK	
ø100	SSD-100DK	

Dimensions

● SSD-L-12 to 25 (with switch/TO$^{H}/_{V}$, T5$^{H}/_{V}$, T2$^{H}/_{V}$, T3$^{H}/_{V}$, T2W$^{H}/_{V}$, T3W$^{H}/_{V}$)

ø12/ø16

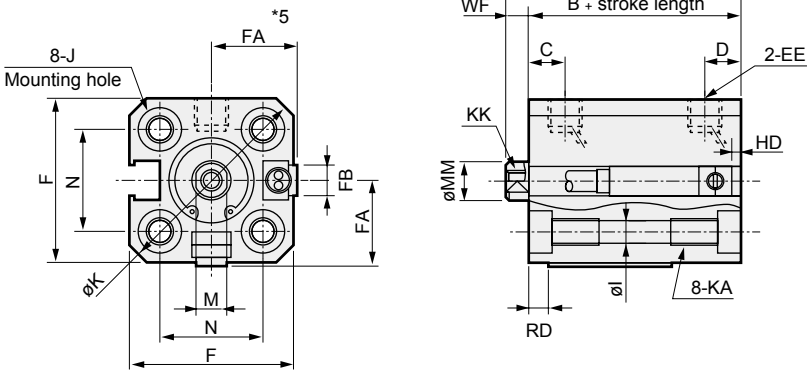

● Rod end male thread

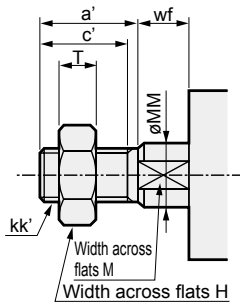

ø20/ø25

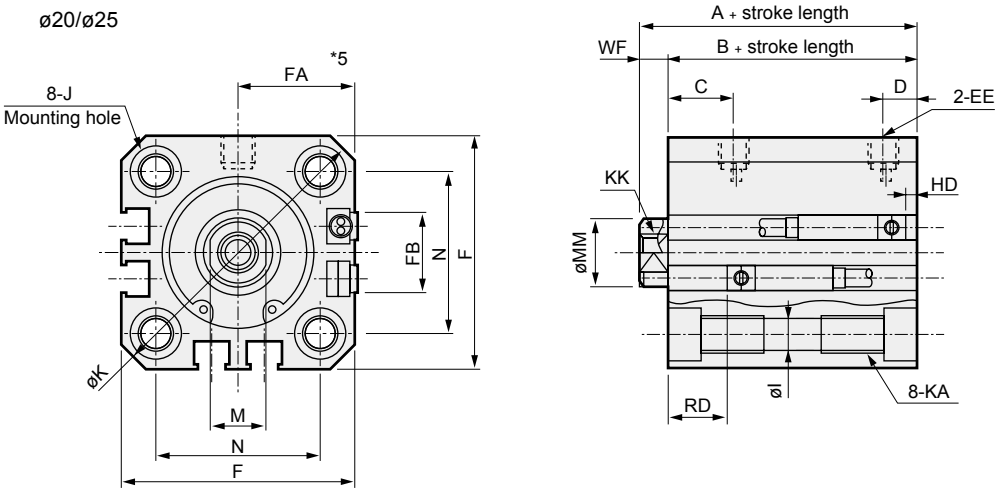

Code / Bore size (mm)	Common dimensions with switch																	
	A *1	B *1	C	D	EE	F	FA *5	FB	I	J	K	KA	KK	M	MM	N	WF
ø12	25.5	22	5.5	5.5	M5	25	13(16.5)	4.5	3.5	6.5 spot face depth 3.5	32	M4 depth 7	M3 depth 6	5	6	15.5	3.5
ø16	25.5	22	5.5	5.5	M5	29	15(18.5)	4.5	3.5	6.5 spot face depth 3.5	38	M4 depth 7	M4 depth 8	6	8	20	3.5
ø20	34	29.5	8	5.5	M5	36	18.5(22)	12.5	5.5	9 spot face depth 5.5	47	M6 depth 11	M5 depth 7	8	10	25.5	4.5
ø25	37.5	32.5	11	6	M5	40	20.5(24)	13.5	5.5	9 spot face depth 5.5	51	M6 depth 11	M6 depth 12	10	12	28	5

Switch dimensions / Bore size (mm)	Reed T0H/T0V, T5H/T5V		Proximity T2H/T2V, T3H/T3V T2WH/T2WV, T3WH/T3WV	
	HD *2	RD *2	HD *2	RD *2
ø12	0	2.5	0	2.5
ø16	0	2	0	2
ø20	3	6.5	3	6.5
ø25	3	9.5	3	9.5

● When the stroke length is 5 mm, dimensions are as below.

Bore size	A + stroke length	B + stroke length
ø12	35.5	32
ø16	35.5	32

*1 : To calculate A+ stroke length or B+ stroke length when using custom stroke length, apply the next longer standard stroke length (instead of the custom stroke length) to the stroke length value.
(Example) If the custom stroke length is 7 mm, apply the standard stroke length of 10 mm.
*2 : When the stroke length is 5 mm for ø12 or ø16 with switch, (A + stroke) length and (B + stroke) length are as shown in the table.
*3 : HD and RD dimensions for 5 mm stroke length differ from these dimensions according to the setting.
4 : Refer to page 1312 for HD, RD and protruding dimensions of the 2-color display, off-delay, AC magnetic field proof, T1 and T8* switches.
*5 : Dimensions in ( ) of FA are for the radial lead wire.
*6 : Refer to pages 1320 to 1325 for dimensions including the accessories and pages 1108 to 1115 for dimensions of individual accessories.

● Rod end male thread

Code / Bore size (mm)	a'	c'	H	kk'	M	MM	T	wf
ø 12	10.5	9	8	M5	5	6	3.2	3.5
ø 16	12	10	10	M6	6	8	3.6	3.5
ø 20	14	12	13	M8	8	10	5	4.5
ø 25	17.5	15	17	M10×1.25	10	12	6	5

SCP*3
CMK2
CMA2
SCM
SCG
SCA2
SCS2
CKV2
CAV2/COVP/N2
SSD2
SSG
SSD
CAT
MDC2
MVC
SMG
MSD/MSDG
FC*
STK
SRL3
SRG3
SRM3
SRT3
MRL2
MRG2
SM-25
ShkAbs
FJ
FK
Spd Contr
Ending

Dimensions

● SSD-12 to 25 (without switch)

ø12/ø16

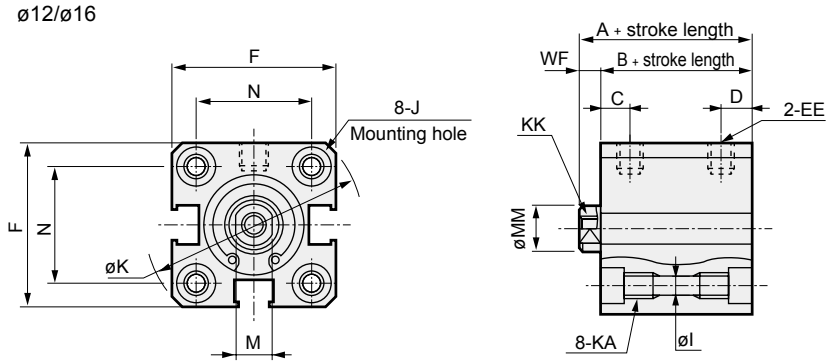

● Rod end male thread

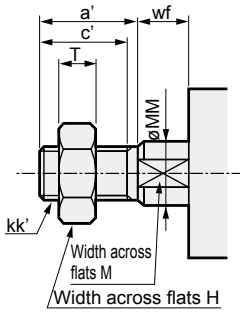

ø20/ø25

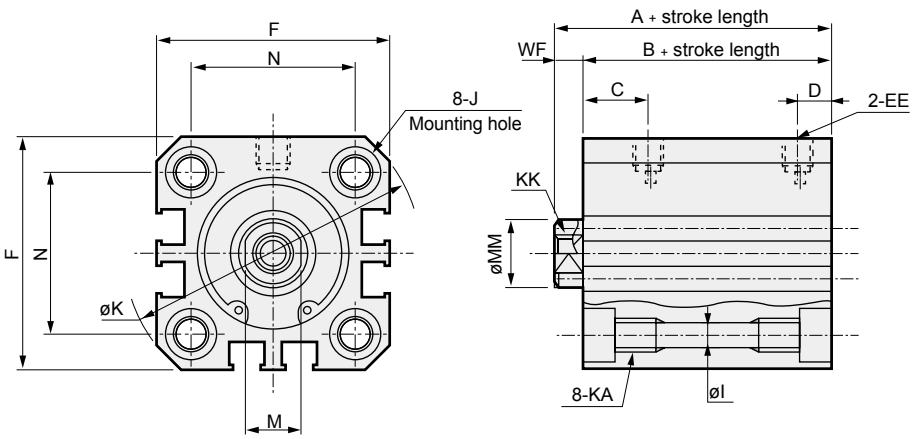

Code / Bore size (mm)	Dimensions without switch and common dimensions														
	A *1	B *1	C	D	EE	F	I	J	K	KA	KK	M	MM	N	WF
ø12	20.5	17	5.5	5.5	M5	25	3.5	6.5 spot face depth 3.5	32	M4 depth 7	M3 depth 6	5	6	15.5	3.5
ø16	20.5	17	5.5	5.5	M5	29	3.5	6.5 spot face depth 3.5	38	M4 depth 7	M4 depth 8	6	8	20	3.5
ø20	24	19.5	8	5.5	M5	36	5.5	9 spot face depth 5.5	47	M6 depth 11	M5 depth 7	8	10	25.5	4.5
ø25	27.5	22.5	11	6	M5	40	5.5	9 spot face depth 5.5	51	M6 depth 11	M6 depth 12	10	12	28	5

● Rod end male thread

Code / Bore size (mm)	a'	c'	H	kk'	M	MM	T	wf
ø 12	10.5	9	8	M5	5	6	3.2	3.5
ø 16	12	10	10	M6	6	8	3.6	3.5
ø 20	14	12	13	M8	8	10	5	4.5
ø 25	17.5	15	17	M10×1.25	10	12	6	5

*1 : To calculate A+ stroke length or B+ stroke length when using custom stroke length, apply the next longer standard stroke length (instead of the custom stroke length) to the stroke length value.
(Example) If the custom stroke length is 7 mm, apply the standard stroke length of 10 mm.
*2 : Refer to pages 1320 to 1325 for dimensions including the accessories and pages 1108 to 1115 for dimensions of individual accessories.

Dimensions

● SSD-L-32 to 100 (with switch/TO$^{H}/_{V}$, T5$^{H}/_{V}$, T2$^{H}/_{V}$, T3$^{H}/_{V}$, T2W$^{H}/_{V}$, T3W$^{H}/_{V}$)

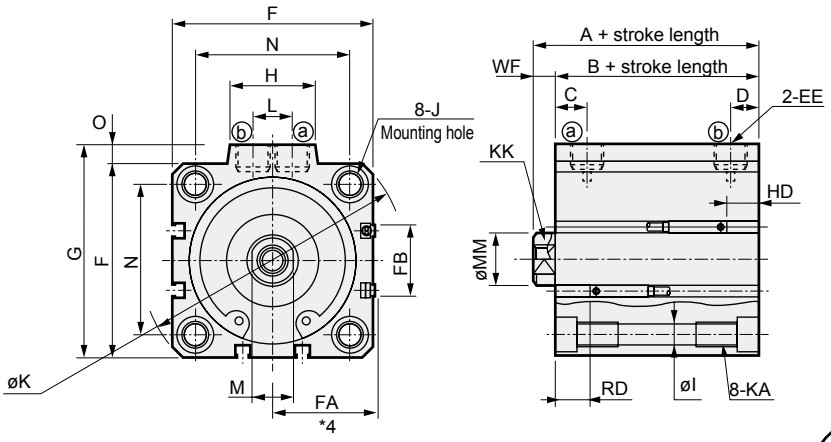

● Rod end male thread

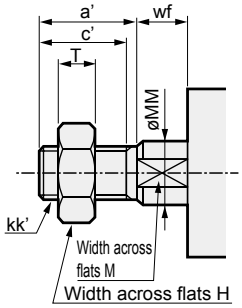

[Bore size ø100]

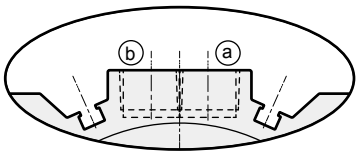

* Only for ø100, the port surface has switch grooves.

● SSD-32 to 100 (without switch)

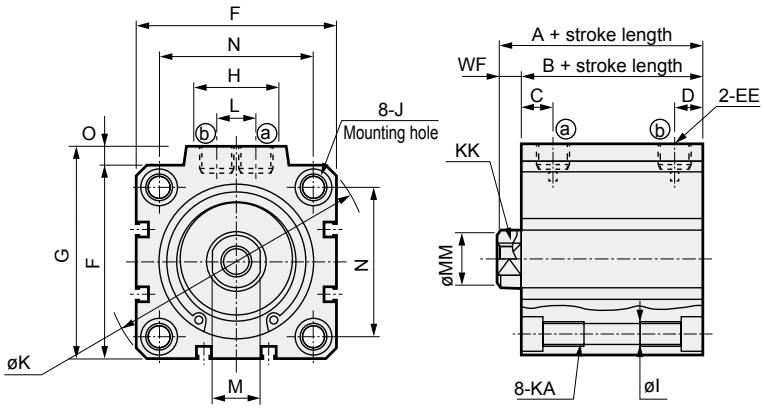

Code / Bore size (mm)	Without switch A *1	Without switch B *1	Common dimensions with switch A *1	B *1	C	D	EE	F	FA *4	FB	G	H	I	J	K	KA	KK	L	M	MM	N	O	WF
ø32	30	23	40	33	8	8	Rc 1/8	45	23(26.5)	20.5	49.5	24	5.5	9 spot face Depth 5.5	60	M6 depth 11	M8 depth 13	10	14	16	34	4.5	7
ø40	36.5	29.5	46.5	39.5	12	8.5	Rc 1/8	52	26.5(30)	27.5	57	24	5.5	9 spot face Depth 5.5	69	M6 depth 11	M8 depth 13	10	14	16	40	5	7
ø50	38.5	30.5	48.5	40.5	10.5	10.5	Rc 1/4	64	32.5(36)	28.5	71	33	6.9	11 spot face Depth 6.5	86	M8 depth 13	M10 depth 15	15	17	20	50	7	8
ø63	44	36	54	46	13	11	Rc 1/4	77	39(42.5)	28.5	84	33	8.7	14 spot face Depth 9	103	M10 depth 25	M10 depth 15	15	17	20	60	7	8
ø80	53.5	43.5	63.5	53.5	16	13	Rc 3/8	98	49.5(53)	28.5	104	38	10.5	17.5 spot face Depth 11	132	M12 depth 28	M16 depth 21	15	22	25	77	6	10
ø100	65	53	75	63	23	15	Rc 3/8	117	59(62.5)	28.5	123.5	38	10.5	17.5 spot face Depth 11	156	M12 depth 28	M20 depth 27	15	27	30	94	6.5	12

Switch dimensions / Bore size (mm)	Reed T0H/T0V, T5H/T5V HD *2	Reed T0H/T0V, T5H/T5V RD *2	Proximity T2H/T2V, T3H/T3V T2WH/T2WV, T3WH/T3WV HD *2	Proximity T2H/T2V, T3H/T3V T2WH/T2WV, T3WH/T3WV RD *2
ø32	3.5	9	3.5	9
ø40	7	12	7	12
ø50	7.5	12.5	7.5	12.5
ø63	12.5	13	12.5	13
ø80	17.5	15.5	17.5	15.5
ø100	23	19.5	23	19.5

*1 : To calculate A+ stroke length or B+ stroke length when using custom stroke length, apply the next longer standard stroke length (instead of the custom stroke length) to the stroke length value. (Example) If the custom stroke length is 7 mm, apply the standard stroke length of 10 mm.
*2 : HD and RD dimensions for 5 mm stroke length differ from these dimensions according to the setting.
3 : Refer to page 1313 for HD, RD and protruding dimensions of the 2-color display, off-delay, AC magnetic field proof, T1 and T8* switches.
*4 : Dimensions in ( ) of FA are for the radial lead wire.
*5 : Refer to pages 1320 to 1325 for dimensions including the accessories and pages 1108 to 1115 for dimensions of individual accessories.

● Rod end male thread

Code / Bore size (mm)	a'	c'	H	kk'	M	MM	T	wf
ø 32	23.5	20.5	22	M14×1.5	14	16	8	5
ø 40	23.5	20.5	22	M14×1.5	14	16	8	5
ø 50	28.5	26	27	M18×1.5	17	20	11	5
ø 63	28.5	26	27	M18×1.5	17	20	11	5
ø 80	35.5	32.5	32	M22×1.5	22	25	13	8
ø100	35.5	32.5	41	M26×1.5	27	30	16	8

SCP*3
CMK2
CMA2
SCM
SCG
SCA2
SCS2
CKV2
CAV2/COVP/N2
SSD2
SSG
SSD
CAT
MDC2
MVC
SMG
MSD/MSDG
FC*
STK
SRL3
SRG3
SRM3
SRT3
MRL2
MRG2
SM-25
ShkAbs
FJ
FK
Spd Contr
Ending

Dimensions CAD

● SSD-L-125 to 160 (double acting/with switch)

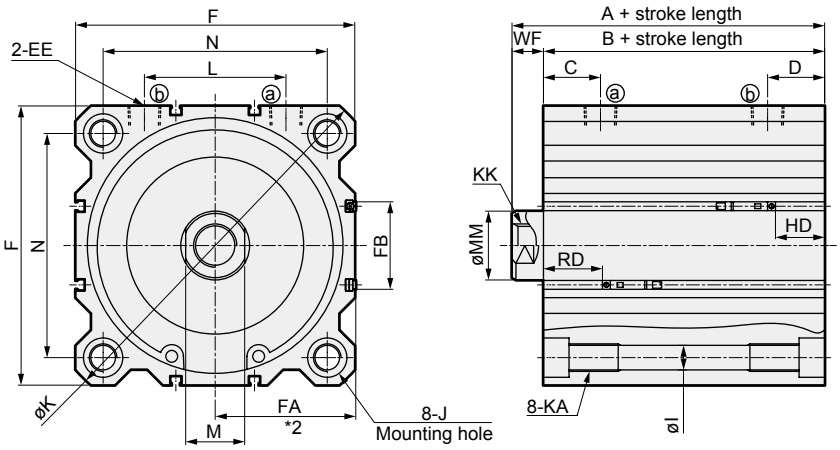

● Rod end male thread

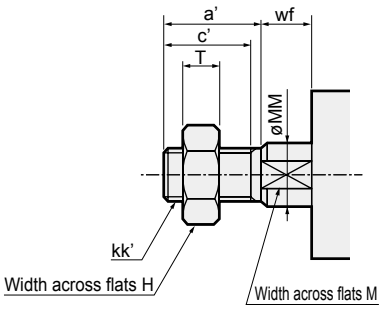

● SSD-125 to 160 (double acting)

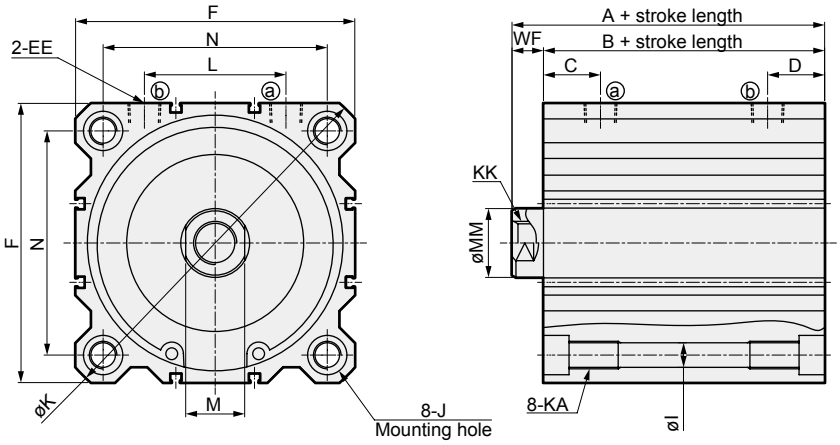

Code	Common dimensions with switch												
Bore size (mm)	A	B	C	D	EE	F	FA	FB	I	J	K	KA	KK
ø125	88	72	23.5	23.5	Rc3/8	142	71.5(75)	44.5	12.5	20 spot face depth 13	190	M14 depth 25	M22 depth 30
ø140	98	82	27	27	Rc3/8	158	79.5(83)	44.5	12.5	20 spot face depth 13	210	M14 depth 25	M22 depth 30
ø160	108	91	30	30	Rc3/8	178	89.5(93)	48.5	14.7	23 spot face depth 15.2	238	M16 depth 28	M24 depth 33

Switch dimensions						Reed T0H/T0V, T5H/T5V		Proximity T2H/T2V, T3H/T3V T2WH/T2WV, T3WH/T3WV	
Bore size (mm)	L	M	MM	N	WF	HD	RD	HD	RD
ø125	72	30	35	114	16	24.5	29.5	24.5	29.5
ø140	80	30	35	128	16	31	33	31	33
ø160	90	36	40	144	17	34	39	34	39

● *1 : Refer to page 1313 for HD and RD dimensions of 2-color display switches.
● *2 : Dimensions in ( ) of FA are for the radial lead wire.
● *3 : Refer to pages 1320 to 1325 for dimensions including the accessories and pages 1108 to 1115 for dimensions of individual accessories.

Dimensions of rod end male thread

Code / Bore size (mm)	a'	c'	H	kk'	M	MM	T	wf
ø125	45	42	46	M30×1.5	30	35	18	13
ø140	45	42	46	M30×1.5	30	35	18	13
ø160	50	47	55	M36×1.5	36	40	21	14

MEMO

SCP*3
CMK2
CMA2
SCM
SCG
SCA2
SCS2
CKV2
CAV2/COVP/N2
SSD2
SSG
SSD
CAT
MDC2
MVC
SMG
MSD/MSDG
FC*
STK
SRL3
SRG3
SRM3
SRT3
MRL2
MRG2
SM-25
ShkAbs
FJ
FK
Spd Contr
Ending

Dimensions (Mounting bracket: LB)

● Mounting bracket Axial foot (LB)

·ø12 to ø32 Material: Steel
Zinc chromate treatment

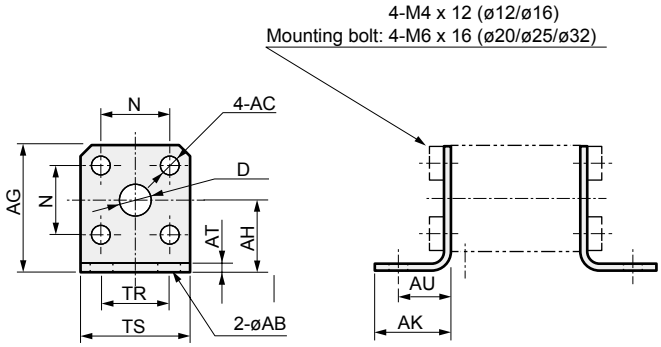

* 8 hexagon socket head cap screws are included for installation. 2 pieces are included in a set.

Model No.	Applicable bore size	AB	AC	AG	AH	AK	AT	AU	D	N	TR	TS	Wt (g)
SSD-LB-12	ø12	6	4.5	29.5	17	18	2.3	12	8	15.5	16	25	40
SSD-LB-16	ø16	6	4.5	33.5	19	18	2.3	12	10	20	16	29	50
SSD-LB-20	ø20	7	6.5	42	24	24	3.2	16	12	25.5	24	36	140
SSD-LB-25	ø25	7	6.5	46	26	24	3.2	16	14	28	28	40	150
SSD-LB-32	ø32	7	6.5	53.5	31	24	3.2	16	18	34	34	45	180

Note) Axial foot (LB) cannot be mounted on SSD-W or SSD-B.

·ø40 to ø100 Material: Steel
Zinc chromate treatment

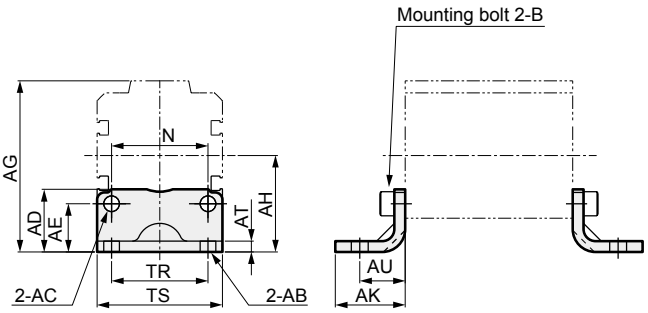

* 4 hexagon socket head cap screws are included for installation. 2 pieces are included in a set.

Model No.	Bore size	AB	AC	AD	AE	AG	AH	AK	AT	AU	B	N	TR	TS	Wt (g)
SSD-LB- 40	ø40	7	6.5	26	20	71	40	29	4.5	19	M6×16	40	40	52	170
SSD-LB- 50	ø50	9	9	23	15	79	40	34	4.5	22	M8×20	50	46	64	270
SSD-LB- 63	ø63	11	11	33	21	96.5	51	40	4.5	25	M10×25	60	60	77	420
SSD-LB- 80	ø80	13	13	42	23	116.5	61.5	50	6	35	M12×40	77	77	98	890
SSD-LB-100	ø100	13	13	48	22	134	69	50	6	35	M12×40	94	94	117	1050

· ø125 to ø160 Material: Steel
Zinc chromate treatment

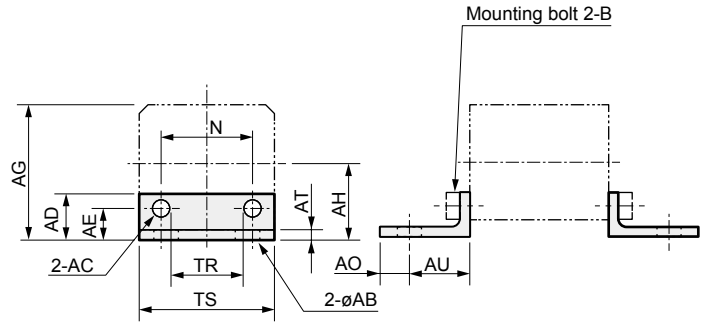

* 4 hexagon socket head cap screws are included for installation. 2 pieces are included in a set.

Model No.	Bore size	AB	AC	AD	AE	AG	AH	AO	AT	AU	B	N	TR	TS	Wt (g)
SSD-LB-125	ø125	19	14.5	43	28	156	85	20	7	45	M14×40	114	100	142	1750
SSD-LB-140	ø140	19	14.5	51	36	179	100	20	8	50	M14×40	128	112	158	2400
SSD-LB-160	ø160	19	16.5	52	34	195	106	20	10	53	M16×50	144	118	178	3500

Dimensions (Mounting bracket: LB2)

● Axial foot (LB2)

· ø12 to ø25 Material: Steel
Zinc chromate treatment

· ø32 to ø100 Material: Steel
Zinc chromate treatment

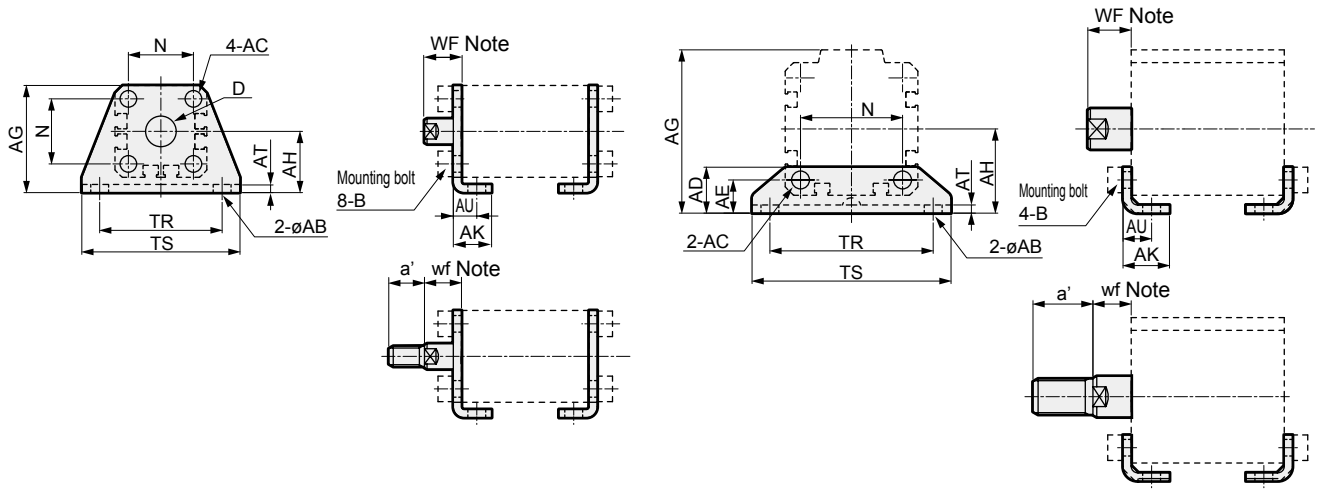

*1: Hex socket mounting bolts are included.

Model No.	Bore size	AB	AC	AD	AE	AG	AH	AK	AT	AU	B	D	N	TR	TS	WF	wf	a'	Wt (g)
SSD-LB2-12	ø12	5	4.5	-	-	29.5	17	12.5	2	8	M4×10	8	15.5	34	44	13.5	13.5	10.5	51
SSD-LB2-16	ø16	5	4.5	-	-	33.5	19	13	2	8	M4×10	10	20	38	48	13.5(18.5)	13.5(18.5)	12	61
SSD-LB2-20	ø20	7	6.5	-	-	42	24	15	3.2	9.2	M6×16	12	25.5	48	62	14.5(19.5)	14.5(19.5)	14	161
SSD-LB2-25	ø25	7	6.5	-	-	46	26	16.5	3.2	10.7	M6×16	14	28	52	66	15(20)	15(20)	17.5	176
SSD-LB2-32	ø32	7	7	18.5	13	57	30	17	3.2	11.2	M6×16	-	34	57	71	17(22)	15(20)	23.5	107
SSD-LB2-40	ø40	7	7	18	13	64	33	18.2	3.2	11.2	M6×16	-	40	64	78	17(22)	15(20)	23.5	121
SSD-LB2-50	ø50	9	9	22	14	78	39	22.7	3.2	14.7	M8×20	-	50	79	95	18(23)	15(20)	28.5	201
SSD-LB2-63	ø63	11	11	26	16	91.5	46	25.2	3.2	16.2	M10×25	-	60	95	113	18(23)	15(20)	28.5	314
SSD-LB2-80	ø80	13	13	31.5	20.5	114	59	30.5	4.5	19.5	M12×40	-	77	118	140	20(25)	18(23)	35.5	678
SSD-LB2-100	ø100	13	13	35	24	136	71	35.5	6	23	M12×40	-	94	137	162	22(27)	18(23)	35.5	1198

*1 : The WF/wf dimension of the cylinder for LB2 is set 10 mm longer than that of standard products. Contact CKD for the cylinder model No. when ordering individual cylinders and LB2 brackets.
*2 : Dimensions in ( ) of WF/wf are dimensions for SSD-G2/G3.

Dimensions (Mounting bracket: FA, FB)

● Rod side flange (FA)

· ø12 to ø25

Material: Steel
Zinc chromate treatment

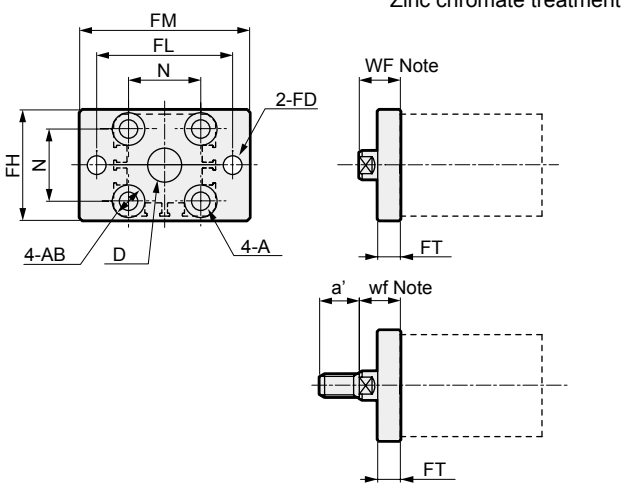

· ø32 to ø100

Material: Steel
Zinc chromate treatment

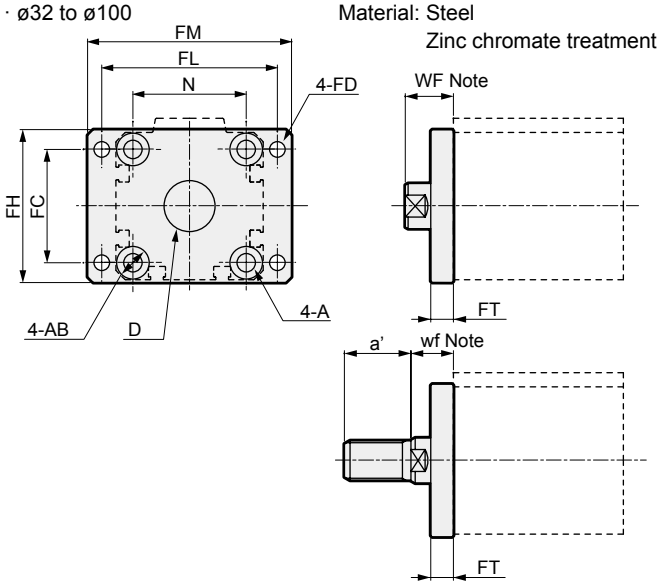

*1: Mounting bolts are included.

Model No.	Bore size	FC	FD	FH	FL	FM	FT	A	AB	D	N	WF	wf	a'	Wt (g)
SSD-FA-12	ø12	-	4.5	25	45	55	5.5	4.5	8.5 spot face depth 2.7	8	15.5	13.5	13.5	10.5	54
SSD-FA-16	ø16	-	4.5	30	45	55	5.5	4.5	8.5 spot face depth 2.7	10	20	13.5(18.5)	13.5(18.5)	12	64
SSD-FA-20	ø20	-	6.6	39	48	60	8	6.5	11.5 spot face depth 3.8	12	25.5	14.5(19.5)	14.5(19.5)	14	129
SSD-FA-25	ø25	-	6.6	42	52	64	8	6.5	11.5 spot face depth 3.8	14	28	15(20)	15(20)	17.5	148
SSD-FA-32	ø32	34	5.5	48	56	65	8	6.5	11.5 spot face depth 3.8	22	34	17(22)	15(20)	23.5	167
SSD-FA-40	ø40	40	5.5	54	62	72	8	6.5	11.5 spot face depth 3.8	28	40	17(22)	15(20)	23.5	215
SSD-FA-50	ø50	50	6.6	67	76	89	9	9	15 spot face depth 5	35	50	18(23)	15(20)	28.5	387
SSD-FA-63	ø63	60	9	80	92	108	9	11	18 spot face depth 6	35	60	18(23)	15(20)	28.5	573
SSD-FA-80	ø80	77	11	99	116	134	11	13	19 spot face depth 7.5	43	77	20(25)	18(23)	35.5	1132
SSD-FA-100	ø100	94	11	117	136	154	11	13	19 spot face depth 7.5	59	94	22(27)	18(23)	35.5	1522

*1: The WF/wf dimension of the cylinder for FA is set 10 mm longer than that of standard products. Contact CKD for the cylinder model No. when ordering individual cylinders and FA brackets.
*2: Dimensions in ( ) of WF/wf are dimensions for SSD-G2/G3.

● Head side flange (FB)

· ø12 to ø25

Material: Steel
Zinc chromate treatment

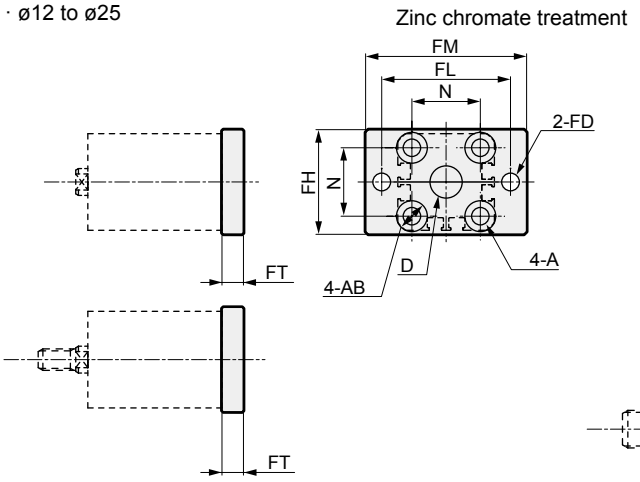

· ø32 to ø100

Material: Steel, zinc chromate treatment

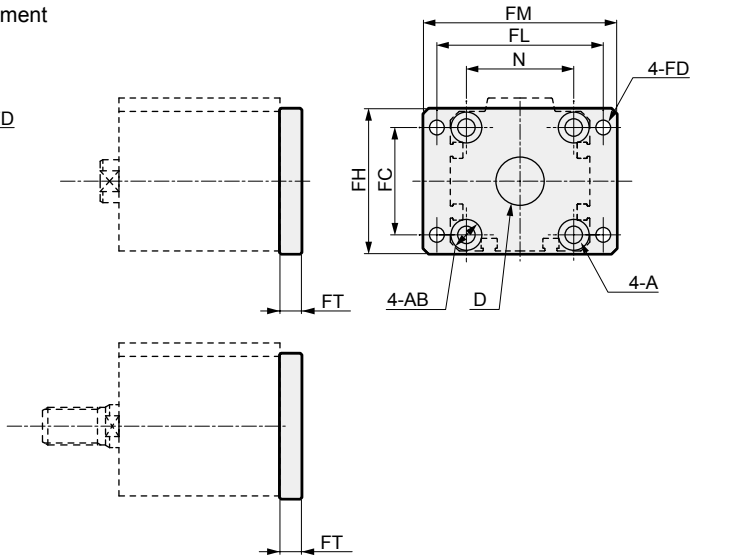

*1: Mounting bolts are included.

Model No.	Bore size	FC	FD	FH	FL	FM	FT	A	AB	D	N	Wt (g)
SSD-FB-12	ø12	-	4.5	25	45	55	5.5	4.5	8.5 spot face depth 2.7	8	15.5	54
SSD-FB-16	ø16	-	4.5	30	45	55	5.5	4.5	8.5 spot face depth 2.7	10	20	64
SSD-FB-20	ø20	-	6.6	39	48	60	8	6.5	11.5 spot face depth 3.8	12	25.5	129
SSD-FB-25	ø25	-	6.6	42	52	64	8	6.5	11.5 spot face depth 3.8	14	28	148
SSD-FB-32	ø32	34	5.5	48	56	65	8	6.5	11.5 spot face depth 3.8	22	34	167
SSD-FB-40	ø40	40	5.5	54	62	72	8	6.5	11.5 spot face depth 3.8	28	40	215
SSD-FB-50	ø50	50	6.6	67	76	89	9	9	15 spot face depth 5	35	50	387
SSD-FB-63	ø63	60	9	80	92	108	9	11	18 spot face depth 6	35	60	573
SSD-FB-80	ø80	77	11	99	116	134	11	13	19 spot face depth 7.5	43	77	1132
SSD-FB-100	ø100	94	11	117	136	154	11	13	19 spot face depth 7.5	59	94	1522

Dimensions (Mounting bracket: CB)

● Mounting bracket Clevis bracket (CB)

* Pin (including C ring) and snap ring are included.
* When used for oscillation, a high load cylinder is recommended.

Note) Clevis bracket (CB) cannot be mounted on SSD-B, SSD-D or SSD-W.

Material: Cast iron
Painting

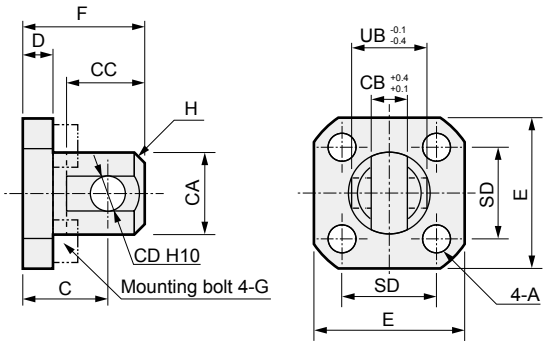

* 4 hexagon socket head cap screws are included for installation.

Model No.	Bore size	A	C	CA	CB	CC	CD	D	E	F	G	H	SD	UB	Wt (g)
SSD-CB-12	ø12	4.5	14	13.5	6.5	13	5	5	25	20	M4×12	C1.5	15.5	12	35
SSD-CB-16	ø16	4.5	15	15	6.5	14	5	5	29	21	M4×12	C2	20	12	45
SSD-CB-20	ø20	6.5	23	24	8	22	10	8	36	33	M6×20	C4	25.5	19	140
SSD-CB-25	ø25	6.5	27	27.5	10	28	12	8	40	39	M6×20	C5	28	21	180

· ø32 to ø100

Material: Cast iron
Painting

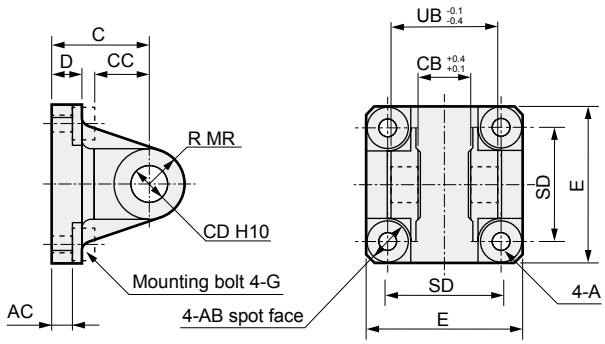

* 4 hexagon socket head cap screws are included for installation.

Model No.	Bore size	A	AB	AC	C	CB	CC	CD	D	E	G	MR	SD	UB	Wt (g)
SSD-CB- 32	ø32	6.5	13	9.5	30	10	16	12	10	45	M6×20	R12	34	21	230
SSD-CB- 40	ø40	6.5	14	6.5	32	18	18	12	10	52	M6×20	R12	40	36	290
SSD-CB- 50	ø50	9	16	6.5	32	18	18	12	10	64	M8×20	R12	50	36	390
SSD-CB- 63	ø63	11	20	7.5	37	20	24	14	10	77	M10×25	R16	60	40	630
SSD-CB- 80	ø80	14	20	10.5	52	28	30	20	14	98	M12×40	R20	77	56	1530
SSD-CB-100	ø100	14	20	10.5	52	28	30	20	16	118	M12×40	R20	94	56	1900

● Clevis bracket (CB)

Material: Cast iron
Painting

· ø125 to ø160

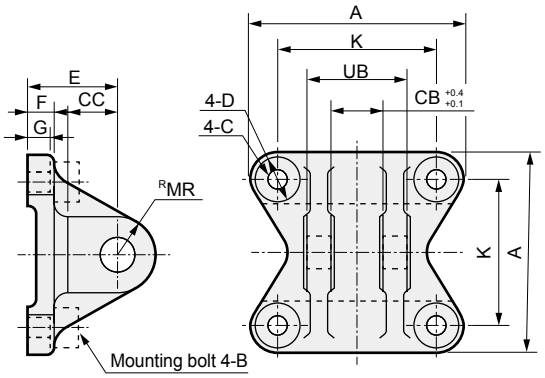

* A pin and a snap ring are included.
* 4 hexagon socket head cap screws are included for installation.

Model No.	Bore size	A	B	C	CB	CC	CD
SSD-CB-125	ø125	140	M14×50	16	32	35	25
SSD-CB-140	ø140	154	M14×50	16	36	40	28
SSD-CB-160	ø160	174	M16×60	18	40	40	32

Model No.	Bore size	D	E	F	G	K	MR	UB	Weight (g)
SSD-CB-125	ø125	23	63	20	18	114	25	64	3000
SSD-CB-140	ø140	23	75	22	20	128	28	72	4200
SSD-CB-160	ø160	26	75	24	22	144	32	80	6000

● Clevis bracket (CB) included pin dimensions table

· ø12 to ø100

Material: Steel
Zinc chromate treatment

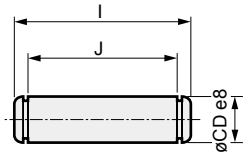

Model No.	Applicable bore size	I	J	CD	Applicable snap ring	Weight (g)
SSD-P-12	ø12	18	13	5	E type 4	2.8
SSD-P-16	ø16	18	13	5	E type 4	2.8
SSD-P-20	ø20	25	20	10	E type 9	17
SSD-P-25	ø25	27	22	12	E type 9	25
SSD-P-32	ø32	27	22	12	E type 9	25
SSD-P-40	ø40	43.5	36.2	12	C type for shaft 12	39
SSD-P-50	ø50	43.5	36.2	12	C type for shaft 12	39
SSD-P-63	ø63	47.5	40.2	14	C type for shaft 14	58
SSD-P-80	ø80	64	56.2	20	C type for shaft 20	156
SSD-P-100	ø100	64	56.2	20	C type for shaft 20	156

· ø125 to ø160

Material: Steel
Zinc chromate treatment

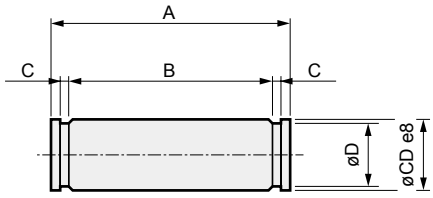

Model No.	Bore size	A	B	C	CD	D	Shaft snap ring	Weight (g)
SSD-P-125	ø125	75	66.3	1.35	25	23.9	C type for shaft 25	250
SSD-P-140	ø140	84	74.7	1.65	28	26.6	C type for shaft 28	400
SSD-P-160	ø160	92	82.7	1.65	32	30.3	C type for shaft 32	500

SCP*3
CMK2
CMA2
SCM
SCG
SCA2
SCS2
CKV2
CAV2/COVP/N2
SSD2
SSG
SSD
CAT
MDC2
MVC
SMG
MSD/MSDG
FC*
STK
SRL3
SRG3
SRM3
SRT3
MRL2
MRG2
SM-25
ShkAbs
FJ
FK
Spd Contr
Ending

Dimensions (Mounting bracket: CB2)

● Clevis bracket (CB2)

· ø12 to ø25

Material: Cast iron
Painting

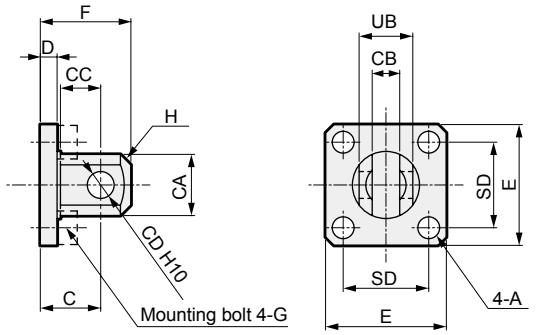

· ø32 to ø100

Material: Cast iron
Painting

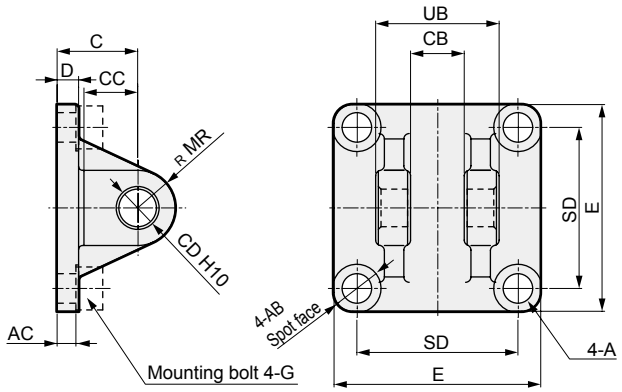

*1: Hex socket mounting bolts, pins (including C rings), and snap rings are included.

Model No.	Bore size	A	AB	AC	C	CA	CB	CC	CD	D	E	F	G	H	MR	SD	UB	Wt (g)
SSD-CB2-12	ø12	4.5	-	-	14	12	$5.2^{+0.2}_{0}$	7	$5^{+0.048}_{0}$	4	25	20	M4×12	C1.5	-	15.5	$10^{-0.1}_{-0.3}$	28
SSD-CB2-16	ø16	4.5	-	-	15	15	$6.6^{+0.3}_{0}$	8	$5^{+0.048}_{0}$	5	29	21	M4×12	C2	-	20	$12^{-0.1}_{-0.4}$	43
SSD-CB2-20	ø20	6.5	-	-	18	20	$8.2^{+0.2}_{0}$	12	$8^{+0.058}_{0}$	5	36	27	M6×16	C4	-	25.5	$16^{-0.1}_{-0.3}$	84
SSD-CB2-25	ø25	6.5	-	-	20	24	$10.2^{+0.2}_{0}$	14	$10^{+0.058}_{0}$	5	40	30	M6×16	C5	-	28	$20^{-0.1}_{-0.3}$	110
SSD-CB2-32	ø32	6.6	13	4.5	20	-	$18.2^{+0.2}_{0}$	14	$10^{+0.058}_{0}$	5	45	30	M6×16	-	10	34	$36^{-0.1}_{-0.3}$	159
SSD-CB2-40	ø40	6.6	14	5	22	-	$18.2^{+0.2}_{0}$	14	$10^{+0.058}_{0}$	6	52	32	M6×16	-	10	40	$36^{-0.1}_{-0.3}$	207
SSD-CB2-50	ø50	9	16	6	28	-	$22.2^{+0.2}_{0}$	20	$14^{+0.070}_{0}$	7	64	42	M8×20	-	14	50	$44^{-0.1}_{-0.3}$	420
SSD-CB2-63	ø63	11	18	7	30	-	$22.2^{+0.2}_{0}$	20	$14^{+0.070}_{0}$	8	77	44	M10×25	-	14	60	$44^{-0.1}_{-0.3}$	605
SSD-CB2-80	ø80	13.5	23	9	38	-	$28.2^{+0.2}_{0}$	27	$18^{+0.070}_{0}$	10	98	56	M12×40	-	18	77	$56^{-0.1}_{-0.3}$	1222
SSD-CB2-100	ø100	13.5	20	12	45	-	$32.2^{+0.2}_{0}$	31	$22^{+0.084}_{0}$	13	117	67	M12×40	-	22	94	$64^{-0.1}_{-0.3}$	2031

● Clevis bracket (CB2) included pin dimensions table (P2)

Material: Steel
Zinc chromate treatment

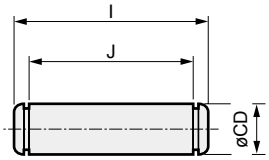

Model No.	Applicable bore size	I	J	CD	Applicable snap ring	Weight (g)
SSD-P2-12	ø12	15.2	10.2	$5^{-0.01}_{-0.028}$	E type 4	2.4
SSD-P2-16	ø16	18	13	$5^{-0.01}_{-0.028}$	E type 4	2.8
SSD-P2-20	ø20	21	16.2	$8^{-0.025}_{-0.047}$	C type for shaft 8	8.2
SSD-P2-25	ø25	25.6	20.2	$10^{-0.025}_{-0.047}$	C type for shaft 10	16
SSD-P2-32	ø32/ø40	41.6	36.2	$10^{-0.025}_{-0.047}$	C type for shaft 10	25
SSD-P2-50	ø50/ø63	50.6	44.2	$14^{-0.032}_{-0.059}$	C type for shaft 14	60
SSD-P2-80	ø80	64	56.2	$18^{-0.032}_{-0.059}$	C type for shaft 18	124
SSD-P2-100	ø100	72	64.2	$22^{-0.040}_{-0.083}$	C type for shaft 22	213

Dimensions (Accessory: I, I2)

● Rod eye (I)

· ø12, ø16, ø40, ø50, ø63, ø80, ø100

Material: ø12 to ø25 Steel
ø32 to ø160 Cast iron
ø12 to ø32
Zinc chromate treatment
ø40 to ø100 Coating

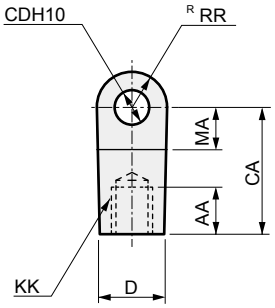

· ø20, ø25, ø32, ø125, ø140, ø160

Material: ø12 to ø25 Steel
ø32 to ø160 Cast iron
ø12 to ø32
Zinc chromate treatment
ø40 to ø100 Coating

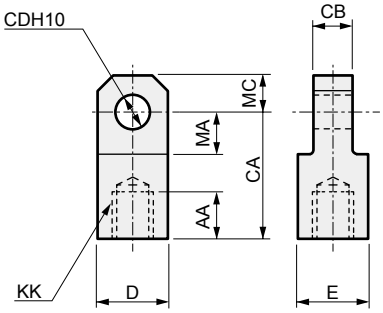

Model No.	Applicable bore size (mm)	AA	CA	CB	CD	D	E	KK	MA	MC	RR	Weight (g)
P2-I-16	12	8	25	$6.4^{0}_{-0.1}$	$5^{+0.048}_{0}$	12	12	M5	14	-	10	21
SSD-I-16	16	8	25	$6.5^{-0.1}_{-0.2}$	$5^{+0.048}_{0}$	12	12	M6	14	-	10	21
SSD-I-20	20	13.5	30	$8^{-0.1}_{-0.2}$	$10^{+0.058}_{0}$	19	19	M8	13	10	-	65
M1-I-30	25	14	36	$10^{-0.1}_{-0.2}$	$12^{+0.070}_{0}$	25	19	M10×1.25	16	12	-	106
SSD-I-32	32	15	36	$10^{-0.1}_{-0.2}$	$12^{+0.070}_{0}$	25	19	M14×1.5	16	12	-	106
SSD-I-40	40	20	50	$18^{-0.1}_{-0.4}$	$12^{+0.070}_{0}$	27	27	M14×1.5	21	-	16	260
SSD-I-50	50	21	50	$18^{-0.1}_{-0.4}$	$12^{+0.070}_{0}$	27	27	M18×1.5	21	-	16	240
SSD-I-63	63	21	50	$20^{-0.1}_{-0.4}$	$14^{+0.070}_{0}$	27	27	M18×1.5	21	-	16	250
SSD-I-80	80	30	70	$28^{-0.1}_{-0.4}$	$20^{+0.084}_{0}$	46	41	M22×1.5	30	-	25	880
SSD-I-100	100	30	70	$28^{-0.1}_{-0.4}$	$20^{+0.084}_{0}$	46	41	M26×1.5	30	-	25	840
SSD-I-125	125/140	50	85	$32^{-0.1}_{-0.4}$	$25^{+0.084}_{0}$	55	55	M30×1.5	32	27.5	-	1250
SSD-I-160	160	60	105	$40^{-0.1}_{-0.4}$	$32^{+0.100}_{0}$	70	70	M36×1.5	40	35	-	2550

● Rod eye (I2)

· ø12 to ø25

Material: Steel
Zinc chromate treatment

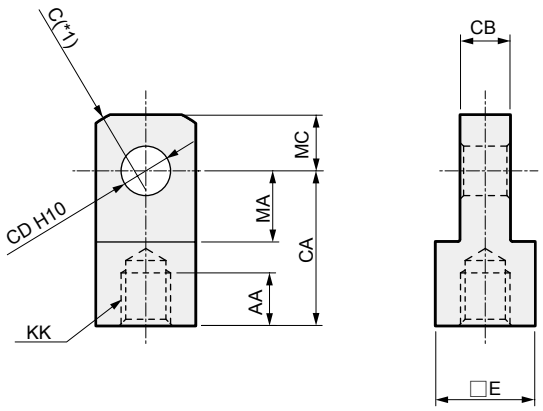

· ø32 to ø100

Material: Cast iron
ø32 Zinc chromate treatment
ø40 to ø100 Coating

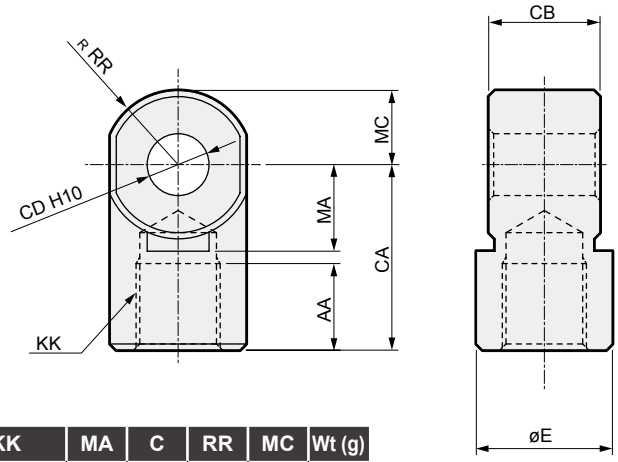

*1: ø20/25 are SR RR

Model No.	Bore size	AA	CA	CB	CD	E	KK	MA	C	RR	MC	Wt (g)
SSD-I2-12	ø12	6	16	$5^{-0.2}_{-0.4}$	$5^{+0.048}_{0}$	□10	M5×0.8	7	2	-	5.5	9
SSD-I2-16	ø16	8	25	$6.5^{-0.2}_{-0.4}$	$5^{+0.048}_{0}$	□12	M6×1	14	2	-	7	21
SSD-I2-20	ø20	8.5	25	$8^{-0.2}_{-0.4}$	$8^{+0.058}_{0}$	□16	M8×1.25	11.5	-	13.4	9	38
SSD-I2-25	ø25	10.5	30	$10^{-0.2}_{-0.4}$	$10^{+0.058}_{0}$	□20	M10×1.25	14	-	17.1	11	71
SSD-I2-32	ø32/ø40	14	30	$18^{-0.3}_{-0.5}$	$10^{+0.058}_{0}$	ø22	M14×1.5	14	-	12	12	74
SSD-I2-50	ø50/ø63	18	40	$22^{-0.3}_{-0.5}$	$14^{+0.070}_{0}$	ø28	M18×1.5	20	-	16	16	155
SSD-I2-80	ø80	21	50	$28^{-0.3}_{-0.5}$	$18^{+0.070}_{0}$	ø38	M22×1.5	27	-	21	21	380
SSD-I2-100	ø100	21	55	$32^{-0.3}_{-0.5}$	$22^{+0.084}_{0}$	ø44	M26×1.5	31	-	24	24	550

Dimensions (Accessory: Y, Y2)

● Rod clevis (Y)

· ø12, ø16, ø40, ø50, ø63, ø80, ø100, ø125, ø140, ø160

· ø20, ø25 Material: ø12 to ø32 Steel
ø40 to ø100 Cast iron
ø12 to ø25
Zinc chromate treatment
ø32 to ø100 Coating

· ø32

* A pin and a snap ring are included.
* AB is thread depth

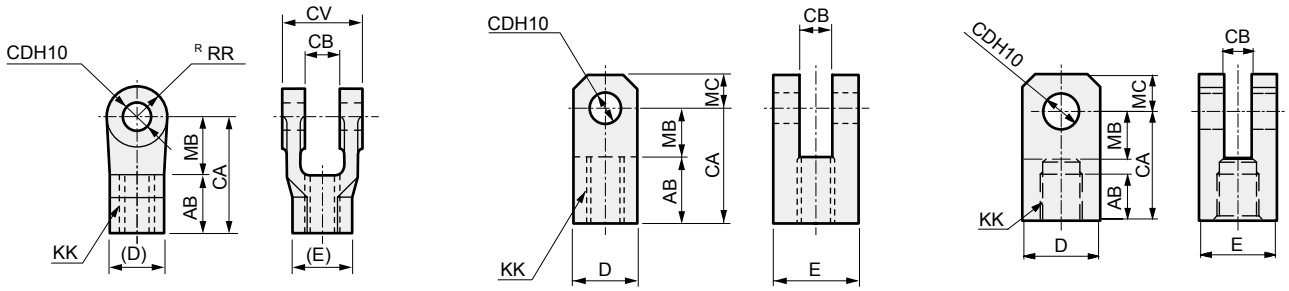

Model No.	Applicable bore size (mm)	AB	CA	CB	CD	CV	D	E	KK	MB	MC	RR	Weight (g)
P2-Y-16	12	11	21	$6.5^{+0.2}_{+0.1}$	$5^{+0.048}_{0}$	12	12	12	M5	10	-	10	20
SSD-Y-16	16	11	21	$6.5^{+0.2}_{+0.1}$	$5^{+0.048}_{0}$	12	12	12	M6	10	-	10	20
SSD-Y-20	20	17	30	$8^{+0.3}_{+0.1}$	$10^{+0.058}_{0}$	19	19	19	M8	13	10	-	100
M1-Y-30	25	20	36	$10^{+0.3}_{+0.1}$	$12^{+0.070}_{0}$	25	25	25	M10×1.25	16	12	-	197
SSD-Y-32	32	15	36	$10^{+0.3}_{+0.1}$	$12^{+0.070}_{0}$	25	25	25	M14×1.5	16	12	-	197
SSD-Y-40	40	24	50	$18^{+0.4}_{+0.1}$	$12^{+0.070}_{0}$	36	(27)	(31.2)	M14×1.5	26	-	16	250
SSD-Y-50	50	24	50	$18^{+0.4}_{+0.1}$	$12^{+0.070}_{0}$	36	(27)	(31.2)	M18×1.5	26	-	16	240
SSD-Y-63	63	24	50	$20^{+0.4}_{+0.1}$	$14^{+0.070}_{0}$	40	(27)	(31.2)	M18×1.5	26	-	16	260
SSD-Y-80	80	35	70	$28^{+0.4}_{+0.1}$	$20^{+0.084}_{0}$	56	(41)	(47.3)	M22×1.5	35	-	25	900
SSD-Y-100	100	35	70	$28^{+0.4}_{+0.1}$	$20^{+0.084}_{0}$	56	(41)	(47.3)	M26×1.5	35	-	25	850
SSD-Y-125	125/140	50	85	$32^{+0.4}_{+0.1}$	$25^{+0.084}_{0}$	64	(46)	(53.1)	M30×1.5	35	-	27.5	1300
SSD-Y-160	160	60	105	$40^{+0.4}_{+0.1}$	$32^{+0.100}_{0}$	80	(55)	(63.5)	M36×1.5	45	-	35	2550

● Rod clevis (Y2)

· ø12 to ø25

· ø32 to ø100 Material: ø12 to ø32 Steel
ø40 to ø100 Cast iron
ø12 to ø25
Zinc chromate treatment
ø32 to ø100 Coating

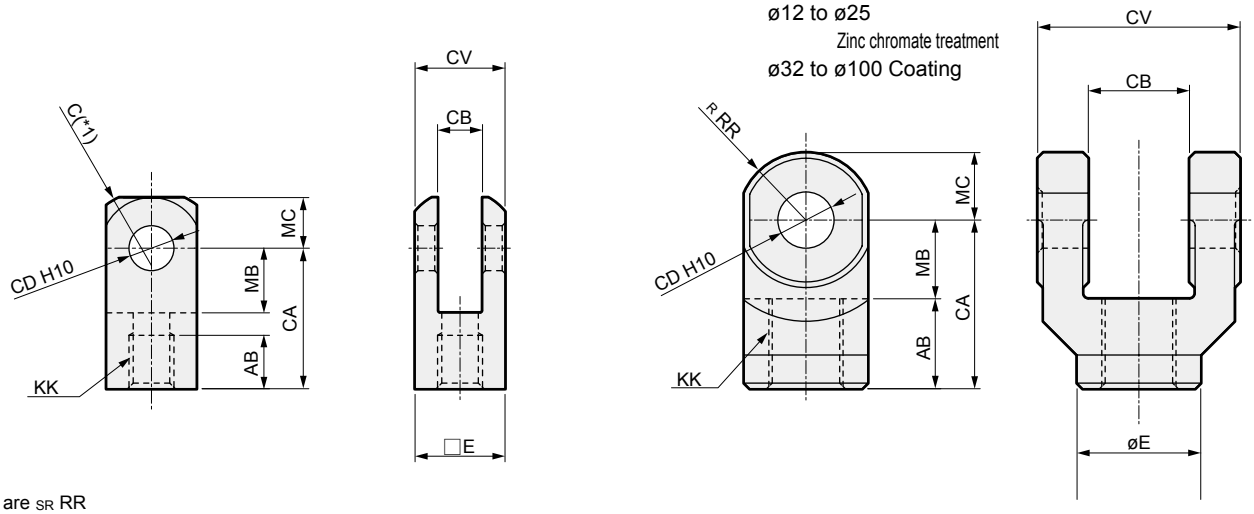

*1: ø20/25 are SR RR
*2: A pin and a snap ring are included.

Model No.	Bore size	AB	CA	CB	CD	CV	E	KK	MB	C	RR	MC	Wt (g)
SSD-Y2-12	ø12	6	16	$5^{+0.4}_{+0.2}$	$5^{+0.048}_{0}$	10	□10	M5×0.8	7	2	-	5.5	12
SSD-Y2-16	ø16	11	21	$6.5^{+0.4}_{+0.2}$	$5^{+0.048}_{0}$	12	□12	M6×1	10	2	-	7	20
SSD-Y2-20	ø20	13.5	25	$8^{+0.4}_{+0.2}$	$8^{+0.058}_{0}$	16	□16	M8×1.25	11.5	-	13.4	9	45
SSD-Y2-25	ø25	16	30	$10^{+0.4}_{+0.2}$	$10^{+0.058}_{0}$	20	□20	M10×1.25	14	-	17.1	11	84
SSD-Y2-32	ø32/ø40	16	30	$18^{+0.5}_{+0.3}$	$10^{+0.058}_{0}$	36	ø22	M14×1.5	14	-	12	12	120
SSD-Y2-50	ø50/ø63	20	40	$22^{+0.5}_{+0.3}$	$14^{+0.070}_{0}$	44	ø28	M18×1.5	20	-	16	16	257
SSD-Y2-80	ø80	23	50	$28^{+0.5}_{+0.3}$	$18^{+0.070}_{0}$	56	ø38	M22×1.5	27	-	21	21	589
SSD-Y2-100	ø100	24	55	$32^{+0.5}_{+0.3}$	$22^{+0.084}_{0}$	64	ø44	M26×1.5	31	-	24	24	933

Dimensions (Accessory: P, P2)

● Rod clevis (Y) pin (P)

· ø12, ø16, ø40 to ø160

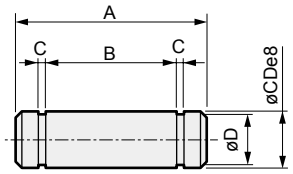

· ø20 to ø32

Material: Steel
Zinc chromate treatment

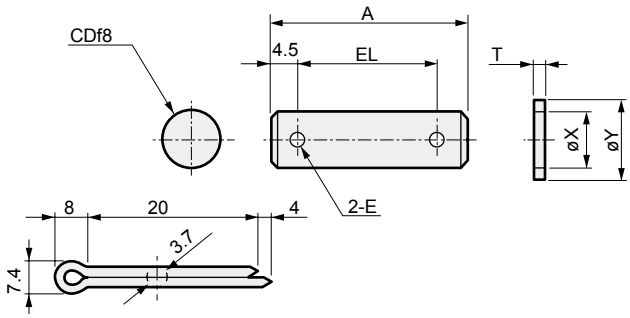

Model No.	Applicable bore size (mm)	A	B	C	D	CD	E	EL	T	X	Y	Applicable snap ring pin	Wt (g)
P2-P-16	12/16	18	13	0.7	4	$5^{-0.010}_{-0.028}$	-	-	-	-	-	E type snap ring 4	3.0
M1-P-20	20	37	-	-	-	$10^{-0.013}_{-0.035}$	4	28	2	10.5	18	Split pin	29
M1-P-30	25/32	46	-	-	-	$12^{-0.018}_{-0.043}$	4	37	2.5	13	21	Split pin	50
S1-P-40	40/50	43.5	36.2	1.15	11.5	$12^{-0.032}_{-0.059}$	-	-	-	-	-	C type for shaft 12	40
S1-P-63	63	47.5	40.2	1.15	13.4	$14^{-0.032}_{-0.059}$	-	-	-	-	-	C type for shaft 14	60
S1-P-80	80/100	64	56.2	1.35	19	$20^{-0.040}_{-0.073}$	-	-	-	-	-	C type for shaft 20	160
SCS2-125-P	125/140	75	66.3	1.35	23.9	$25^{-0.040}_{-0.073}$	-	-	-	-	-	C type for shaft 25	250
SCS2-160-P	160	92	82.7	1.65	30.3	$32^{-0.050}_{-0.089}$	-	-	-	-	-	C type for shaft 32	500

● The pins for the rod clevis (Y2) are common with the pins (P2) for the clevis brackets (CB2). Refer to page 1112 for dimensions.

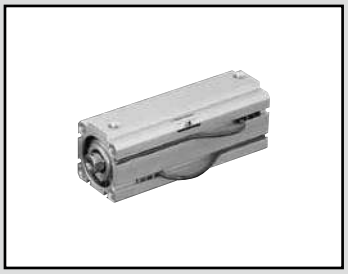

Compact cylinder double acting/single rod/high load

SSD-K Series

● Bore size: ø12/ø16/ø20/ø25/ø32/ø40/ø50/ø63/ø80/ø100

JIS symbol

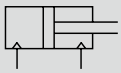

RoHS CAD

Specifications

Item	SSD-K SSD-KL (with switch)									
Bore size mm	ø12	ø16	ø20	ø25	ø32	ø40	ø50	ø63	ø80	ø100
Actuation	Double acting									
Working fluid	Compressed air									
Max. working pressure MPa	1.0 (≈150 psi, 10 bar)									
Min. working pressure MPa	0.1 (≈15 psi, 1 bar)							0.05 (≈7.3 psi, 0.5 bar)		
Proof pressure MPa	1.6 (≈230 psi, 16 bar)									
Ambient temperature °C	-10 (14°F) to 60 (140°F) (no freezing)									
Port size	M5				Rc 1/8		Rc 1/4		Rc 3/8	
Stroke tolerance mm	+2.0 0									
Working piston speed mm/s	50 to 500							50 to 300		
Cushion	Rubber cushion									
Lubrication	Not required (use turbine oil ISO VG32 if necessary for lubrication)									
Allowable absorbed energy J	0.04	0.09	0.16	0.16	0.40	0.63	0.98	1.56	2.51	3.92

Stroke length

Bore size (mm)	Standard stroke length (mm)	Max. stroke length (mm)	Min. stroke length (mm)
ø12	5, 10, 15, 20, 25, 30, 40, 50	*2) 100	1
ø16			
ø20		*2) 200	
ø25	10, 15, 20, 25, 30, 40 50, 60, 70, 80, 90, 100	*2) 300	
ø32			
ø40			
ø50			
ø63	10, 20, 30, 40, 50 60, 70, 80, 90, 100		
ø80			
ø100			

*1) The custom stroke length is available in 1 mm increments. However, the total length is the same as that of the next longer standard stroke length.
*2) Stroke length over standard to maximum is available in increments of 10.
(Example) ø16: 60, 70, 80, 90, 100
*3) From 101 to 200 for ø20, 151 to 300 for ø25 to ø50, or 201 to 300 for ø63 to ø100, internal structure and total length are different in some products.
*4) For the type with switch, refer to the table on the following page of installed switch numbers and minimum stroke length.
*5) Refer to pages 1320 and 1321 for the min. stroke length with mounting brackets LB and LB2.

Clean-room specifications (Catalog No. CB-033SA)

● Anti-dust generation structure for use in cleanrooms

SSD-K..... **P7***

SSD-K..... **P5***

Oil-prohibited specifications (Ending Page 132)

● Grease splash prevented

SSD-K..... **P12**

Specifications for rechargeable battery (catalog No. CC-1226A)

● Design compatible with rechargeable battery manufacturing process

SSD-K..... **P4***

Custom stroke length

● SSD-K Series

Item	Standard products Standard stroke length body with spacer		Optional products Dedicated unit (-S)	
Model No.	Refer to How to order.		Add "-S" option code to the model No.	
Description	A spacer is added to the standard stroke length body to adjust the stroke length in 1 mm increments.		Dedicated units of the required stroke length are available.	
Stroke range	Bore size	Stroke range	Bore size	Stroke range
	12 to 20	1 to 49	12/16	6 (11) to 100 (*1)
			20	6 to 200
	25 to 100	1 to 99	25 to 100	11 to 300
Example of model No.	Model No.: SSD-K-32-81 A +9 mm spacer is added to the SSD-K-32-90 standard cylinder to create 90 mm stroke length. B dimension is 123mm.		Model No.: SSD-K-32-81-S Dedicated units for 81 mm stroke length are available. B dimension is 114mm.	

*1) The value in ( ) is for type with switch.

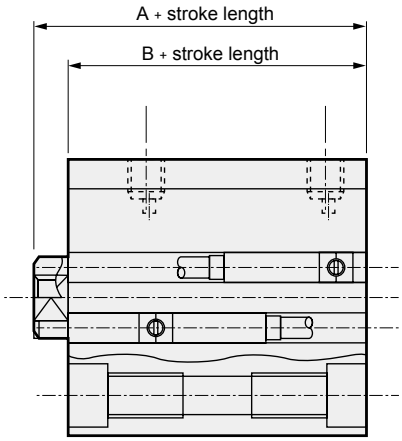

Number of installed switches and min. stroke length (mm)

Switch quantity	1	2	3	4	5
Switch model No. / Bore size (mm)	T*	T*	T*	T*	T*
ø12	5	5	25	-	-
ø16	5	5	25	-	-
ø20	5	5	35	50	65
ø25	5	5	35	50	65
ø32	5	5	35	50	65
ø40	5	5	35	50	65
ø50	5	5	35	50	65
ø63	5	5	35	50	65
ø80	5	5	35	50	65
ø100	5	5	35	50	65

Note: Less than 10 mm with the 2-color display, off-delay, AC magnetic field proof, T1* or T8* switch is not available.

Switch specifications

● 1-color/2-color display/for AC magnetic field proof

Item	Proximity 2-wire				Proximity 3-wire				Reed 2-wire							Proximity 2-wire
	T1H/ T1V	T2H/T2V/ T2JH/T2JV	T2YH/ T2YV	T2WH/ T2WV	T3H/ T3V	T3PH/ T3PV	T3YH/ T3YV	T3WH/ T3WV	T0H/T0V	T5H/T5V		T8H/T8V				T2YD (*4) T2YDT
Applications	For programmable controller, relay, compact solenoid valve	Dedicated for programmable controller			For programmable controller, relay				For programmable controller, relay	For programmable controller, relay (no lamp), serial		For programmable controller, relay				Dedicated for programmable controller
Output method	-				NPN output	PNP output	NPN output	NPN output	-							
Pwr. supp. V.	-				10 to 28 VDC				-							
Load voltage	85 to 265 VAC	10 to 30 VDC		24 VDC ±10%	30 VDC or less				12/24 VDC	100/110 VAC	5/12/24 VDC	100/110 VAC	12/24 VDC	110 VAC	220 VAC	24 VDC ±10%
Load current	5 to 100 mA	5 to 20 mA (*3)			100 mA or less		50 mA or less		5 to 50 mA	7 to 20 mA	50 mA or less	20 mA or less	5 to 50 mA	7 to 20 mA	7 to 10 mA	5 to 20 mA
Indicator lamp	LED (Lit when ON)	LED (Lit when ON)	Red/green LED (Lit when ON)	Red/green LED (Lit when ON)	LED (Lit when ON)	Yellow LED (Lit when ON)	Red/green LED (Lit when ON)	Red/green LED (Lit when ON)	LED (Lit when ON)		Without indicator lamp		LED (Lit when ON)			Red/green LED (Lit when ON)
Leakage current	≤ 1 mA at 100 VAC, ≤ 2 mA at 200 VAC	1 mA or less			10 μA or less				0 mA							1 mA or less
Weight g	1 m:33 3 m:87 5 m:142	1 m:18 3 m:49 5 m:80	1 m:33 3 m:87 5 m:142	1 m:18 3 m:49 5 m:80	1 m:18 3 m:49 5 m:80		1 m:33 3 m:87 5 m:142	1 m:18 3 m:49 5 m:80	1 m:18 3 m:49 5 m:80			1 m:33 3 m:87 5 m:142				1 m:61 3 m:166 5 m:272

*1 : Refer to Ending Page 1 for detailed switch specifications and dimensions.
*2 : Switches other than the above models, such as switches with connectors, are also available. Refer to Ending Page 1.
*3 : The max. load current is 20 mA at 25°C. The current is lower than 20 mA if the operating ambient temperature around the switch is higher than 25°C. (5 to 10 mA at 60°C)
*4 : Switch for AC magnetic field (T2YD/T2YDT) cannot be used in DC magnetic field.

Theoretical thrust table

(Unit: N)

Bore size (mm)	Operating direction	Working pressure MPa											
		0.05	0.1	0.15	0.2	0.3	0.4	0.5	0.6	0.7	0.8	0.9	1.0
ø12	Push	-	11.3	17.0	22.6	33.9	45.2	56.5	67.9	79.2	90.5	1.02×10^2	1.13×10^2
	Pull	-	8.48	12.7	17.0	25.4	33.9	42.4	50.9	59.4	67.9	76.3	84.8
ø16	Push	-	20.1	30.2	40.2	60.3	80.4	1.01×10^2	1.21×10^2	1.41×10^2	1.61×10^2	1.81×10^2	2.01×10^2
	Pull	-	15.1	22.6	30.2	45.2	60.3	75.4	90.5	1.06×10^2	1.21×10^2	1.36×10^2	1.51×10^2
ø20	Push	-	31.4	47.1	62.8	94.2	1.26×10^2	1.57×10^2	1.88×10^2	2.20×10^2	2.51×10^2	2.83×10^2	3.14×10^2
	Pull	-	23.6	35.3	47.1	70.7	94.2	1.18×10^2	1.41×10^2	1.65×10^2	1.88×10^2	2.12×10^2	2.36×10^2
ø25	Push	-	49.1	73.6	98.2	1.47×10^2	1.96×10^2	2.45×10^2	2.95×10^2	3.44×10^2	3.93×10^2	4.42×10^2	4.91×10^2
	Pull	-	37.8	56.7	75.6	1.13×10^2	1.51×10^2	1.89×10^2	2.27×10^2	2.64×10^2	3.02×10^2	3.40×10^2	3.78×10^2
ø32	Push	-	80.4	1.21×10^2	1.61×10^2	2.41×10^2	3.22×10^2	4.02×10^2	4.83×10^2	5.63×10^2	6.43×10^2	7.24×10^2	8.04×10^2
	Pull	-	60.3	90.5	1.21×10^2	1.81×10^2	2.41×10^2	3.02×10^2	3.62×10^2	4.22×10^2	4.83×10^2	5.43×10^2	6.03×10^2
ø40	Push	-	1.26×10^2	1.88×10^2	2.51×10^2	3.77×10^2	5.03×10^2	6.28×10^2	7.54×10^2	8.80×10^2	1.01×10^3	1.13×10^3	1.26×10^3
	Pull	-	1.06×10^2	1.58×10^2	2.11×10^2	3.17×10^2	4.22×10^2	5.28×10^2	6.33×10^2	7.39×10^2	8.44×10^2	9.50×10^2	1.06×10^3
ø50	Push	-	1.96×10^2	2.95×10^2	3.93×10^2	5.89×10^2	7.85×10^2	9.82×10^2	1.18×10^3	1.37×10^3	1.57×10^3	1.77×10^3	1.96×10^3
	Pull	-	1.65×10^2	2.47×10^2	3.30×10^2	4.95×10^2	6.60×10^2	8.25×10^2	9.90×10^2	1.15×10^3	1.32×10^3	1.48×10^3	1.65×10^3
ø63	Push	1.56×10^2	3.12×10^2	4.68×10^2	6.23×10^2	9.35×10^2	1.25×10^3	1.56×10^3	1.87×10^3	2.18×10^3	2.49×10^3	2.81×10^3	3.12×10^3
	Pull	1.40×10^2	2.80×10^2	4.20×10^2	5.61×10^2	8.41×10^2	1.12×10^3	1.40×10^3	1.68×10^3	1.96×10^3	2.24×10^3	2.52×10^3	2.80×10^3
ø80	Push	2.51×10^2	5.03×10^2	7.54×10^2	1.01×10^3	1.51×10^3	2.01×10^3	2.51×10^3	3.02×10^3	3.52×10^3	4.02×10^3	4.52×10^3	5.03×10^3
	Pull	2.27×10^2	4.54×10^2	6.80×10^2	9.07×10^2	1.36×10^3	1.81×10^3	2.27×10^3	2.72×10^3	3.17×10^3	3.63×10^3	4.08×10^3	4.54×10^3
ø100	Push	3.93×10^2	7.85×10^2	1.18×10^3	1.57×10^3	2.36×10^3	3.14×10^3	3.93×10^3	4.71×10^3	5.50×10^3	6.28×10^3	7.07×10^3	7.85×10^3
	Pull	3.57×10^2	7.15×10^2	1.07×10^3	1.43×10^3	2.14×10^3	2.86×10^3	3.57×10^3	4.29×10^3	5.00×10^3	5.72×10^3	6.43×10^3	7.15×10^3

How to order

Without switch (without magnet for switch)

SSD-K - 12 ◯ - 5 ———— N - LB - I

With switch (built-in magnet for switch)

SSD-KL - 12 ◯ - 5 - T0H - R - N - LB - I

Ⓐ Bore size

Ⓑ Port thread

Ⓒ Stroke length

Ⓓ Switch model No. *1 *2 *9

Ⓔ Switch quantity

Ⓕ Option *3

Ⓖ Mounting bracket *4 *5

Ⓗ Accessory *6

Code	Description
Ⓐ Bore size (mm)	
12	ø12
16	ø16
20	ø20
25	ø25
32	ø32
40	ø40
50	ø50
63	ø63
80	ø80
100	ø100

Ⓑ Port thread

Blank	Rc thread
NN	NPT thread (ø32 and over) (made-to-order product)
GN	G thread (ø32 and over) (made-to-order product)

Ⓒ Stroke length (mm)

Refer to the stroke length table on the following page.

Ⓓ Switch model No.

Axial lead wire	Radial lead wire	Contact	Voltage AC	Voltage DC	Display	Lead wire
TOH*	T0V*	Reed	●	●	1-color display	2-wire
T5H*	T5V*	Reed	●	●	Without indicator lamp	2-wire
T8H*	T8V*	Reed	●	●	1-color display	2-wire
T1H*	T1V*	Proximity	●		1-color display	2-wire
T2H*	T2V*	Proximity		●	1-color display	2-wire
T3H*	T3V*	Proximity		●	1-color display	3-wire
T3PH*	T3PV*	Proximity		●	1-color display	3-wire
T2WH*	T2WV*	Proximity		●	2-color display	2-wire
T2YH*	T2YV*	Proximity		●	2-color display	2-wire
T3WH*	T3WV*	Proximity		●	2-color display	3-wire
T3YH*	T3YV*	Proximity		●	2-color display	3-wire
T2JH*	T2JV*	Proximity		●	1-color display off-delay	2-wire
T2YD*	-	Proximity		●	2-color display AC magnetic field	2-wire
T2YDT*	-	Proximity		●	2-color display AC magnetic field	2-wire
T2HR3	T2VR3	Proximity		●	1-color display (bend resist lead wire specs)	2-wire

*** Lead wire length**

Blank	1 m (standard)
3	3 m (option)
5	5 m (option)

Ⓔ Switch quantity

R	1 on rod side
H	1 on head side
D	2

Ⓕ Option

Bore size (ø)	
Blank	Rod end female thread
N	Rod end male thread
S	Dedicated unit for custom stroke length
M	Piston rod material (stainless steel)
P6	Copper and PTFE free (for ø12, ø16, copper and PTFE free is provided as standard)

Ⓖ Mounting bracket

LB	Axial foot
LB2	Axial foot (compact)
CB	Clevis bracket (pin and snap ring included)
CB2	Clevis bracket (compact) (pin and snap ring included)
FA	Rod side flange
FB	Head side flange

Ⓗ Accessory (available when rod end male thread "N" is selected)

I	Rod eye
I2	Rod eye (compact)
Y	Rod clevis (pin and snap ring included)
Y2	Rod clevis (compact) (pin and snap ring included)

⚠ Precautions for model No. selection

*1 : Switches other than Ⓓ Switch model No. are also available. (Made to order) Refer to Ending Page 1 for details.
2 : AC magnetic field proof switch and T8 switch cannot be installed on ø12 and ø16.
*3 : Piston rod of ø12 to ø25 is stainless steel as standard. C type snap ring is stainless steel instead of steel. The rod end male thread nut is stainless steel.
*4 : The mounting bracket is included at shipment.
*5 : The projection dimension of piston rod WF when LB2 or FA is selected is different from that of the standard. Refer to the dimensions on pages 1109 and 1110. The number of the specified protruding dimension will be added at the end of the model No. printed on the metal plate on the body.
*6 : "I" and "Y" cannot be selected together.
*7 : Refer to Ending Page 85 for custom specifications of rod end form.
*8 : Refer to pages 1088 and 1089 for combinations of variations/options.
*9 : Switches are shipped with the product. Contact CKD if assembling before shipment is necessary.

[Example of model No.]

SSD-KL-12-5-T0H-R-N

Model: Compact cylinder High load

Ⓐ Bore size : ø12 mm
Ⓑ Port thread : Rc thread
Ⓒ Stroke length : 5 mm
Ⓓ Switch model No. : Reed T0H switch
· Lead wire 1 m
Ⓔ Switch quantity : 1 on rod side
Ⓕ Option : Rod end male thread

[Stroke length table]

Stroke length (mm)		Applicable bore size									
		ø12	ø16	ø20	ø25	ø32	ø40	ø50	ø63	ø80	ø100
Standard stroke length	5	●	●	●							
	10	●	●	●	●	●	●	●	●	●	●
	15	●	●	●	●	●	●	●			
	20	●	●	●	●	●	●	●	●	●	●
	25	●	●	●	●	●	●	●			
	30	●	●	●	●	●	●	●	●	●	●
	40	●	●	●	●	●	●	●	●	●	●
	50	●	●	●	●	●	●	●	●	●	●
	60				●	●	●	●	●	●	●
	70				●	●	●	●	●	●	●
	80				●	●	●	●	●	●	●
	90				●	●	●	●	●	●	●
	100				●	●	●	●	●	●	●
Min. stroke length (mm) *1		1									
Max. stroke length (mm)		100		200	300						
Custom stroke length *2		In 1 mm increments									

1 : Less than 5 mm with 1-color display switch and less than 10 mm with the 2-color display, off-delay, AC magnetic field proof, T1 or T8* switch are not available. Refer to page 1117 for the number of installed switches and the min. stroke length.
*2 : The total length is the same as that of the next longer standard stroke length.
*3 : Refer to pages 1320 and 1321 for the min. stroke length with mounting brackets LB and LB2.

How to order switch

SW - T0H

Switch model No.
(Item Ⓓ on page 1118)

Cylinder weight table (the weight of the switches is when there are 2 cylinder switches.)

(Unit: g)

Stroke length (mm)	5		10		15		20		25		30		40		50		60		70		80		90		100	
Bore size (mm)	No switch	Switch	No switch	Switch	No switch	Switch	No switch	Switch	No switch	Switch	No switch	Switch	No switch	Switch	No switch	Switch	No switch	Switch	No switch	Switch	No switch	Switch	No switch	Switch	No switch	Switch
ø12	44	86	53	95	61	103	70	112	78	121	87	129	104	146	121	163	138	180	155	197	172	214	189	231	206	248
ø16	59	104	69	114	80	125	91	136	102	147	113	158	135	169	157	191	179	213	201	235	223	257	245	279	267	301
ø20	75	150	88	163	101	176	113	188	126	201	138	213	163	238	188	263	213	288	238	313	263	338	288	363	313	388
ø25	—	—	118	209	134	225	150	241	165	256	182	273	214	305	246	337	278	369	310	401	342	433	374	465	406	497
ø32	—	—	188	302	209	323	231	345	253	367	275	389	318	432	361	475	404	518	447	561	490	604	533	647	576	690
ø40	—	—	263	406	290	433	316	459	342	485	369	512	422	565	475	618	528	671	581	724	634	777	687	830	740	883
ø50	—	—	425	619	467	661	510	704	553	747	594	788	678	872	762	956	846	1040	930	1124	1014	1208	1098	1292	1182	1376
ø63	—	—	617	896	—	—	727	1006	—	—	838	1117	948	1227	1058	1337	1168	1447	1278	1557	1388	1667	1498	1777	1608	1887
ø80	—	—	1101	1514	—	—	1274	1687	—	—	1448	1861	1621	2034	1794	2207	1967	2380	2140	2553	2313	2726	2486	2899	2659	3072
ø100	—	—	1660	2227	—	—	1888	2455	—	—	2115	2682	2343	2910	2571	3138	2799	3366	3027	3594	3255	3822	3483	4050	3711	4278

Stroke length (mm)	110		120		130		140		150		160		170		180		190		200	
Bore size (mm)	No switch	Switch	No switch	Switch	No switch	Switch	No switch	Switch	No switch	Switch	No switch	Switch	No switch	Switch	No switch	Switch	No switch	Switch	No switch	Switch
ø20	338	413	363	438	388	463	413	488	438	513	463	538	488	563	513	588	538	613	563	638
ø25	438	529	470	561	502	593	534	625	566	657	598	689	630	721	662	753	694	785	726	817
ø32	619	733	662	776	705	819	748	862	791	905	833	947	876	990	919	1033	962	1076	1005	1119
ø40	793	936	846	989	899	1042	952	1095	1005	1148	1058	1201	1111	1254	1164	1307	1217	1360	1270	1413
ø50	1266	1460	1350	1544	1434	1628	1518	1712	1602	1796	1700	1894	1785	1979	1870	2064	1955	2149	2040	2234
ø63	1718	1997	1828	2107	1938	2217	2048	2327	2158	2437	2268	2547	2378	2657	2488	2767	2598	2877	2708	2987
ø80	2832	3245	3005	3418	3178	3591	3351	3764	3524	3937	3697	4110	3870	4283	4043	4456	4216	4629	4389	4802
ø100	3939	4506	4167	4734	4395	4962	4623	5190	4851	5418	5079	5646	5307	5874	5535	6102	5763	6830	5991	6558

Stroke length (mm)	210		220		230		240		250		260		270		280		290		300	
Bore size (mm)	No switch	Switch	No switch	Switch	No switch	Switch	No switch	Switch	No switch	Switch	No switch	Switch	No switch	Switch	No switch	Switch	No switch	Switch	No switch	Switch
ø25	769	849	801	881	833	913	865	945	897	977	929	1009	961	1041	993	1073	1025	1105	1057	1137
ø32	1048	1162	1091	1205	1134	1248	1177	1291	1220	1334	1263	1377	1306	1420	1349	1463	1392	1506	1435	1549
ø40	1323	1466	1376	1519	1429	1572	1482	1625	1535	1678	1588	1731	1641	1784	1694	1837	1747	1890	1800	1943
ø50	2125	2319	2210	2404	2295	2489	2380	2574	2465	2659	2550	2744	2635	2829	2720	2914	2805	2999	2890	3084
ø63	2817	3096	2927	3206	3037	3316	3147	3426	3257	3536	3367	3646	3477	3756	3587	3866	3697	3976	3807	4086
ø80	4561	4974	4734	5147	4907	5320	5080	5493	5253	5666	5426	5839	5599	6012	5772	6185	5945	6358	6118	6531
ø100	6220	6787	6448	7015	6676	7243	6904	7471	7132	7699	7360	7927	7588	8155	7816	8383	8044	8611	8272	8839

How to order mounting bracket

Bore size (mm) / Mounting bracket	ø12	ø16	ø20	ø25	ø32	ø40	ø50	ø63	ø80	ø100
Foot (LB)	SSD-LB-12	SSD-LB-16	SSD-LB-20	SSD-LB-25	SSD-LB-32	SSD-LB-40	SSD-LB-50	SSD-LB-63	SSD-LB-80	SSD-LB-100
Foot (LB2)	SSD-LB2-12	SSD-LB2-16	SSD-LB2-20	SSD-LB2-25	SSD-LB2-32	SSD-LB2-40	SSD-LB2-50	SSD-LB2-63	SSD-LB2-80	SSD-LB2-100
Flange (FA/FB)	SSD-FA-12	SSD-FA-16	SSD-FA-20	SSD-FA-25	SSD-FA-32	SSD-FA-40	SSD-FA-50	SSD-FA-63	SSD-FA-80	SSD-FA-100
Clevis bracket (CB)	SSD-CB-12	SSD-CB-16	SSD-CB-20	SSD-CB-25	SSD-CB-32	SSD-CB-40	SSD-CB-50	SSD-CB-63	SSD-CB-80	SSD-CB-100
Clevis bracket (CB2)	SSD-CB2-12	SSD-CB2-16	SSD-CB2-20	SSD-CB2-25	SSD-CB2-32	SSD-CB2-40	SSD-CB2-50	SSD-CB2-63	SSD-CB2-80	SSD-CB2-100

*1: The foot mounting bracket is provided as 2 pcs./set.

SCP*3
CMK2
CMA2
SCM
SCG
SCA2
SCS2
CKV2
CAV2/ COVP/N2
SSD2
SSG
SSD
CAT
MDC2
MVC
SMG
MSD/ MSDG
FC*
STK
SRL3
SRG3
SRM3
SRT3
MRL2
MRG2
SM-25
ShkAbs
FJ
FK
Spd Contr
Ending

Internal structure and parts list

● SSD-KL-12 to 25 (double acting/single rod high load/with switch)

ø20: Over 100 to 200 mm stroke length
ø25: Over 150 to 300 mm stroke length

● SSD-KL-32 (double acting/single rod high load/with switch)

ø32: Over 150 to 300 mm stroke length

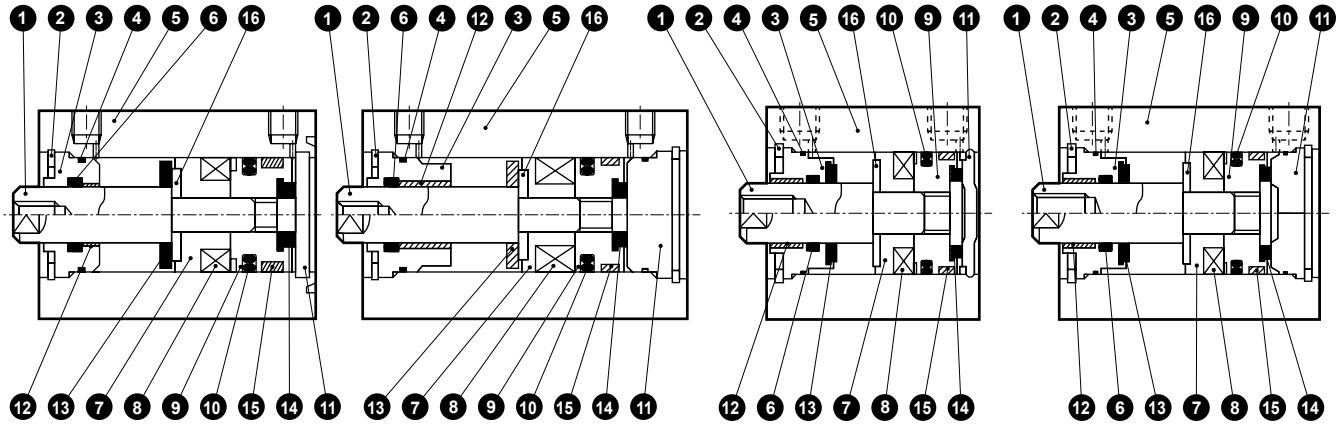

● SSD-K-12 to 25 (double acting/single rod high load)

ø20: Over 100 to 200 mm stroke length
ø25: Over 150 to 300 mm stroke length

● SSD-K-32 (double acting/single rod high load)

ø32: Over 150 to 300 mm stroke length

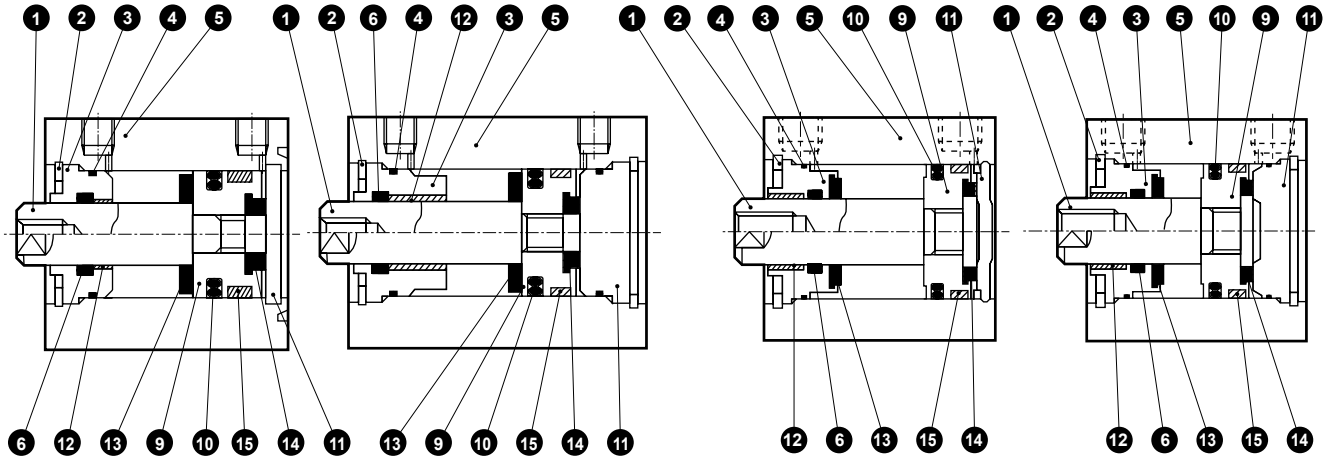

No.	Part name	Material	Remarks	No.	Part name	Material	Remarks
1	Piston rod	ø12 to ø25: Stainless steel ø32: Steel	ø16 to ø32 Industrial chrome plating	9	Piston	Aluminum alloy	Chromate
2	C type snap ring	Steel	Zinc phosphate	10	Piston packing	Nitrile rubber	
3	Rod metal	Special aluminum	Alumite (*3)	11	Cover	ø12 to ø25: Stainless steel ø32: Aluminum alloy	ø32: Alumite (*1)
4	Rod metal gasket	Nitrile rubber					
5	Body	Aluminum alloy	Hard alumite	12	Bush	Oiles drymet	ø20 to ø32 (*2)
6	Rod packing	Nitrile rubber		13	Cushion rubber R	Urethane rubber	
7	Spacer	ø12: Aluminum alloy ø16 to ø32: Special resin	ø12: Chromate	14	Cushion rubber H	Urethane rubber	
				15	Wear ring	Polyacetal resin	
8	Magnet	Plastic		16	Spacer washer	Stainless steel	ø20 to ø32

(*1) For cover for long stroke type (100 mm stroke and over for ø20, 150 mm stroke and over for ø25 and ø32), Material: Aluminum alloy, Remarks: Alumite treatment.
(*2) Material is steel for copper and PTFE free specifications.
(*3) Chromate-treated for ø32 only.

Repair parts list

Bore size (mm)	Kit No.	Repair parts No.
ø12	SSD-K-12K	❹ ❻ ❿ ⓭ ⓮ ⓯
ø16	SSD-K-16K	
ø20	SSD-K-20K	
ø25	SSD-K-25K	
ø32	SSD-K-32K	

Internal structure and parts list

● SSD-KL-40, 50 (double acting/single rod high load/with switch)
ø40, ø50: Over 150 to 300 mm stroke length

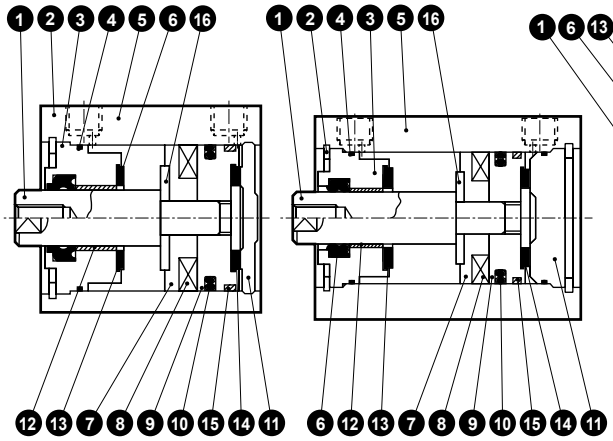

● SSD-KL-63 to 100 (double acting/single rod high load/with switch)
ø63 to ø100: Over 200 to 300 mm stroke length

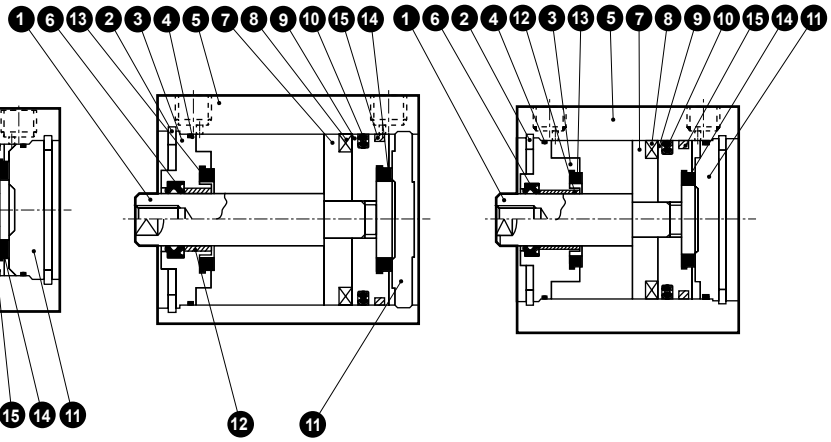

● SSD-K-40, 50 (double acting/single rod high load)
ø40, ø50: Over 150 to 300 mm stroke length

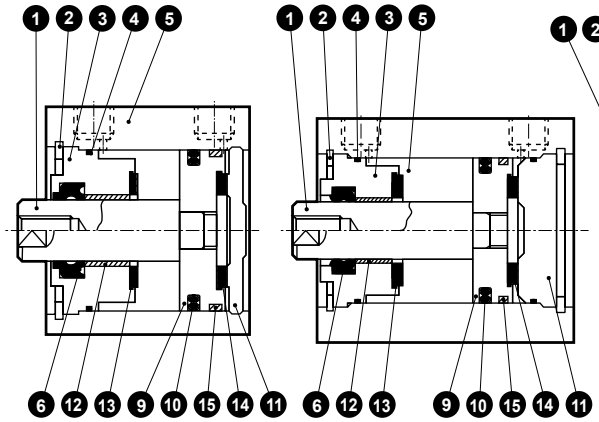

● SSD-K-63 to 100 (double acting/single rod high load)
ø63 to ø100: Over 200 to 300 mm stroke length

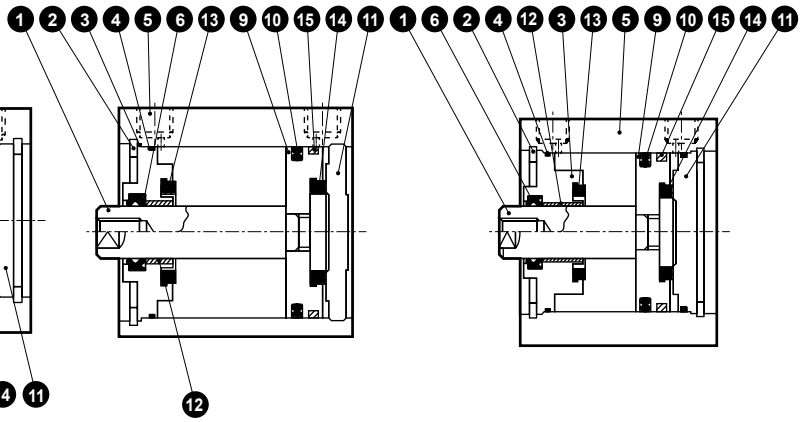

No.	Part name	Material	Remarks	No.	Part name	Material	Remarks
1	Piston rod	Steel	Industrial chrome plating	9	Piston	Aluminum alloy	Chromate
2	C type snap ring	Steel	Zinc phosphate	10	Piston packing	Nitrile rubber	
3	Rod metal	Aluminum alloy	Alumite (*2)	11	Cover	Aluminum alloy	Alumite
4	Rod metal gasket	Nitrile rubber		12	Bush	Oiles drymet	*1
5	Body	Aluminum alloy	Hard alumite	13	Cushion rubber R	Urethane rubber	
6	Rod packing	Nitrile rubber		14	Cushion rubber H	Urethane rubber	
7	Spacer	ø40, ø50: Special resin ø63 to ø100: Aluminum alloy	ø63 to ø100: Chromate	15	Wear ring	Polyacetal resin	
				16	Spacer washer	Stainless steel	ø40 to ø50
8	Magnet	Plastic					

(*1) Material is steel for copper and PTFE free specifications.
(*2) Chromate-treated for ø40 and ø50 only.

Repair parts list

Bore size (mm)	Kit No.	Repair parts No.
ø40	SSD-K-40K	❹ ❻ ❿ ⓭ ⓮ ⓯
ø50	SSD-K-50K	
ø63	SSD-K-63K	
ø80	SSD-K-80K	
ø100	SSD-K-100K	

SCP*3
CMK2
CMA2
SCM
SCG
SCA2
SCS2
CKV2
CAV2/COVP/N2
SSD2
SSG
SSD
CAT
MDC2
MVC
SMG
MSD/MSDG
FC*
STK
SRL3
SRG3
SRM3
SRT3
MRL2
MRG2
SM-25
ShkAbs
FJ
FK
Spd Contr
Ending

Dimensions CAD

● SSD-KL-12 to 25 (with switch)

ø12/ø16

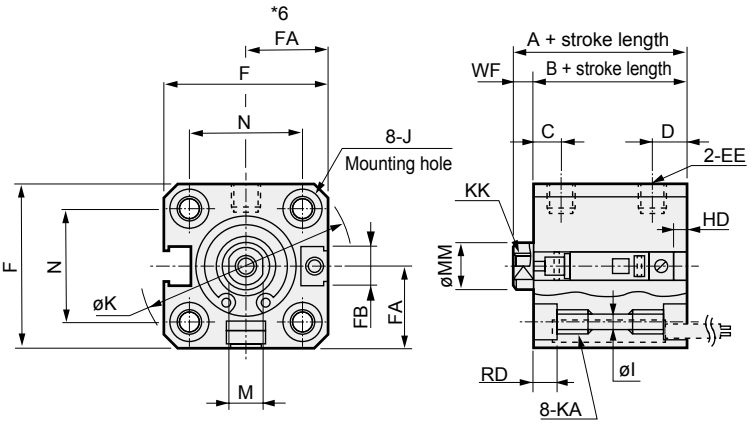

● Rod end male thread

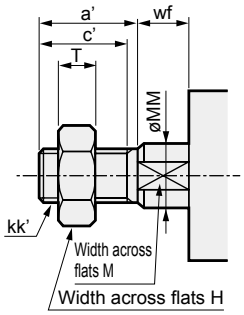

ø20/ø25

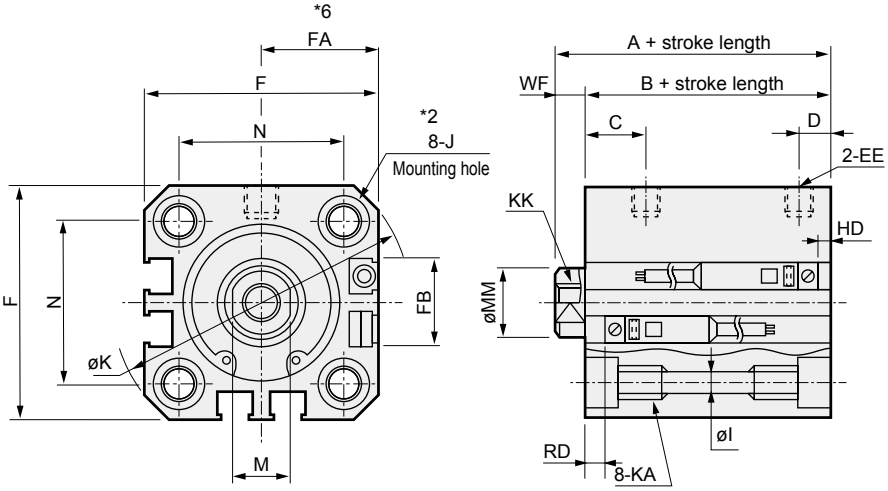

Code / Bore size (mm)	Common dimensions with switch																
	A *1	B *1	C	D *2	EE	F	FA *6	FB	I	J	K	KA	KK	M	MM	N	WF
ø12	30.5	27	5.5	5.5	M5	25	13(16.5)	4.5	3.5	6.5 spot face depth 3.5	32	M4 depth 7	M3 depth 6	5	6	15.5	3.5
ø16	30.5	27	5.5	5.5	M5	29	15(18.5)	4.5	3.5	6.5 spot face depth 3.5	38	M4 depth 7	M4 depth 8	6	8	20	3.5
ø20	39	34.5	8	5.5(8)	M5	36	18.5(22)	12.5	5.5	9 spot face depth 5.5	47	M6 depth 11	M5 depth 7	8	10	25.5	4.5
ø25	42.5	37.5	11	6(11)	M5	40	20.5(24)	13.5	5.5	9 spot face depth 5.5	51	M6 depth 11	M6 depth 12	10	12	28	5

Switch dimensions / Bore size (mm)	Reed T0H/T0V, T5H/T5V		Proximity T2H/T2V, T3H/T3V T2WH/T2WV, T3WH/T3WV	
	HD *2	RD *2	HD *2	RD *2
ø12	2.5	4.5	2.5	4.5
ø16	3	4	3	4
ø20	6(125)	8.5(13.5)	6(12.5)	8.5(13.5)
ø25	5.5(14)	12(17)	5.5(14)	12(17)

Table 1

Bore size	With switch	
	A *2	B *2
ø20	50.5	46
ø25	56	51

Table 2

Bore size	A + stroke length	B + stroke length
ø12	40.5	37
ø16	40.5	37

● *1: To calculate A + stroke length or B + stroke length when using custom stroke length, apply the next longer standard stroke length (instead of the custom stroke length) to the stroke length value. (Example) If the custom stroke length is 7 mm, apply the standard stroke length of 10 mm.

● *2 : When longer than 100 mm stroke for ø20 or longer than 150 mm stroke for ø25, A and B dimensions are indicated in Table 1 and there is no spot face J.
HD, RD and D dimensions are indicated in ( ).

● *3 : HD and RD dimensions for 5 mm stroke length differ from these dimensions according to the setting.

● *4 : When the stroke length is 5 mm for ø12 and ø16 with switch, (A + stroke) length and (B + stroke) length are as shown in Table 2.

● *5: Refer to page 1314 for HD, RD and protruding dimensions of the 2-color display, off-delay, AC magnetic field proof, T1* and T8* switches.

● *6 : Dimensions in ( ) of FA are for the radial lead wire.

● *7: Refer to pages 1320 to 1325 for dimensions including the accessories and pages 1108 to 1115 for dimensions of individual accessories.

● Dimensions of rod end male thread part

Code / Bore size (mm)	a'	c'	H	kk'	M	MM	T	wf
ø 12	10.5	9	8	M5	5	6	3.2	3.5
ø 16	12	10	10	M6	6	8	3.6	3.5
ø 20	14	12	13	M8	8	10	5	4.5
ø 25	17.5	15	17	M10×1.25	10	12	6	5

Dimensions

● SSD-K-12 to 25 (without switch)

ø12/ø16

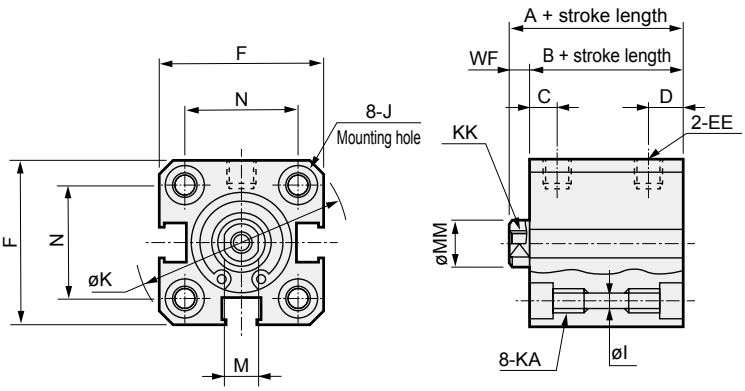

● Rod end male thread

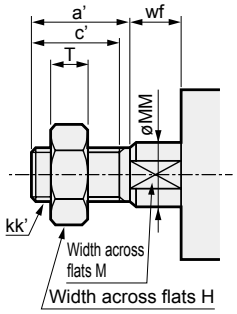

ø20/ø25

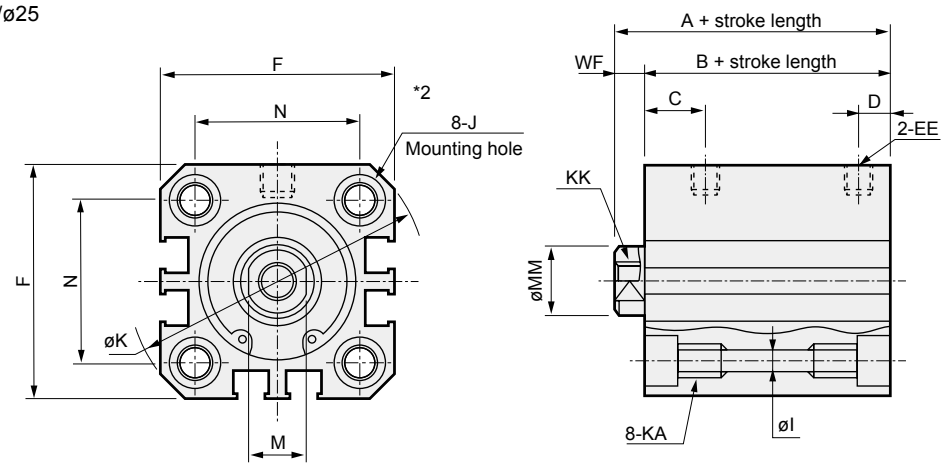

Code / Bore size (mm)	Dimensions without switch and common dimensions														
	A *1	B *1	C	D	EE	F	I	J	K	KA	KK	M	MM	N	WF
ø12	25.5	22	5.5	5.5	M5	25	3.5	6.5 spot face depth 3.5	32	M4 depth 7	M3 depth 6	5	6	15.5	3.5
ø16	25.5	22	5.5	5.5	M5	29	3.5	6.5 spot face depth 3.5	38	M4 depth 7	M4 depth 8	6	8	20	3.5
ø20	29	24.5	8	5.5	M5	36	5.5	9 spot face depth 5.5	47	M6 depth 11	M5 depth 7	8	10	25.5	4.5
ø25	32.5	27.5	11	6	M5	40	5.5	9 spot face depth 5.5	51	M6 depth 11	M6 depth 12	10	12	28	5

● *1: To calculate A + stroke length or B + stroke length when using custom stroke length, apply the next longer standard stroke length (instead of the custom stroke length) to the stroke length value.
(Example) If the custom stroke length is 7 mm, apply the standard stroke length of 10 mm.

● *2 : When longer than 100 mm stroke for ø20 or longer than 150 mm stroke for ø25, A and B dimensions are indicated in Table 1 and there is no spot face J.

● *3: Refer to pages 1320 to 1325 for dimensions including the accessories and pages 1108 to 1115 for dimensions of individual accessories.

Table 1

Bore size	A *2	B *2
ø20	40.5	36
ø25	46	41

● Dimensions of rod end male thread part

Code / Bore size (mm)	a'	c'	H	kk'	M	MM	T	wf
ø 12	10.5	9	8	M5	5	6	3.2	3.5
ø 16	12	10	10	M6	6	8	3.6	3.5
ø 20	14	12	13	M8	8	10	5	4.5
ø 25	17.5	15	17	M10×1.25	10	12	6	5

Dimensions

● SSD-KL-32 to 100 (with switch)

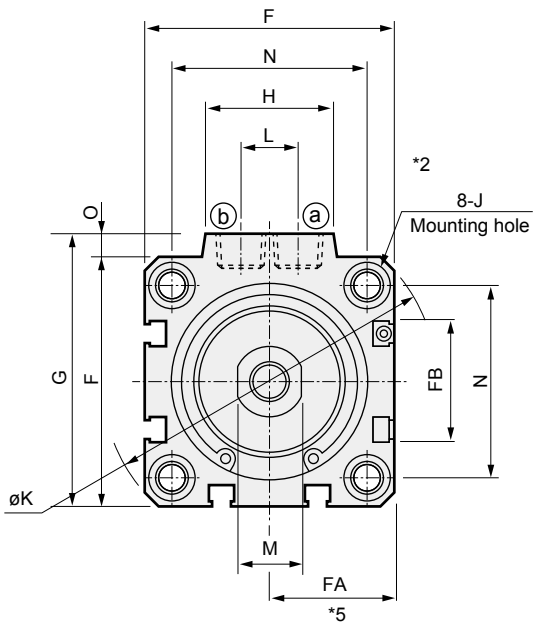

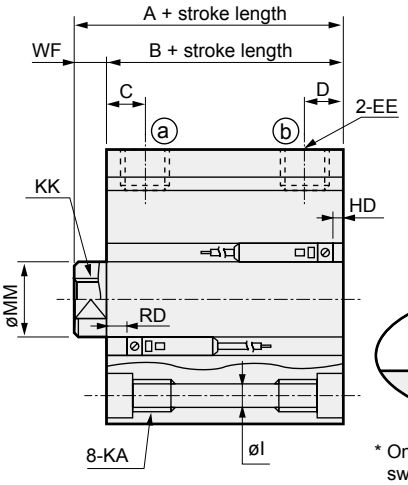

● Rod end male thread

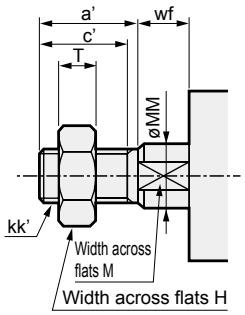

[Bore size ø100]

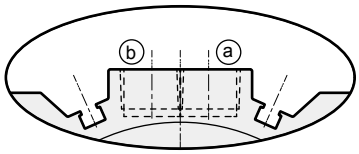

* Only for ø100, the port surface has switch grooves.

Code / Bore size (mm)	Common dimensions with switch																				
	A *1	B *1	C	D *2	EE	F	FA *5	FB	G	H	I	J	K	KA	KK	L	M	MM	N	O	WF
ø32	50	43	8	8(8)	Rc 1/8	45	23(26.5)	20.5	49.5	24	5.5	9 spot face depth 5.5	60	M6 depth 11	M8 depth 13	10	14	16	34	4.5	7
ø40	56.5	49.5	12	8.5(12)	Rc 1/8	52	26.5(30)	27.5	57	24	5.5	9 spot face depth 5.5	69	M6 depth 11	M8 depth 13	10	14	16	40	5	7
ø50	58.5	50.5	10.5	10.5(10.5)	Rc 1/4	64	32.5(36)	28.5	71	33	6.9	11 spot face depth 6.5	86	M8 depth 13	M10 depth 15	15	17	20	50	7	8
ø63	64	56	13	11(13)	Rc 1/4	77	39(42.5)	28.5	84	33	8.7	14 spot face depth 9	103	M10 depth 25	M10 depth 15	15	17	20	60	7	8
ø80	73.5	63.5	16	13(16)	Rc 3/8	98	49.5(53)	28.5	104	38	10.5	17.5 spot face depth 11	132	M12 depth 28	M16 depth 21	15	22	25	77	6	10
ø100	85	73	23	15(23)	Rc 3/8	117	59(62.5)	28.5	123.5	38	10.5	17.5 spot face depth 11	156	M12 depth 28	M20 depth 27	15	27	30	94	6.5	12

Switch dimensions / Bore size (mm)	Reed T0H/T0V, T5H/T5V		Proximity T2H/T2V, T3H/T3V T2WH/T2WV, T3WH/T3WV	
	HD *2	RD *2	HD *2	RD *2
ø32	8.5(16)	14(14)	8.5(16)	14(14)
ø40	9.5(19)	19.5(19.5)	9.5(19)	19.5(19.5)
ø50	10(19)	20(25)	10(19)	20(25)
ø63	17.5(23)	18(23)	17.5(23)	18(23)
ø80	22(28)	20.5(25.5)	22.5(28)	20.5(25.5)
ø100	28(33.5)	24.5(29.5)	28(33.5)	24.5((29.5)

Table 2

Bore size	With switch	
	A *2	B *2
ø32	57.5	50.5
ø40	66	59
ø50	72	64
ø63	74	66
ø80	83.5	73.5
ø100	95	83

● *1 : To calculate A + stroke length or B + stroke length when using custom stroke length, apply the next longer standard stroke length (instead of the custom stroke length) to the stroke length value. (Example) If the custom stroke length is 7 mm, apply the standard stroke length of 10 mm.

● *2 : When longer than 150 mm stroke for ø32 to ø50 or longer than 200 mm stroke for ø63 to ø100, A and B dimensions are indicated in Table 2 and there is no spot face J. HD, RD and D dimensions are indicated in ( ).

● *3 : HD and RD dimensions for 5 mm stroke length differ from these dimensions according to the setting.

● *4 : Refer to page 1315 for HD, RD and protruding dimensions of the 2-color display, off-delay, AC magnetic field proof, T1* and T8* switches.

● *5 : Dimensions in ( ) of FA are for the radial lead wire.

● *6 : Refer to pages 1320 to 1325 for dimensions including the accessories and pages 1108 to 1115 for dimensions of individual accessories.

● Dimensions of rod end male thread part

Code / Bore size (mm)	a'	c'	H	kk'	M	MM	T	wf
ø 32	23.5	20.5	22	M14×1.5	14	16	8	5
ø 40	23.5	20.5	22	M14×1.5	14	16	8	5
ø 50	28.5	26	27	M18×1.5	17	20	11	5
ø 63	28.5	26	27	M18×1.5	17	20	11	5
ø 80	35.5	32.5	32	M22×1.5	22	25	13	8
ø100	35.5	32.5	41	M26×1.5	27	30	16	8

Dimensions

● SSD-K-32 to 100 (without switch)

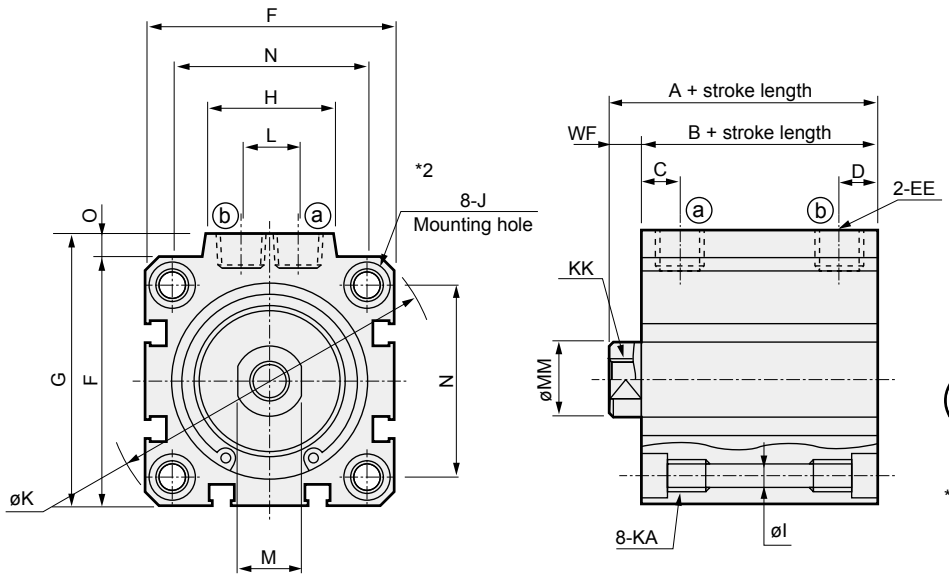

● Rod end male thread

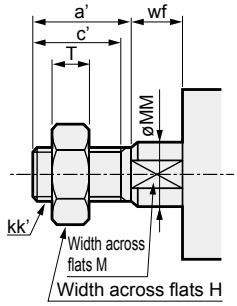

[Bore size ø100]

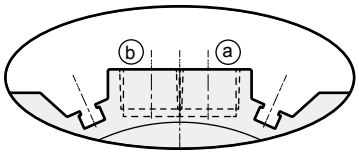

* Only for ø100, the port surface has switch grooves.

Code / Bore size (mm)	Dimensions without switch and common dimensions																			
	A *1	B *1	C	D *2	EE	F	G	H	I	J	K	KA	KK	L	M	MM	N	O	WF
ø32	40	33	8	8(8)	Rc 1/8	45	49.5	24	5.5	9 spot face depth 5.5	60	M6 depth 11	M8 depth 13	10	14	16	34	4.5	7
ø40	46.5	39.5	12	8.5(12)	Rc 1/8	52	57	24	5.5	9 spot face depth 5.5	69	M6 depth 11	M8 depth 13	10	14	16	40	5	7
ø50	48.5	40.5	10.5	10.5(10.5)	Rc 1/4	64	71	33	6.9	11 spot face depth 6.5	86	M8 depth 13	M10 depth 15	15	17	20	50	7	8
ø63	54	46	13	11(13)	Rc 1/4	77	84	33	8.7	14 spot face depth 9	103	M10 depth 25	M10 depth 15	15	17	20	60	7	8
ø80	63.5	53.5	16	13(16)	Rc 3/8	98	104	38	10.5	17.5 spot face depth 11	132	M12 depth 28	M16 depth 21	15	22	25	77	6	10
ø100	75	63	23	15(23)	Rc 3/8	117	123.5	38	10.5	17.5 spot face depth 11	156	M12 depth 28	M20 depth 27	15	27	30	94	6.5	12

Table 2

Bore size	A *2	B *2
ø32	47.5	40.5
ø40	56	49
ø50	62	54
ø63	64	56
ø80	73.5	63.5
ø100	85	73

● *1: To calculate A + stroke length or B + stroke length when using custom stroke length, apply the next longer standard stroke length (instead of the custom stroke length) to the stroke length value. (Example) If the custom stroke length is 7 mm, apply the standard stroke length of 10 mm.

● *2 : When longer than 150 mm stroke for ø32 to ø50 or longer than 200 mm stroke for ø63 to ø100, A and B dimensions are indicated in Table 2 and there is no spot face J. D dimensions are indicated in ( ).

● *3: Refer to pages 1320 to 1325 for dimensions including the accessories and pages 1108 to 1115 for dimensions of individual accessories.

● Dimensions of rod end male thread part

Code / Bore size (mm)	a'	c'	H	kk'	M	MM	T	wf
ø 32	23.5	20.5	22	M14×1.5	14	16	8	5
ø 40	23.5	20.5	22	M14×1.5	14	16	8	5
ø 50	28.5	26	27	M18×1.5	17	20	11	5
ø 63	28.5	26	27	M18×1.5	17	20	11	5
ø 80	35.5	32.5	32	M22×1.5	22	25	13	8
ø100	35.5	32.5	41	M26×1.5	27	30	16	8

Note: Refer to pages 1320 to 1325 for dimensions including the accessories and pages 1108 to 1115 for dimensions of individual accessories.

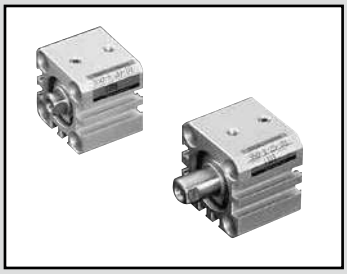

Compact cylinder
Single acting/push

SSD-X Series

Single acting/pull

SSD-Y Series

● Bore size: ø12/ø16/ø20/ø25/ø32/ø40/ø50

JIS symbol SSD-X

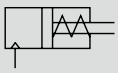

SSD-Y

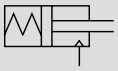

Specifications

Item	SSD-X SSD-XL (with switch) / SSD-Y SSD-YL (with switch)						
Bore size mm	ø12	ø16	ø20	ø25	ø32	ø40	ø50
Actuation	SSD-X, XL: single acting/push, SSD-Y, YL: single acting/pull						
Working fluid	Compressed air						
Max. working pressure MPa	1.0 (≈150 psi, 10 bar)						
Min. working pressure MPa	0.2 (≈29 psi, 2 bar)		0.17 (≈25 psi, 1.7 bar)		0.12 (≈17 psi, 1.2 bar)		
Proof pressure MPa	1.6 (≈230 psi, 16 bar)						
Ambient temperature °C	-10 (14°F) to 60 (140°F) (no freezing)						
Port size	M5				Rc 1/8		Rc 1/4
Stroke tolerance mm	+1.0 0						
Working piston speed mm/s	50 to 500						
Cushion	None						
Lubrication	Not required (use turbine oil ISO VG32 if necessary for lubrication)						
Allowable absorbed energy J	0.004	0.01	0.016	0.021	0.025	0.092	0.1

Note: Do not leave the single acting cylinder pressurized for a long time. If it is left pressurized for long periods, the piston rod may not return due to spring load when the pressure is released. Use the double acting if the cylinder needs to be left pressurized for long periods.

Stroke length

Bore size (mm)	Standard stroke length (mm)	Max. stroke length (mm)	Min. stroke length (mm)
ø12	5, 10	10	5
ø16			
ø20			
ø25			
ø32			
ø40	10, 20	20	10
ø50			

*1 : When using the type with switch, refer to the table below.
*2 : Refer to pages 1320 and 1321 for the min. stroke length with mounting brackets LB and LB2.

Number of installed switches and min. stroke length (mm)

Switch quantity	1	2
Switch model No. / Bore size (mm)	T*	T*
ø12	5	5
ø16	5	5
ø20	5	5
ø25	5	5
ø32	5	5
ø40	10	10
ø50	10	10

Note: Less than 10 mm with the 2-color display, off-delay, AC magnetic field proof, T1* or T8* switch is not available.

Switch specifications

● 1-color/2-color display/for AC magnetic field proof

Item	Proximity 2-wire				Proximity 3-wire				Reed 2-wire							Proximity 2-wire
	T1H/ T1V	T2H/T2V/ T2JH/T2JV	T2YH/ T2YV	T2WH/ T2WV	T3H/ T3V	T3PH/ T3PV	T3YH/ T3YV	T3WH/ T3WV	T0H/T0V		T5H/T5V		T8H/T8V			T2YD (*4) T2YDT
Applications	For programmable controller, relay, compact solenoid valve	Dedicated for programmable controller			For programmable controller, relay				For programmable controller, relay		For programmable controller, relay (no lamp), serial		For programmable controller, relay			Dedicated for programmable controller
Output method	-				NPN output	PNP output	NPN output	NPN output	-							
Pwr. supp. V.	-				10 to 28 VDC				-							
Load voltage	85 to 265 VAC	10 to 30 VDC		24 VDC ±10%	30 VDC or less				12/24 VDC	100/110 VAC	5/12/24 VDC	100/110 VAC	12/24 VDC	110 VAC	220 VAC	24 VDC ±10%
Load current	5 to 100 mA	5 to 20 mA (*3)			100 mA or less		50 mA or less		5 to 50 mA	7 to 20 mA	50 mA or less	20 mA or less	5 to 50 mA	7 to 20 mA	7 to 10 mA	5 to 20 mA
Indicator lamp	LED (Lit when ON)	LED (Lit when ON)	Red/green LED (Lit when ON)	Red/green LED (Lit when ON)	LED (Lit when ON)	Yellow LED (Lit when ON)	Red/green LED (Lit when ON)	Red/green LED (Lit when ON)	LED (Lit when ON)		Without indicator lamp		LED (Lit when ON)			Red/green LED (Lit when ON)
Leakage current	≤ 1 mA at 100 VAC, ≤ 2 mA at 200 VAC	1 mA or less			10 μA or less				0 mA							1 mA or less
Weight g	1 m:33 3 m:87 5 m:142	1 m:18 3 m:49 5 m:80	1 m:33 3 m:87 5 m:142	1 m:18 3 m:49 5 m:80	1 m:18 3 m:49 5 m:80		1 m:33 3 m:87 5 m:142	1 m:18 3 m:49 5 m:80	1 m:18 3 m:49 5 m:80				1 m:33 3 m:87 5 m:142			1 m:61 3 m:166 5 m:272

*1 : Refer to Ending Page 1 for detailed switch specifications and dimensions.
*2 : Switches other than the above models, such as switches with connectors, are also available. Refer to Ending Page 1.
*3 : The max. load current is 20 mA at 25°C. The current is lower than 20 mA if the operating ambient temperature around the switch is higher than 25°C. (5 to 10 mA at 60°C)
*4 : Switch for AC magnetic field (T2YD/T2YDT) cannot be used in DC magnetic field.

Cylinder weight table (the weight of the switches is when there are 2 cylinder switches.)

(Unit: g)

Stroke length (mm)	5		10		20	
Bore size (mm)	Without switch	With switch	Without switch	With switch	Without switch	With switch
ø12	40	80	49	89	-	-
ø16	52	92	64	104	-	-
ø20	74	114	89	129	-	-
ø25	107	147	127	167	-	-
ø32	155	195	183	223	-	-
ø40	-	-	285	325	358	398
ø50	-	-	459	499	572	612

SSD-X/SSD-Y spring load

(Unit: N)

Bore size (mm)	Stroke length (mm)	SSD-X		SSD-Y	
		When stroke length = 0	At full stroke	When stroke length = 0	At full stroke
ø12	5	8.7	13.7	2.9	11
	10	2.9	13.7	2.9	11.3
ø16	5	10.2	15.1	3.5	13.2
	10	5.4	15.1	3.5	13.2
ø20	5	16.8	24	11.8	30.4
	10	9.7	24	12.7	30.3
ø25	5	17.1	23.5	10.8	26.5
	10	10.8	23.5	10.8	26.5
ø32	5	24.1	28.5	17	27
	10	19.6	28.5	17.9	27.4
ø40	10	28.9	38.2	19.3	33
	20	19.6	38.2	19.9	40.2
ø50	10	33.3	47.9	24.5	84.3
	20	18.8	47.9	23.1	82.3

Theoretical thrust table

(Unit: N)

Bore size (mm)	Operating direction	Working pressure MPa									
		0.15	0.2	0.3	0.4	0.5	0.6	0.7	0.8	0.9	1.0
ø12	Push	-	22.6	33.9	45.2	56.5	67.9	79.2	90.5	1.02×10^2	1.13×10^2
	Pull	-	17.0	25.4	33.9	42.4	50.9	59.4	67.9	76.3	84.8
ø16	Push	-	40.2	60.3	80.4	1.01×10^2	1.21×10^2	1.41×10^2	1.61×10^2	1.81×10^2	2.01×10^2
	Pull	-	30.2	45.2	60.3	75.4	90.5	1.06×10^2	1.21×10^2	1.36×10^2	1.51×10^2
ø20	Push	-	62.8	94.2	1.26×10^2	1.57×10^2	1.88×10^2	2.20×10^2	2.51×10^2	2.83×10^2	3.14×10^2
	Pull	-	47.1	70.7	94.2	1.18×10^2	1.41×10^2	1.65×10^2	1.88×10^2	2.12×10^2	2.36×10^2
ø25	Push	-	98.2	1.47×10^2	1.96×10^2	2.45×10^2	2.95×10^2	3.44×10^2	3.93×10^2	4.42×10^2	4.91×10^2
	Pull	-	75.6	1.13×10^2	1.51×10^2	1.89×10^2	2.27×10^2	2.64×10^2	3.02×10^2	3.40×10^2	3.78×10^2
ø32	Push	1.21×10^2	1.61×10^2	2.41×10^2	3.22×10^2	4.02×10^2	4.83×10^2	5.63×10^2	6.43×10^2	7.24×10^2	8.04×10^2
	Pull	90.5	1.21×10^2	1.81×10^2	2.41×10^2	3.02×10^2	3.62×10^2	4.22×10^2	4.83×10^2	5.43×10^2	6.03×10^2
ø40	Push	1.88×10^2	2.51×10^2	3.77×10^2	5.03×10^2	6.28×10^2	7.54×10^2	8.80×10^2	1.01×10^3	1.13×10^3	1.26×10^3
	Pull	1.58×10^2	2.11×10^2	3.17×10^2	4.22×10^2	5.28×10^2	6.33×10^2	7.39×10^2	8.44×10^2	9.50×10^2	1.06×10^3
ø50	Push	2.95×10^2	3.93×10^2	5.89×10^2	7.85×10^2	9.82×10^2	1.18×10^3	1.37×10^3	1.57×10^3	1.77×10^3	1.96×10^3
	Pull	2.47×10^2	3.30×10^2	4.95×10^2	6.60×10^2	8.25×10^2	9.90×10^2	1.15×10^3	1.32×10^3	1.48×10^3	1.65×10^3

How to order

Without switch (without magnet for switch)

SSD-X — 12 ( ) - 5 — N - LB - I

With switch (built-in magnet for switch)

SSD-XL - 12 ( ) - 5 - T0H - R - N - LB - I

2-color display/off-delay/with T1* switch (ø12/ø16 only)
(built-in magnet for switch)

SSD-XL1 - 12 ( ) - 10 - T2YH - R - N - LB - I

Ⓐ Model No.
Ⓑ Bore size
Ⓒ Port thread
Ⓓ Stroke length
Ⓔ Switch model No. *1 *2 *11
Ⓕ Switch quantity
Ⓖ Option *3 *4
Ⓗ Mounting bracket *5 *6
Ⓘ Accessory *7

Precautions for model No. selection

*1 : Switches other than Ⓔ Switch model No. are also available. (Made to order) Refer to Ending Page 1 for details.
2 : An AC magnetic field proof switch cannot be installed on ø12 and ø16. In addition, T8 switch cannot be installed on ø12 to ø32.
*3 : Piston rod of ø12 to ø25 is stainless steel as standard. C type snap ring is stainless steel instead of steel. The rod end male thread nut is stainless steel.
*4 : Copper and PTFE free as standard.
*5 : The mounting bracket is included at shipment.
*6 : The projection dimension of piston rod WF when LB2 or FA is selected is different from that of the standard. Refer to the dimensions on pages 1109 and 1110. The number of the specified protruding dimension will be added at the end of the model No. printed on the metal plate on the body.
*7 : "I" and "Y" cannot be selected together.
*8 : Refer to Ending Page 85 for custom specifications of rod end form.
*9 : Refer to pages 1086 and 1087 for combinations of variations/options.
10 : Less than 10 mm with the 2-color display, off-delay, AC magnetic field proof, T1 or T8* switch is not available.
*11 : Switches are shipped with the product. Contact CKD if assembling before shipment is necessary.

[Example of model No.]

SSD-XL-12-5-T0H-R-N

Model: Compact cylinder

Ⓐ Model No.	: Single acting push
Ⓑ Bore size	: ø12 mm
Ⓒ Port thread	: Rc thread
Ⓓ Stroke length	: 5 mm
Ⓔ Switch model No.	: Reed switch T0H · Lead wire length 1 m
Ⓕ Switch quantity	: 1 on rod side
Ⓖ Option	: Rod end male thread

Code	Description
Ⓐ Model No.	
SSD-X	Single acting/push
SSD-XL	Single acting/push/with switch
SSD-XL1	ø12, ø16 2-color display, with preventive maintenance switch
SSD-Y	Single acting/pull
SSD-YL	Single acting/pull/with switch
SSD-YL1	ø12, ø16 2-color display, off-delay, with T1* switch
Ⓑ Bore size (mm)	
12	ø12
16	ø16
20	ø20
25	ø25
32	ø32
40	ø40
50	ø50
Ⓒ Port thread	
Blank	Rc thread
NN	NPT thread (ø32 and over) (made-to-order product)
GN	G thread (ø32 and over) (made-to-order product)

Ⓓ Stroke length (mm)

	Bore size (mm)	ø12	ø16	ø20	ø25	ø32	ø40	ø50
5	5	●	●	●	●	●		
10	10	●	●	●	●	●	●	●
20	20						●	●

Ⓔ Switch model No.

Axial lead wire	Radial lead wire	Contact	Voltage AC	Voltage DC	Display	Lead wire
T0H*	**T0V***	Reed	●	●	1-color display	2-wire
T5H*	**T5V***	Reed	●	●	Without indicator lamp	2-wire
T8H*	**T8V***	Reed	●	●	1-color display	2-wire
T1H*	**T1V***	Proximity	●		1-color display	2-wire
T2H*	**T2V***	Proximity		●	1-color display	2-wire
T3H*	**T3V***	Proximity		●	1-color display	3-wire
T3PH*	**T3PV***	Proximity		●	1-color display	3-wire
T2WH*	**T2WV***	Proximity		●	2-color display	2-wire
T2YH*	**T2YV***	Proximity		●	2-color display	2-wire
T3WH*	**T3WV***	Proximity		●	2-color display	3-wire
T3YH*	**T3YV***	Proximity		●	2-color display	3-wire
T2JH*	**T2JV***	Proximity		●	1-color display off-delay	2-wire
T2YD*	**-**	Proximity		●	2-color display AC magnetic field	2-wire
T2YDT*	**-**	Proximity		●	2-color display AC magnetic field	2-wire
T2HR3	**T2VR3**	Proximity		●	1-color display (bend resist lead wire specs)	2-wire

*** Lead wire length**	
Blank	1 m (standard)
3	3 m (option)
5	5 m (option)
Ⓕ Switch quantity	
R	1 on rod side
H	1 on head side
D	2
Ⓖ Option	
Blank	Rod end female thread
N	Rod end male thread
M	Piston rod material (stainless steel)
Ⓗ Mounting bracket	
LB	Axial foot
LB2	Axial foot (compact)
CB	Clevis bracket (pin and snap ring included)
CB2	Clevis bracket (compact) (pin and snap ring included)
FA	Rod side flange
FB	Head side flange
Ⓘ Accessory (available when rod end male thread "N" is selected)	
I	Rod eye
I2	Rod eye (compact)
Y	Rod clevis (pin and snap ring included)
Y2	Rod clevis (compact) (pin and snap ring included)

How to order switch

SW - T0H

Switch model No.
(Item Ⓔ on page 1128)

How to order mounting bracket

Bore size (mm) / Mounting bracket	ø12	ø16	ø20	ø25	ø32	ø40	ø50
Foot (LB)	SSD-LB-12	SSD-LB-16	SSD-LB-20	SSD-LB-25	SSD-LB-32	SSD-LB-40	SSD-LB-50
Foot (LB2)	SSD-LB2-12	SSD-LB2-16	SSD-LB2-20	SSD-LB2-25	SSD-LB2-32	SSD-LB2-40	SSD-LB2-50
Flange (FA/FB)	SSD-FA-12	SSD-FA-16	SSD-FA-20	SSD-FA-25	SSD-FA-32	SSD-FA-40	SSD-FA-50
Clevis bracket (CB)	SSD-CB-12	SSD-CB-16	SSD-CB-20	SSD-CB-25	SSD-CB-32	SSD-CB-40	SSD-CB-50
Clevis bracket (CB2)	SSD-CB2-12	SSD-CB2-16	SSD-CB2-20	SSD-CB2-25	SSD-CB2-32	SSD-CB2-40	SSD-CB2-50

*1: The foot mounting bracket is provided as 2 pcs./set.

SCP*3
CMK2
CMA2
SCM
SCG
SCA2
SCS2
CKV2
CAV2/COVP/N2
SSD2
SSG
SSD
CAT
MDC2
MVC
SMG
MSD/MSDG
FC*
STK
SRL3
SRG3
SRM3
SRT3
MRL2
MRG2
SM-25
ShkAbs
FJ
FK
Spd Contr
Ending

Internal structure and parts list

● SSD-XL (single acting/push/with switch)

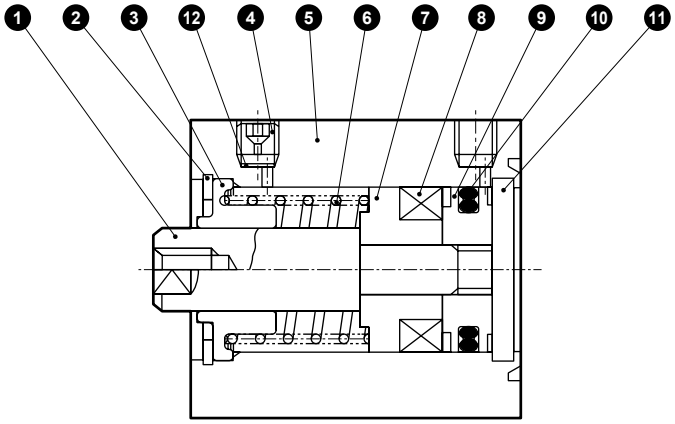

● SSD-X (single acting/push)

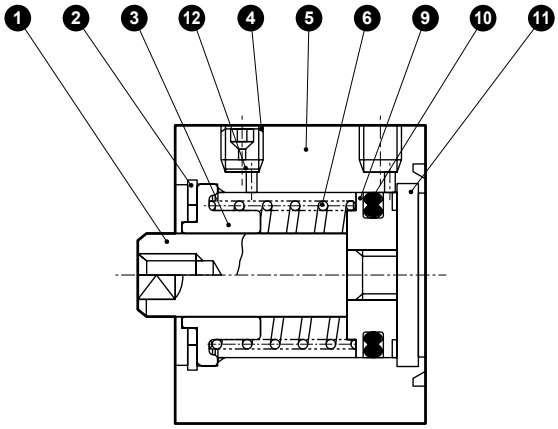

No.	Part name	Material	Remarks	No.	Part name	Material	Remarks
1	Piston rod	ø12 to ø25: Stainless steel ø32 to ø50: Steel	ø16 to ø50: Industrial chrome plating	7	Spacer	Aluminum alloy	Chromate
				8	Magnet	Plastic	
2	C type snap ring	Steel	Zinc phosphate	9	Piston	Aluminum alloy	Chromate
3	Rod metal	Special aluminum	Alumite	10	Piston packing	Nitrile rubber	
4	Plug	Stainless steel		11	Cover	ø12 to ø25: Stainless steel ø32 to ø50: Aluminum alloy	ø32 to ø50: Alumite
5	Body	Aluminum alloy	Hard alumite				
6	Spring	Piano wire	Electrodeposition	12	Stainless steel wire mesh	Stainless steel	

Repair parts list

Bore size (mm)	Kit No.	Repair parts No.
ø12	SSD-X-12K	❿
ø16	SSD-X-16K	
ø20	SSD-X-20K	
ø25	SSD-X-25K	
ø32	SSD-X-32K	
ø40	SSD-X-40K	
ø50	SSD-X-50K	

Internal structure and parts list

● SSD-YL (single acting/pull/with switch)

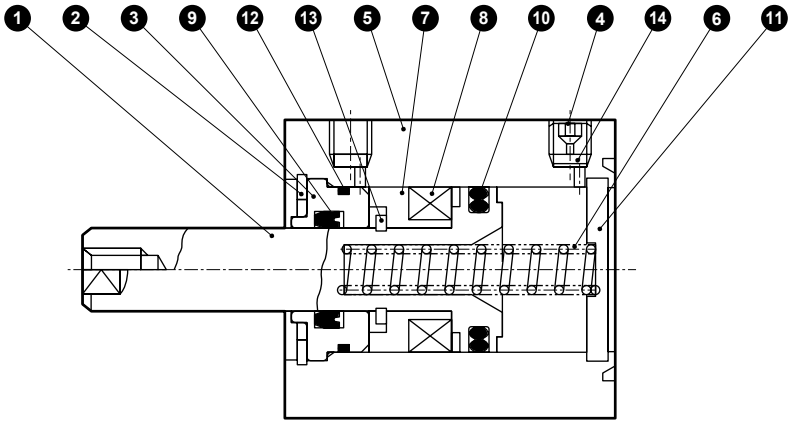

● SSD-Y (single acting/pull)

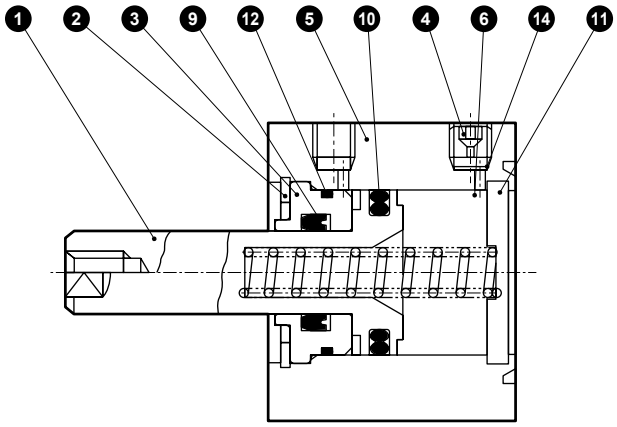

No.	Part name	Material	Remarks	No.	Part name	Material	Remarks
1	Piston	Stainless steel		8	Magnet	Plastic	
				9	Rod packing	Nitrile rubber	
2	C type snap ring	Steel	Zinc phosphate	10	Piston packing	Nitrile rubber	
3	Rod metal	Special aluminum alloy	Alumite	11	Cover	ø12 to ø25: Stainless steel ø32 to ø50: Aluminum alloy	ø32 to ø50: Alumite
4	Plug	Stainless steel					
5	Body	Aluminum alloy	Hard alumite	12	Metal gasket	Nitrile rubber	
6	Spring	Piano wire	Electrodeposition	13	Round S type snap ring	Steel	Zinc phosphate
7	Spacer	Aluminum alloy	Chromate	14	Stainless steel wire mesh	Stainless steel	

Repair parts list

Bore size (mm)	Kit No.	Repair parts No.
ø12	SSD-Y-12K	❾ ❿ ⓬
ø16	SSD-Y-16K	
ø20	SSD-Y-20K	
ø25	SSD-Y-25K	
ø32	SSD-Y-32K	
ø40	SSD-Y-40K	
ø50	SSD-Y-50K	

Dimensions CAD

● SSD-XL-12 to 25 (with switch)

ø12/ø16

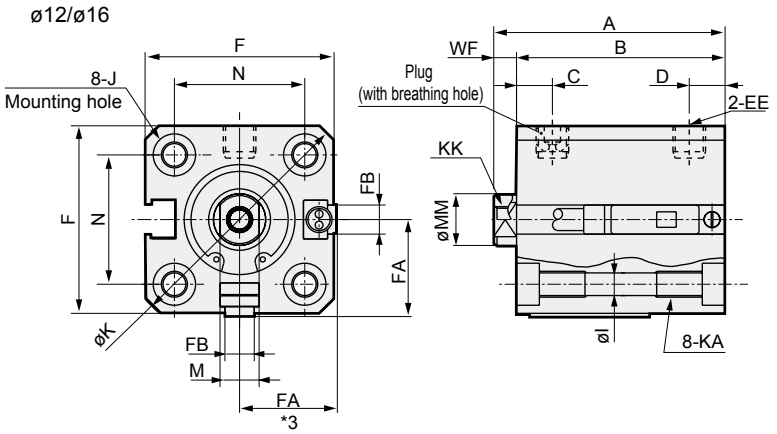

● Rod end male thread

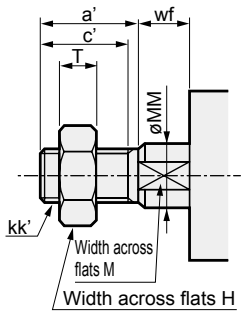

ø20/ø25

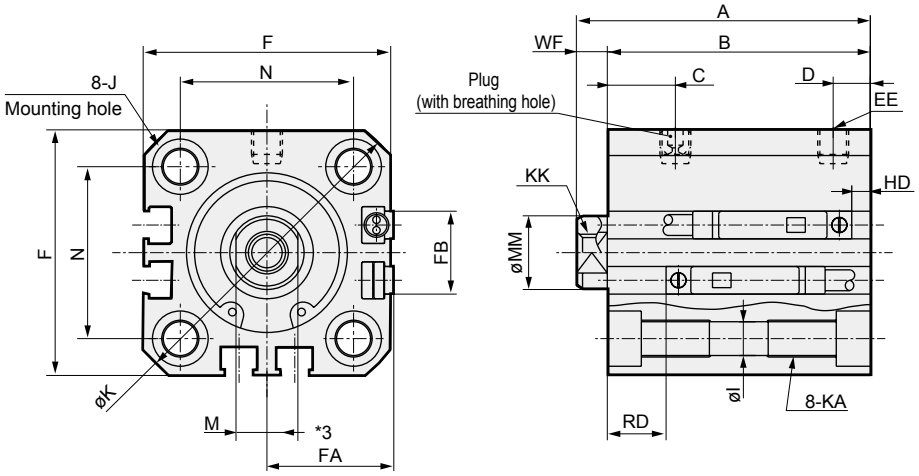

Code / Bore size (mm)		Common dimensions with switch																
		A	B	C	D	EE	F	FA *3	FB	I	J	K	KA	KK	M	MM	N	WF
ø12	Stroke mm 5	35.5	32	5.5	5.5	M5	25	13(16.5)	4.5	3.5	6.5 spot face depth 3.5	32	M4 depth 7	M3 depth 6	5	6	15.5	3.5
	Stroke mm 10																	
ø16	Stroke mm 5	35.5	32	5.5	5.5	M5	29	15(18.5)	4.5	3.5	6.5 spot face depth 3.5	38	M4 depth 7	M4 depth 8	6	8	20	3.5
	Stroke mm 10																	
ø20	Stroke mm 5	39	34.5	8	5.5	M5	36	18.5(22)	12.5	5.5	9 spot face depth 5.5	47	M6 depth 11	M5 depth 7	8	10	25.5	4.5
	Stroke mm 10	44	39.5															
ø25	Stroke mm 5	42.5	37.5	11	6	M5	40	20.5(24)	13.5	5.5	9 spot face depth 5.5	51	M6 depth 11	M6 depth 12	10	12	28	5
	Stroke mm 10	47.5	42.5															

Dimensions of rod end male thread

Code / Bore size (mm)	a'	c'	H	kk'	M	MM	T	wf
ø 12	10.5	9	8	M5	5	6	3.2	3.5
ø 16	12	10	10	M6	6	8	3.6	3.5
ø 20	14	12	13	M8	8	10	5	4.5
ø 25	17.5	15	17	M10×1.25	10	12	6	5

Switch dimensions / Bore size (mm)	Reed T0H/T0V, T5H/T5V		Proximity T2H/T2V, T3H/T3V T2WH/T2WV, T3WH/T3WV	
	HD *1	RD *1	HD *1	RD *1
ø12	0	2.5	0	2.5
ø16	0	2	0	2
ø20	3	6.5	3	6.5
ø25	3	9.5	3	9.5

*1 : HD and RD dimensions for 5 mm stroke length differ from these dimensions according to the setting.
2 : Refer to page 1312 for HD, RD and protruding dimensions of the 2-color display, off-delay, AC magnetic field proof, T1 and T8* switches.
*3 : Dimensions in ( ) of FA are for the radial lead wire.
*4 : For dimensions of individual accessories, refer to pages 1108 to 1115.

Dimensions

● SSD-X-12 to 25 (without switch)

ø12/ø16

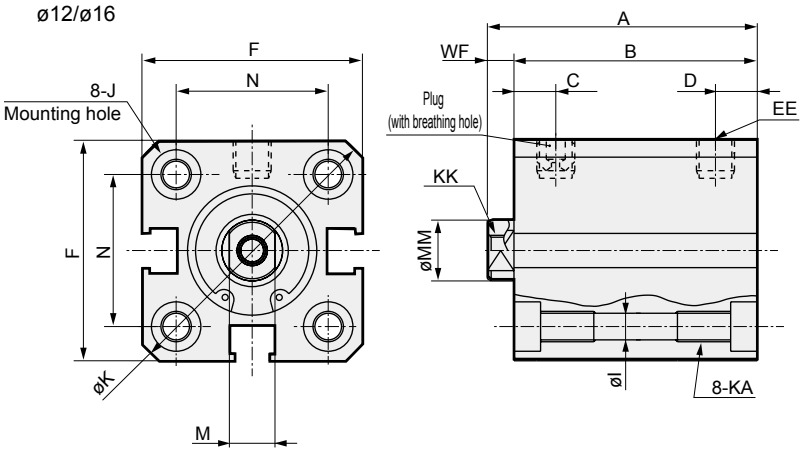

● Rod end male thread

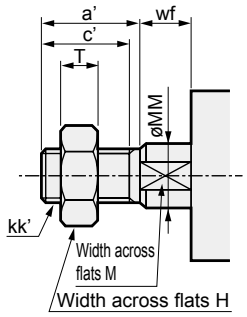

ø20/ø25

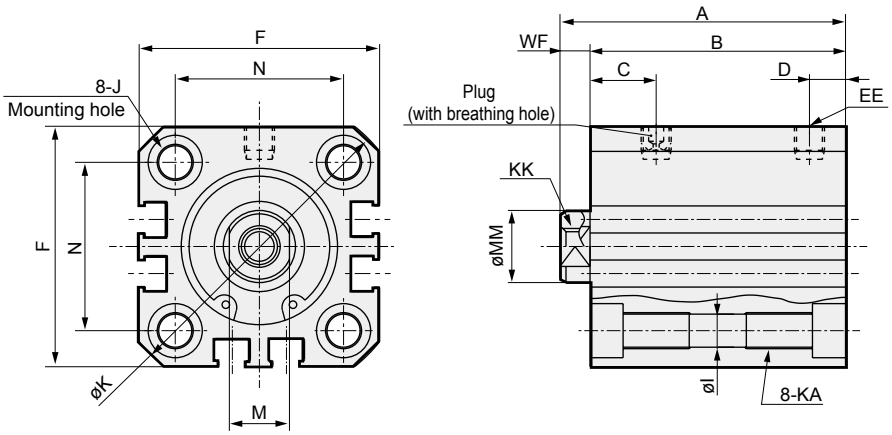

Code / Bore size (mm)			Dimensions without switch and common dimensions														
			A	B	C	D	EE	F	I	J	K	KA	KK	M	MM	N	WF
ø12	Stroke mm	5	25.5	22	5.5	5.5	M5	25	3.5	6.5 spot face depth 3.5	32	M4 depth 7	M3 depth 6	5	6	15.5	3.5
		10	30.5	27													
ø16	Stroke mm	5	25.5	22	5.5	5.5	M5	29	3.5	6.5 spot face depth 3.5	38	M4 depth 7	M4 depth 8	6	8	20	3.5
		10	30.5	27													
ø20	Stroke mm	5	29	24.5	8	5.5	M5	36	5.5	9 spot face depth 5.5	47	M6 depth 11	M5 depth 7	8	10	25.5	4.5
		10	34	29.5													
ø25	Stroke mm	5	32.5	27.5	11	6	M5	40	5.5	9 spot face depth 5.5	51	M6 depth 11	M6 depth 12	10	12	28	5
		10	37.5	32.5													

Dimensions of rod end male thread

Code / Bore size (mm)	a'	c'	H	kk'	M	MM	T	wf
ø 12	10.5	9	8	M5	5	6	3.2	3.5
ø 16	12	10	10	M6	6	8	3.6	3.5
ø 20	14	12	13	M8	8	10	5	4.5
ø 25	17.5	15	17	M10×1.25	10	12	6	5

*1: For dimensions of individual accessories, refer to pages 1108 to 1115.

Dimensions

● SSD-XL-32 to 50 (with switch)

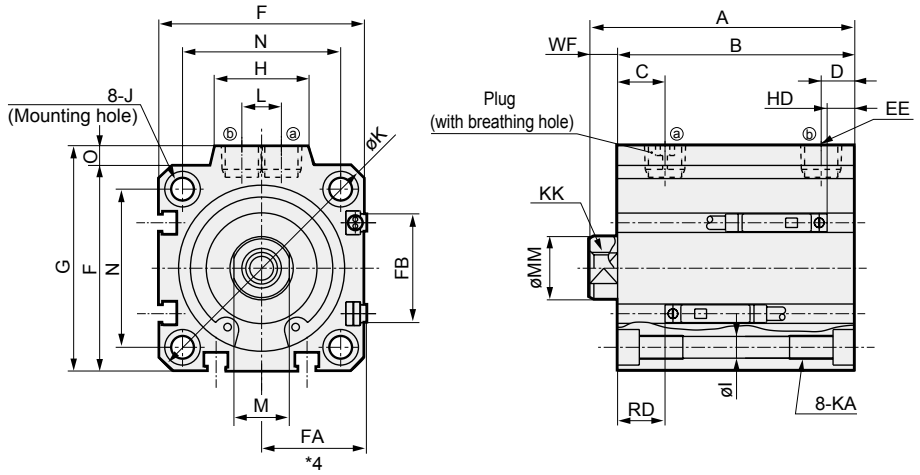

● Rod end male thread

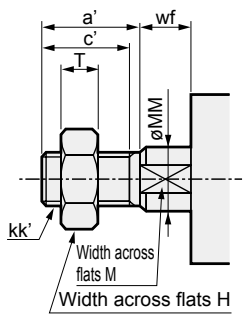

● SSD-X-32 to 50 (without switch)

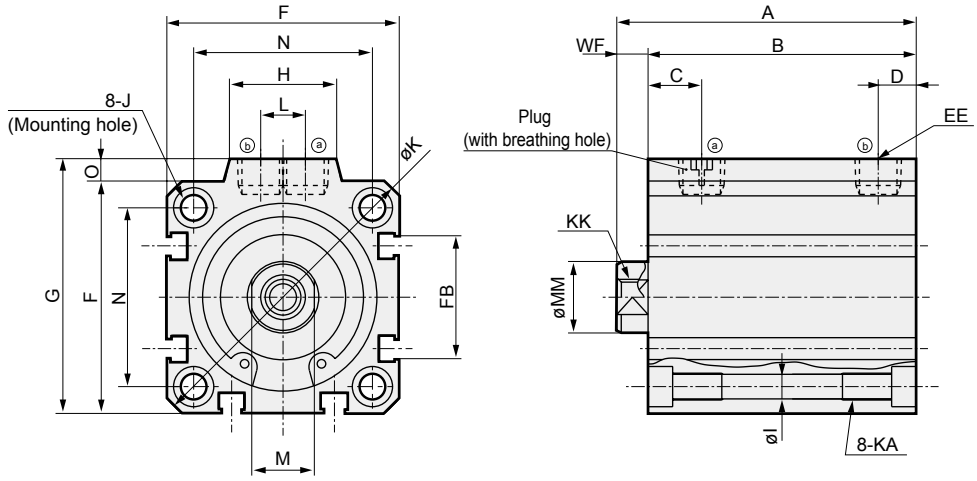

Code / Bore size (mm)		Without switch A	Without switch B	Common dimensions with switch A	B	C	D	EE	F	FA *4	FB	G	H	I	J	K	KA	KK	L	M	MM	N	O	WF
ø32	Stroke mm 5	35	28	45	38	8	8	Rc1/8	45	23 (26.5)	20.5	49.5	24	5.5	9 spot face depth 5.5	60	M6 Depth 11	M8 Depth 13	10	14	16	34	4.5	7
	Stroke mm 10	40	33	50	43																			
ø40	Stroke mm 10	46.5	39.5	56.5	49.5	12	8.5	Rc1/8	52	26.5 (30)	27.5	57	24	5.5	9 spot face depth 5.5	69	M6 Depth 11	M8 Depth 13	10	14	16	40	5	7
	Stroke mm 20	56.5	49.5	66.5	59.5																			
ø50	Stroke mm 10	48.5	40.5	58.5	50.5	10.5	10.5	Rc1/4	64	32.5 (36)	28.5	71	33	6.9	11 spot face depth 6.5	86	M8 Depth 13	M10 Depth 15	15	17	20	50	7	8
	Stroke mm 20	58.5	50.5	68.5	60.5																			

Dimensions of rod end male thread

Code / Bore size (mm)	a'	c'	H	kk'	M	MM	T	wf
ø 32	23.5	20.5	22	M14×1.5	14	16	8	5
ø 40	23.5	20.5	22	M14×1.5	14	16	8	5
ø 50	28.5	26	27	M18×1.5	17	20	11	5

Switch dimensions	Reed T0H/T0V, T5H/T5V		Proximity T2H/T2V, T3H/T3V T2WH/T2WV, T3WH/T3WV	
Bore size (mm)	HD *1	RD *1	HD *1	RD *1
ø32	3.5	9	3.5	9
ø40	7	12	7	12
ø50	7.5	12.5	7.5	12.5

- *1 : HD and RD dimensions for 5 mm stroke length differ from these dimensions according to the setting.
- *2: Refer to page 1313 for HD and RD dimensions of the 2-color display, off-delay, AC magnetic field proof, T1* and T8* switches.
- *3: Refer to page 1313 for the protruding dimensions of the 2-color display, off-delay, AC magnetic field proof, T1* and T8* switches.
- *4 : Dimensions in ( ) of FA are for the radial lead wire.
- *5: For dimensions of individual accessories, refer to pages 1108 to 1115.

Note: Refer to pages 1320 to 1325 for dimensions including the accessories and pages 1108 to 1115 for dimensions of individual accessories.

Dimensions

● SSD-YL-12 to 25 (with switch)

ø12/ø16

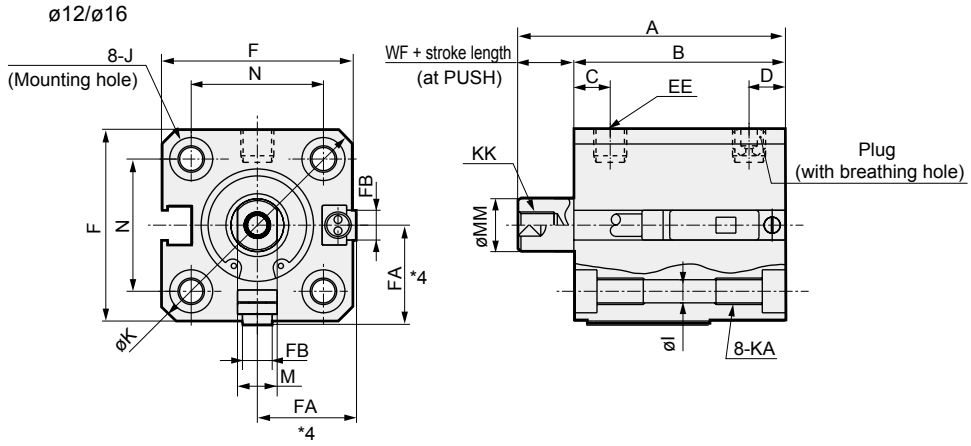

● Rod end male thread

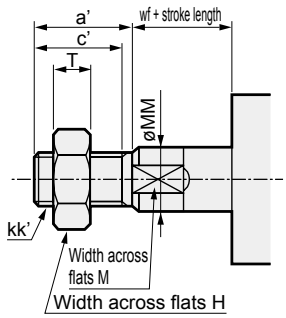

ø20/ø25

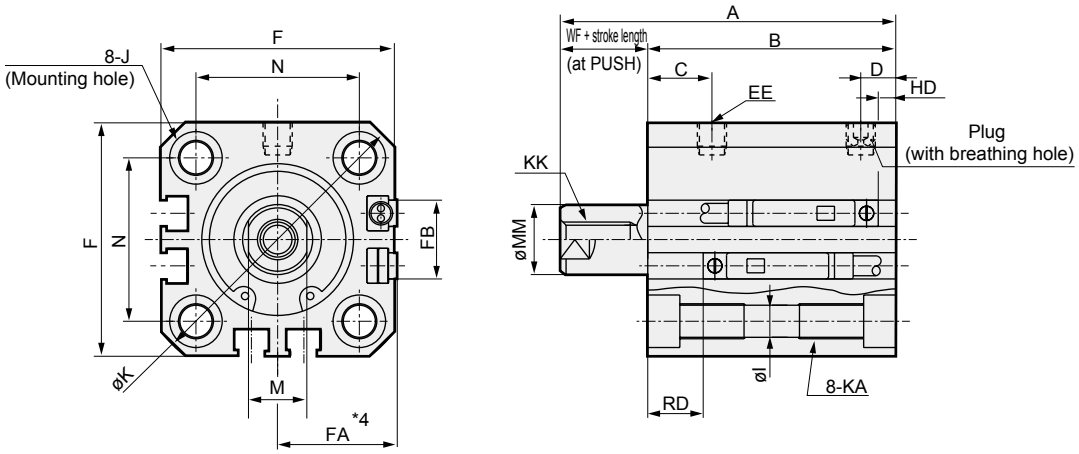

Code / Bore size (mm)			Common dimensions with switch																
			A	B	C	D	EE	F	FA *4	FB	I	J	K	KA	KK	M	MM	N	WF
ø12	Stroke mm	5	40.5	32	5.5	5.5	M5	25	13 (16.5)	4.5	3.5	6.5 spot face depth 3.5	32	M4 depth 7	M3 depth 6	5	6	15.5	3.5
		10	45.5																
ø16	Stroke mm	5	40.5	32	5.5	5.5	M5	29	15 (18.5)	4.5	3.5	6.5 spot face depth 3.5	38	M4 depth 7	M4 depth 8	6	8	20	3.5
		10	45.5																
ø20	Stroke mm	5	44	34.5	8	5.5	M5	36	18.5 (22)	12.5	5.5	9 spot face depth 5.5	47	M6 depth 11	M5 depth 7	8	10	25.5	4.5
		10	54	39.5															
ø25	Stroke mm	5	47.5	37.5	11	6	M5	40	20.5 (24)	13.5	5.5	9 spot face depth 5.5	51	M6 depth 11	M6 depth 12	10	12	28	5
		10	57.5	42.5															

Dimensions of rod end male thread

Code / Bore size (mm)	a'	c'	H	kk'	M	MM	T	wf
ø 12	10.5	9	8	M5	5	6	3.2	3.5
ø 16	12	10	10	M6	6	8	3.6	3.5
ø 20	14	12	13	M8	8	10	5	4.5
ø 25	17.5	15	17	M10×1.25	10	12	6	5

Switch dimensions / Bore size (mm)	Reed T0H/T0V, T5H/T5V		Proximity T2H/T2V, T3H/T3V T2WH/T2WV, T3WH/T3WV	
	HD *1	RD *1	HD *1	RD *1
ø12	0	2.5	0	2.5
ø16	0	2	0	2
ø20	3	6.5	3	6.5
ø25	3	9.5	3	9.5

- *1 : HD and RD dimensions for 5 mm stroke length differ from these dimensions according to the setting.
- *2: Refer to page 1312 for HD and RD dimensions of the 2-color display, off-delay, AC magnetic field proof, T1* and T8* switches.
- *3: Refer to page 1312 for the protruding dimensions of the 2-color display, off-delay, AC magnetic field proof, T1* and T8* switches.
- *4 : Dimensions in ( ) of FA are for the radial lead wire.
- *5: For dimensions of individual accessories, refer to pages 1108 to 1115.

SCP*3
CMK2
CMA2
SCM
SCG
SCA2
SCS2
CKV2
CAV2/COVP/N2
SSD2
SSG
SSD
CAT
MDC2
MVC
SMG
MSD/MSDG
FC*
STK
SRL3
SRG3
SRM3
SRT3
MRL2
MRG2
SM-25
ShkAbs
FJ
FK
Spd Contr
Ending

Dimensions CAD

● SSD-Y-12 to 25 (without switch)

● Rod end male thread

ø12/ø16

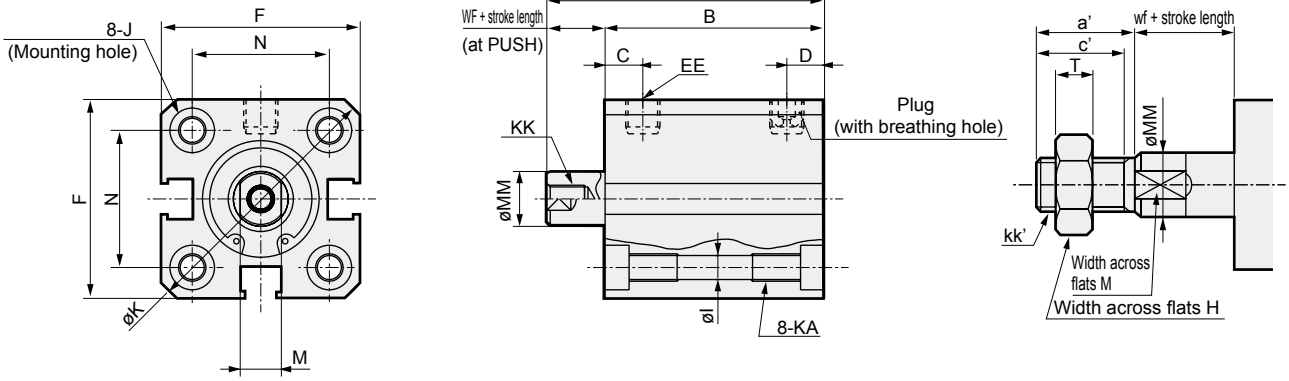

ø20/ø25

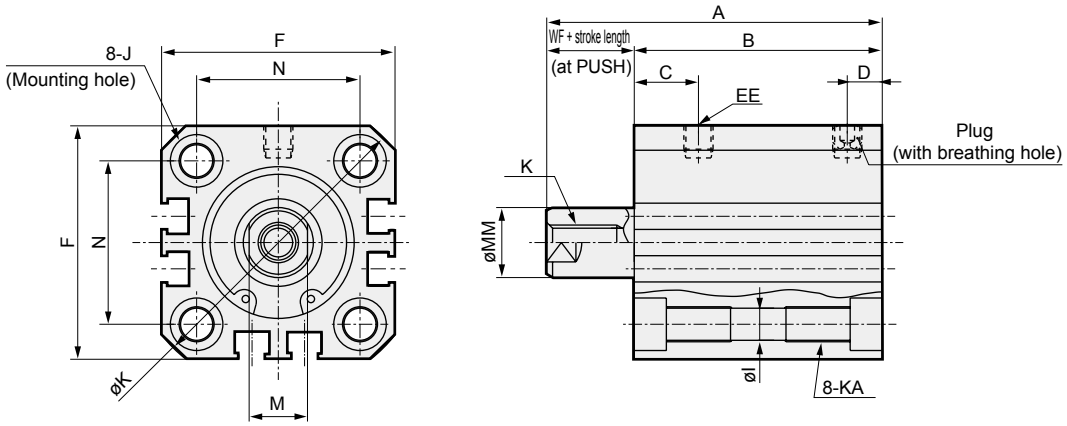

Code / Bore size (mm)			Without switch A	B	C	D	EE	F	I	J	K	KA	KK	M	MM	N	WF
ø12	Stroke mm	5	30.5	22	5.5	5.5	M5	25	3.5	6.5 spot face depth 3.5	32	M4 depth 7	M3 depth 6	5	6	15.5	3.5
		10	40.5	27													
ø16	Stroke mm	5	30.5	22	5.5	5.5	M5	29	3.5	6.5 spot face depth 3.5	38	M4 depth 7	M4 depth 8	6	8	20	3.5
		10	40.5	27													
ø20	Stroke mm	5	34	24.5	8	5.5	M5	36	5.5	9 spot face depth 5.5	47	M6 depth 11	M5 depth 7	8	10	25.5	4.5
		10	44	29.5													
ø25	Stroke mm	5	37.5	27.5	11	6	M5	40	5.5	9 spot face depth 5.5	51	M6 depth 11	M6 depth 12	10	12	28	5
		10	47.5	32.5													

Dimensions of rod end male thread

Code / Bore size (mm)	a'	c'	H	kk'	M	MM	T	wf
ø 12	10.5	9	8	M5	5	6	3.2	3.5
ø 16	12	10	10	M6	6	8	3.6	3.5
ø 20	14	12	13	M8	8	10	5	4.5
ø 25	17.5	15	17	M10×1.25	10	12	6	5

*1: For dimensions of individual accessories, refer to pages 1108 to 1115.

Dimensions

● SSD-YL-32 to 50 (with switch)

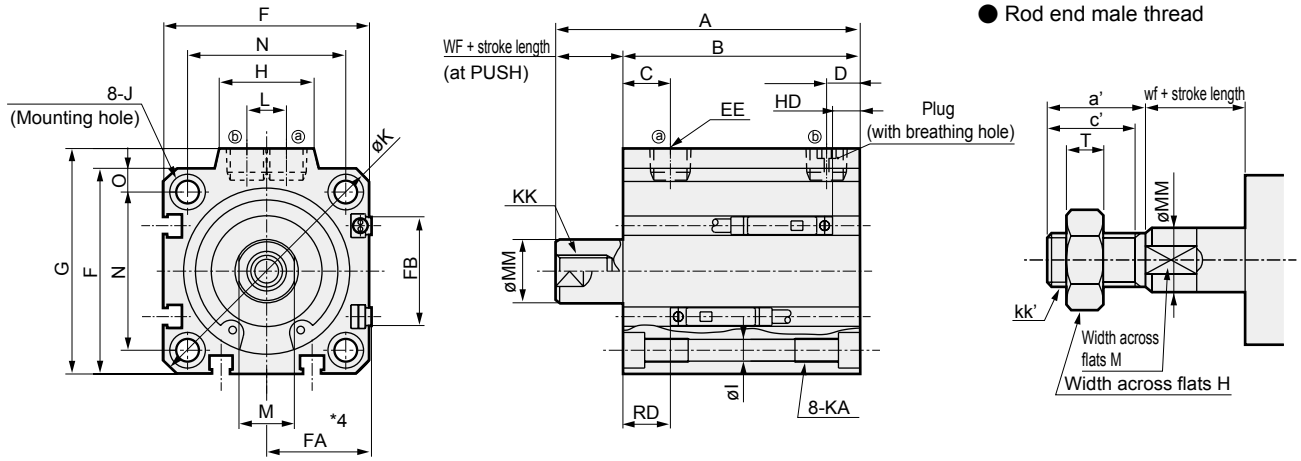

● SSD-Y-32 to 50 (without switch)

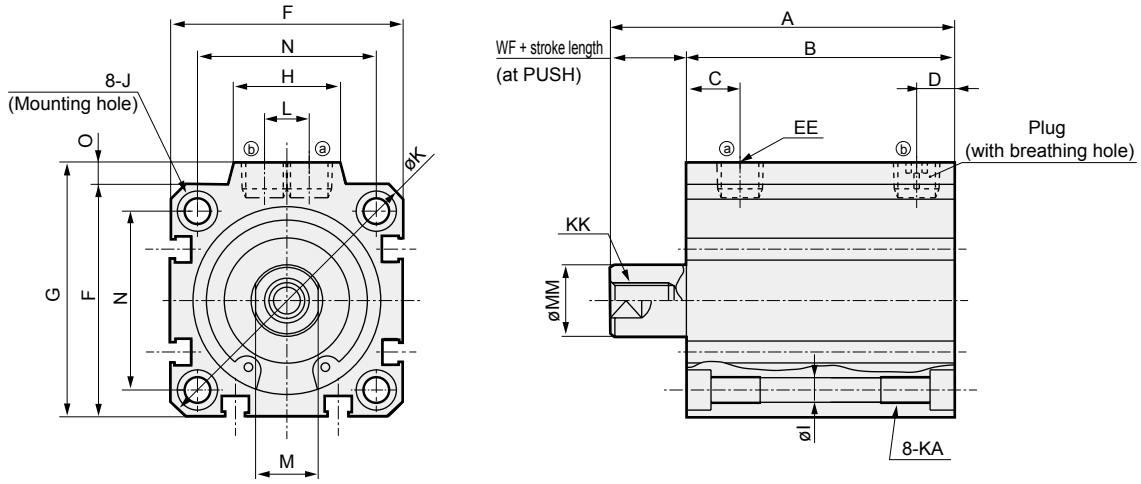

Code / Bore size (mm)			Without switch A	Without switch B	Common dimensions with switch A	B	C	D	EE	F	FA *4	FB	G	H	I	J	K	KA	KK	L	M	MM	N	O	WF
ø32	Stroke mm	5	40	28	50	38	8	8	Rc 1/8	45	23 (26.5)	20.5	49.5	24	5.5	9 spot face depth 5.5	60	M6 Depth 11	M8 Depth 13	10	14	16	34	4.5	7
		10	50	33	60	43																			
ø40	Stroke mm	10	56.5	39.5	66.5	49.5	12	8.5	Rc 1/8	52	26.5 (30)	27.5	57	24	5.5	9 spot face depth 5.5	69	M6 Depth 11	M8 Depth 13	10	14	16	40	5	7
		20	76.5	49.5	86.5	59.5																			
ø50	Stroke mm	10	58.5	40.5	68.5	50.5	10.5	10.5	Rc 1/4	64	32.5 (36)	28.5	71	33	6.9	11 spot face depth 6.5	86	M8 Depth 13	M10 Depth 15	15	17	20	50	7	8
		20	78.5	50.5	88.5	60.5																			

Dimensions of rod end male thread

Code / Bore size (mm)	a'	c'	H	kk'	M	MM	T	wf
ø 32	23.5	20.5	22	M14×1.5	14	16	8	5
ø 40	23.5	20.5	22	M14×1.5	14	16	8	5
ø 50	28.5	26	27	M18×1.5	17	20	11	5

Switch dimensions	Reed T0H/T0V, T5H/T5V		Proximity T2H/T2V, T3H/T3V T2WH/T2WV, T3WH/T3WV	
Bore size (mm)	HD *1	RD *1	HD *1	RD *1
ø32	3.5	9	3.5	9
ø40	7	12	7	12
ø50	7.5	12.5	7.5	12.5

- *1 : HD and RD dimensions for 5 mm stroke length differ from these dimensions according to the setting.
- *2: Refer to page 1313 for HD and RD dimensions of the 2-color display, off-delay, AC magnetic field proof, T1* and T8* switches.
- *3: Refer to page 1313 for the protruding dimensions of the 2-color display, off-delay, AC magnetic field proof, T1* and T8* switches.
- *4 : Dimensions in ( ) of FA are for the radial lead wire.
- *5: For dimensions of individual accessories, refer to pages 1108 to 1115.

Note: Refer to pages 1320 to 1325 for dimensions including the accessories and pages 1108 to 1115 for dimensions of individual accessories.

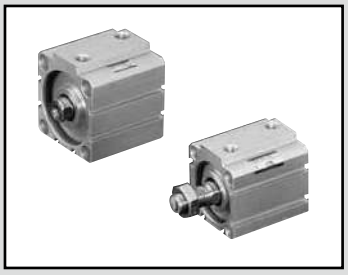

Compact cylinder double acting/heat resistant

SSD-T Series

● Bore size: ø12/ø16/ø20/ø25/ø32/ø40/ø50/ø63/ø83/ø100

JIS symbol

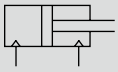

RoHS CAD

Specifications

Item	SSD-T									
Bore size mm	ø12	ø16	ø20	ø25	ø32	ø40	ø50	ø63	ø80	ø100
Actuation	Double acting									
Working fluid	Compressed air									
Max. working pressure MPa	1.0 (≈150 psi, 10 bar)									
Min. working pressure MPa	0.1 (≈15 psi, 1 bar)							0.05 (≈7.3 psi, 0.5 bar)		
Proof pressure MPa	1.6 (≈230 psi, 16 bar)									
Ambient temperature °C	5 (41°F) to 120 (248°F)									
Port size	M5				Rc 1/8		Rc 1/4		Rc 3/8	
Stroke tolerance mm	+1.0 0									
Working piston speed mm/s	50 to 500							50 to 300		
Cushion	None									
Lubrication *1	Not available									
Allowable absorbed energy J	0.004	0.01	0.016	0.021	0.025	0.092	0.1	0.12	0.27	0.56

*1: Periodically apply additional heat-resistant grease.

Stroke length

Bore size (mm)	Standard stroke length (mm)	Max. stroke length (mm)	Min. stroke length (mm)
ø12	5, 10, 15, 20, 25, 30	30	1
ø16			
ø20			
ø25	5, 10, 15, 20, 25, 30, 40, 50	50	
ø32			
ø40			
ø50			
ø63	5, 10, 20, 30, 40, 50	50	
ø80			
ø100			

*1) The custom stroke length is available in 1 mm increments. However, the total length is the same as that of the next longer standard stroke length.
*2) Refer to pages 1320 and 1321 for the min. stroke length with mounting brackets LB and LB2.

(Unit: g)

Cylinder weight table

Stroke length (mm) / Bore size (mm)	5	10	15	20	25	30	40	50
ø12	36	44	53	61	70	72	—	—
ø16	48	59	69	80	91	102	—	—
ø20	63	75	88	101	113	126	—	—
ø25	87	102	118	134	150	165	197	228
ø32	122	144	166	188	209	231	275	318
ø40	183	210	236	263	290	316	369	422
ø50	299	341	383	425	467	510	594	678
ø63	452	507	—	617	—	727	838	948
ø80	841	928	—	1101	—	1274	1448	1621
ø100	1319	1433	—	1660	—	1888	2115	2343

Theoretical thrust table

(Unit: N)

Bore size (mm)	Operating direction	Working pressure MPa											
		0.05	0.1	0.15	0.2	0.3	0.4	0.5	0.6	0.7	0.8	0.9	1.0
ø12	Push	-	11.3	17.0	22.6	33.9	45.2	56.5	67.9	79.2	90.5	1.02×10^2	1.13×10^2
	Pull	-	8.48	12.7	17.0	25.4	33.9	42.4	50.9	59.4	67.9	76.3	84.8
ø16	Push	-	20.1	30.2	40.2	60.3	80.4	1.01×10^2	1.21×10^2	1.41×10^2	1.61×10^2	1.81×10^2	2.01×10^2
	Pull	-	15.1	22.6	30.2	45.2	60.3	75.4	90.5	1.06×10^2	1.21×10^2	1.36×10^2	1.51×10^2
ø20	Push	-	31.4	47.1	62.8	94.2	1.26×10^2	1.57×10^2	1.88×10^2	2.20×10^2	2.51×10^2	2.83×10^2	3.14×10^2
	Pull	-	23.6	35.3	47.1	70.7	94.2	1.18×10^2	1.41×10^2	1.65×10^2	1.88×10^2	2.12×10^2	2.36×10^2
ø25	Push	-	49.1	73.6	98.2	1.47×10^2	1.96×10^2	2.45×10^2	2.95×10^2	3.44×10^2	3.93×10^2	4.42×10^2	4.91×10^2
	Pull	-	37.8	56.7	75.6	1.13×10^2	1.51×10^2	1.89×10^2	2.27×10^2	2.64×10^2	3.02×10^2	3.40×10^2	3.78×10^2
ø32	Push	-	80.4	1.21×10^2	1.61×10^2	2.41×10^2	3.22×10^2	4.02×10^2	4.83×10^2	5.63×10^2	6.43×10^2	7.24×10^2	8.04×10^2
	Pull	-	60.3	90.5	1.21×10^2	1.81×10^2	2.41×10^2	3.02×10^2	3.62×10^2	4.22×10^2	4.83×10^2	5.43×10^2	6.03×10^2
ø40	Push	-	1.26×10^2	1.88×10^2	2.51×10^2	3.77×10^2	5.03×10^2	6.28×10^2	7.54×10^2	8.80×10^2	1.01×10^3	1.13×10^3	1.26×10^3
	Pull	-	1.06×10^2	1.58×10^2	2.11×10^2	3.17×10^2	4.22×10^2	5.28×10^2	6.33×10^2	7.39×10^2	8.44×10^2	9.50×10^2	1.06×10^3
ø50	Push	-	1.96×10^2	2.95×10^2	3.93×10^2	5.89×10^2	7.85×10^2	9.82×10^2	1.18×10^3	1.37×10^3	1.57×10^3	1.77×10^3	1.96×10^3
	Pull	-	1.65×10^2	2.47×10^2	3.30×10^2	4.95×10^2	6.60×10^2	8.25×10^2	9.90×10^2	1.15×10^3	1.32×10^3	1.48×10^3	1.65×10^3
ø63	Push	1.56×10^2	3.12×10^2	4.68×10^2	6.23×10^2	9.35×10^2	1.25×10^3	1.56×10^3	1.87×10^3	2.18×10^3	2.49×10^3	2.81×10^3	3.12×10^3
	Pull	1.40×10^2	2.80×10^2	4.20×10^2	5.61×10^2	8.41×10^2	1.12×10^3	1.40×10^3	1.68×10^3	1.96×10^3	2.24×10^3	2.52×10^3	2.80×10^3
ø80	Push	2.51×10^2	5.03×10^2	7.54×10^2	1.01×10^3	1.51×10^3	2.01×10^3	2.51×10^3	3.02×10^3	3.52×10^3	4.02×10^3	4.52×10^3	5.03×10^3
	Pull	2.27×10^2	4.54×10^2	6.80×10^2	9.07×10^2	1.36×10^3	1.81×10^3	2.27×10^3	2.72×10^3	3.17×10^3	3.63×10^3	4.08×10^3	4.54×10^3
ø100	Push	3.93×10^2	7.85×10^2	1.18×10^3	1.57×10^3	2.36×10^3	3.14×10^3	3.93×10^3	4.71×10^3	5.50×10^3	6.28×10^3	7.07×10^3	7.85×10^3
	Pull	3.57×10^2	7.15×10^2	1.07×10^3	1.43×10^3	2.14×10^3	2.86×10^3	3.57×10^3	4.29×10^3	5.00×10^3	5.72×10^3	6.43×10^3	7.15×10^3

SCP*3
CMK2
CMA2
SCM
SCG
SCA2
SCS2
CKV2
CAV2/COVP/N2
SSD2
SSG
SSD
CAT
MDC2
MVC
SMG
MSD/MSDG
FC*
STK
SRL3
SRG3
SRM3
SRT3
MRL2
MRG2
SM-25
ShkAbs
FJ
FK
Spd Contr
Ending

How to order

SSD-T - 12 ( ) - 5 - N - LB - I

Ⓐ Bore size
Ⓑ Port thread
Ⓒ Stroke length
Ⓓ Option *1
Ⓔ Mounting bracket *2 *3
Ⓕ Accessory *4

Code	Description
Ⓐ Bore size (mm)	
12	ø12
16	ø16
20	ø20
25	ø25
32	ø32
40	ø40
50	ø50
63	ø63
80	ø80
100	ø100
Ⓑ Port thread	
Blank	Rc thread
NN	NPT thread (ø32 and over) (made-to-order product)
GN	G thread (ø32 and over) (made-to-order product)
Ⓒ Stroke length (mm)	
Refer to the stroke length table below.	
Ⓓ Option	
Blank	Rod end female thread
N	Rod end male thread
M	Piston rod material (stainless steel)
Ⓔ Mounting bracket	
LB	Axial foot
LB2	Axial foot (compact)
CB	Clevis bracket (pin and snap ring included)
CB2	Clevis bracket (compact) (pin and snap ring included)
FA	Rod side flange
FB	Head side flange
Ⓕ Accessory (available when rod end male thread "N" is selected)	
I	Rod eye
I2	Rod eye (compact)
Y	Rod clevis (pin and snap ring included)
Y2	Rod clevis (compact) (pin and snap ring included)

⚠ Precautions for model No. selection

*1 : Piston rod of ø12 to ø25 is stainless steel as standard. C type snap ring is stainless steel instead of steel. The rod end male thread nut is stainless steel.
*2 : The mounting bracket is included at shipment.
*3 : The projection dimension of piston rod WF when LB2 or FA is selected is different from that of the standard. Refer to the dimensions on pages 1109 and 1110. The number of the specified protruding dimension will be added at the end of the model No. printed on the metal plate on the body.
*4 : "I" and "Y" cannot be selected together.
*5 : Refer to Ending Page 85 for custom specifications of rod end form.
*6 : Refer to pages 1086 and 1087 for combinations of variations/options.

[Example of model No.]

SSD-T-12-5-N

Model: Compact cylinder, heat resistance

Ⓐ Bore size : ø12 mm
Ⓑ Port thread : Rc thread
Ⓒ Stroke length : 5 mm
Ⓓ Option : Rod end male thread

(Stroke length table)

Stroke length (mm)		Applicable bore size									
		ø12	ø16	ø20	ø25	ø32	ø40	ø50	ø63	ø80	ø100
Standard stroke length	5	●	●	●	●	●	●	●	●	●	●
	10	●	●	●	●	●	●	●	●	●	●
	15	●	●	●	●	●	●	●			
	20	●	●	●	●	●	●	●	●	●	●
	25	●	●	●	●	●	●	●			
	30	●	●	●	●	●	●	●	●	●	●
	40				●	●	●	●	●	●	●
	50				●	●	●	●	●	●	●
Min. stroke length (mm)		1									
Max. stroke length (mm)		30			50						
Custom stroke length *1		In 1 mm increments									

*1 : The total length is the same as that of the next longer standard stroke length.
*2 : Refer to pages 1320 and 1321 for the min. stroke length with mounting brackets LB and LB2.

How to order mounting bracket

Bore size (mm) / Mounting bracket	ø12	ø16	ø20	ø25	ø32	ø40	ø50	ø63	ø80	ø100
Foot (LB)	SSD-LB-12	SSD-LB-16	SSD-LB-20	SSD-LB-25	SSD-LB-32	SSD-LB-40	SSD-LB-50	SSD-LB-63	SSD-LB-80	SSD-LB-100
Foot (LB2)	SSD-LB2-12	SSD-LB2-16	SSD-LB2-20	SSD-LB2-25	SSD-LB2-32	SSD-LB2-40	SSD-LB2-50	SSD-LB2-63	SSD-LB2-80	SSD-LB2-100
Flange (FA/FB)	SSD-FA-12	SSD-FA-16	SSD-FA-20	SSD-FA-25	SSD-FA-32	SSD-FA-40	SSD-FA-50	SSD-FA-63	SSD-FA-80	SSD-FA-100
Clevis bracket (CB)	SSD-CB-12	SSD-CB-16	SSD-CB-20	SSD-CB-25	SSD-CB-32	SSD-CB-40	SSD-CB-50	SSD-CB-63	SSD-CB-80	SSD-CB-100
Clevis bracket (CB2)	SSD-CB2-12	SSD-CB2-16	SSD-CB2-20	SSD-CB2-25	SSD-CB2-32	SSD-CB2-40	SSD-CB2-50	SSD-CB2-63	SSD-CB2-80	SSD-CB2-100

*1: The foot mounting bracket is provided as 2 pcs./set.

Internal structure and parts list

● SSD-T-12 to 25

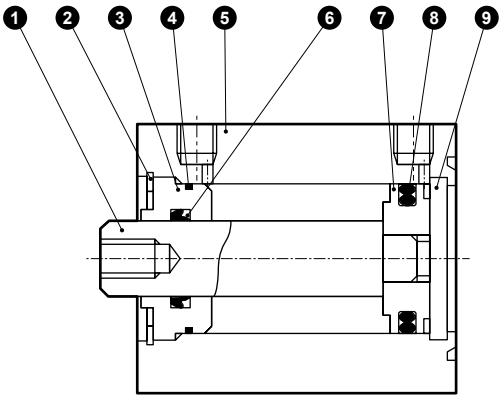

● SSD-T-32 to 50

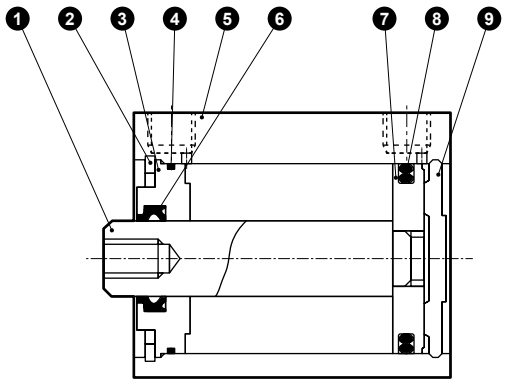

● SSD-T-63 to 100

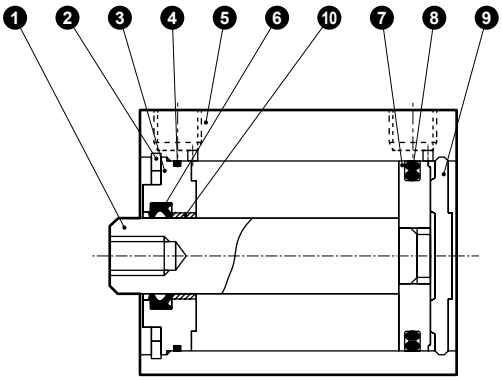

No.	Part name	Material	Remarks
1	Piston rod	ø12 to ø25: Stainless steel ø32 to ø100: Steel	ø16 to ø100: Industrial chrome plating
2	C type snap ring	Steel	Zinc phosphate
3	Rod metal	ø12 to ø50: Special aluminum ø63 to ø100: Aluminum alloy	Alumite
4	Rod metal gasket	Fluoro rubber	
5	Body	Aluminum alloy	Hard alumite
6	Rod packing	Fluoro rubber	

No.	Part name	Material	Remarks
7	Piston	ø12 to ø25: Aluminum alloy ø32 to ø100: Stainless steel	ø12 to 25: Chromate
8	Piston packing	Fluoro rubber	
9	Cover	ø12 to ø25: Stainless steel ø32 to ø100: Aluminum alloy	ø32 to ø100: Alumite
10	Bush	Oiles drymet	ø63 to ø100

Fluorine grease is used.

Repair parts list

Bore size (mm)	Kit No.	Repair parts No.
ø12	SSD-T-12K	❹ ❻ ❽
ø16	SSD-T-16K	
ø20	SSD-T-20K	
ø25	SSD-T-25K	
ø32	SSD-T-32K	
ø40	SSD-T-40K	
ø50	SSD-T-50K	
ø63	SSD-T-63K	
ø80	SSD-T-80K	
ø100	SSD-T-100K	

Dimensions

Same as double acting/single rod. Refer to pages 1103 to 1105.

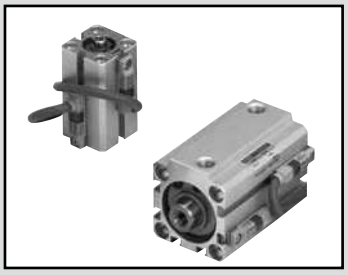

Compact cylinder double acting/with heat resistant cylinder switch

SSD-T1L Series

● Bore size: ø16/ø20/ø25/ø32/ø40/ø50/ø63

JIS symbol

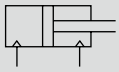

RoHS CAD

Specifications

1 MPa = 10 bar

Item	SSD-T1L						
Bore size mm	ø16	ø20	ø25	ø32	ø40	ø50	ø63
Actuation	Double acting						
Working fluid	Compressed air						
Max. working pressure MPa	1.0 (≈150 psi, 10 bar)						
Min. working pressure MPa	0.1 (≈15 psi, 1 bar)						0.05 (≈7.3 psi)
Proof pressure MPa	1.6 (≈230 psi, 16 bar)						
Ambient temperature °C	5 (41°F) to 150 (302°F) (*1)						
Port size	M5			Rc1/8		Rc1/4	
Stroke tolerance mm	+1.0 0						
Working piston speed mm/s	50 to 500						50 to 300
Cushion	None						
Lubrication (*2)	-						

*1: At an ambient temperature of 150°C, external leakage will occur gradually after approximately 500,000 uses.
*2: Periodically apply additional heat-resistant grease.

Stroke length

Bore size (mm)	Standard stroke length (mm)	Max. stroke length (mm)	Min. stroke length (mm)		
			With 1 switch	With 2 switches	With 3 switches
ø16	10/15/20/25/30	30	10	20	-
ø20	15/20/25/30		15	25	-
ø25	15/20/25/30/40/50	50		20	40
ø32	10/15/20/25/30/40/50		10		
ø40					
ø50					
ø63	10/20/30/40/50				

Note: The custom stroke length is available in 1 mm increments. However, the total length is the same as that of the next longer standard stroke length.

Cylinder switch specifications

Item	Reed 2-wire ET0H, ET0V	
Applications	For relay, programmable controller	
Load voltage	12/24 VDC	110 VAC
Load current	5 to 50 mA	7 to 20 mA
Internal voltage drop	3.0 V or less	
Leakage current	0 mA	
Indicator lamp	LED lit when ON (Note)	
Lead wire	Heat-resist fluorine-insulated sheathed wire 1 m (0.5 SQ (100/0.08) annealed copper wire x 2C)	
Insulation resistance	100 MΩ and over with 500 VDC megger	
Withstand voltage	No failure after 1 minute of 1,000 VAC application.	
Shock resistance	294 m/s²	
Ambient temperature	-10 to 150°C	
Degree of protection	IEC standards IP67, JIS C0920 (water tight type)	
Weight g	44	

Note: Indicator uses LED.
Visibility will gradually decrease with continuous use under high temperatures. As the LED light circuit is separated from the switch output circuit, the switch output works normally even if the LED light goes out.

Cylinder weight table (the weight of the switches is when there are 2 cylinder switches.)

(Unit: g)

Stroke length (mm) / Bore size (mm)	10	15	20	25	30	40	50
ø16	124	134	145	156	167	-	-
ø20	170	183	196	208	221	-	-
ø25	213	229	245	261	276	308	339
ø32	278	300	322	343	365	409	452
ø40	373	399	426	453	479	532	585
ø50	555	597	639	681	724	808	892
ø63	806	-	916	-	1026	1137	1247

Theoretical thrust table

(Unit: N)

Bore size (mm)	Operating direction	Working pressure MPa											
		0.05	0.1	0.15	0.2	0.3	0.4	0.5	0.6	0.7	0.8	0.9	1.0
ø16	Push	-	20.1	30.2	40.2	60.3	80.4	1.01×10^2	1.21×10^2	1.41×10^2	1.61×10^2	1.81×10^2	2.01×10^2
	Pull	-	15.1	22.6	30.2	45.2	60.3	75.4	90.5	1.06×10^2	1.21×10^2	1.36×10^2	1.51×10^2
ø20	Push	-	31.4	47.1	62.8	94.2	1.26×10^2	1.57×10^2	1.88×10^2	2.20×10^2	2.51×10^2	2.83×10^2	3.14×10^2
	Pull	-	23.6	35.3	47.1	70.7	94.2	1.18×10^2	1.41×10^2	1.65×10^2	1.88×10^2	2.12×10^2	2.36×10^2
ø25	Push	-	49.1	73.6	98.2	1.47×10^2	1.96×10^2	2.45×10^2	2.95×10^2	3.44×10^2	3.93×10^2	4.42×10^2	4.91×10^2
	Pull	-	37.8	56.7	75.6	1.13×10^2	1.51×10^2	1.89×10^2	2.27×10^2	2.64×10^2	3.02×10^2	3.40×10^2	3.78×10^2
ø32	Push	-	80.4	1.21×10^2	1.61×10^2	2.41×10^2	3.22×10^2	4.02×10^2	4.83×10^2	5.63×10^2	6.43×10^2	7.24×10^2	8.04×10^2
	Pull	-	60.3	90.5	1.21×10^2	1.81×10^2	2.41×10^2	3.02×10^2	3.62×10^2	4.22×10^2	4.83×10^2	5.43×10^2	6.03×10^2
ø40	Push	-	1.26×10^2	1.88×10^2	2.51×10^2	3.77×10^2	5.03×10^2	6.28×10^2	7.54×10^2	8.80×10^2	1.01×10^3	1.13×10^3	1.26×10^3
	Pull	-	1.06×10^2	1.58×10^2	2.11×10^2	3.17×10^2	4.22×10^2	5.28×10^2	6.33×10^2	7.39×10^2	8.44×10^2	9.50×10^2	1.06×10^3
ø50	Push	-	1.96×10^2	2.95×10^2	3.93×10^2	5.89×10^2	7.85×10^2	9.82×10^2	1.18×10^3	1.37×10^3	1.57×10^3	1.77×10^3	1.96×10^3
	Pull	-	1.65×10^2	2.47×10^2	3.30×10^2	4.95×10^2	6.60×10^2	8.25×10^2	9.90×10^2	1.15×10^3	1.32×10^3	1.48×10^3	1.65×10^3
ø63	Push	1.56×10^2	3.12×10^2	4.68×10^2	6.23×10^2	9.35×10^2	1.25×10^3	1.56×10^3	1.87×10^3	2.18×10^3	2.49×10^3	2.81×10^3	3.12×10^3
	Pull	1.40×10^2	2.80×10^2	4.20×10^2	5.61×10^2	8.41×10^2	1.12×10^3	1.40×10^3	1.68×10^3	1.96×10^3	2.24×10^3	2.52×10^3	2.80×10^3

SCP*3
CMK2
CMA2
SCM
SCG
SCA2
SCS2
CKV2
CAV2/COVP/N2
SSD2
SSG
SSD
CAT
MDC2
MVC
SMG
MSD/MSDG
FC*
STK
SRL3
SRG3
SRM3
SRT3
MRL2
MRG2
SM-25
ShkAbs
FJ
FK
Spd Contr
Ending

How to order

SSD-T1L - 16 ( ) - 10 - ET0H - D - N - LB - I

- SSD-T1L: Double acting/heat resistant with compact heat resistant switch
- Ⓐ Bore size
- Ⓑ Port thread
- Ⓒ Stroke length
- Ⓓ Switch model No. *7
- Ⓔ Switch quantity
- Ⓕ Option *1
- Ⓖ Mounting bracket *2 *3
- Ⓗ Accessory *4

Code	Description
Ⓐ Bore size (mm)	
16	ø16
20	ø20
25	ø25
32	ø32
40	ø40
50	ø50
63	ø63
Ⓑ Port thread	
Blank	Rc thread
NN	NPT thread (ø32 and over) (made-to-order product)
GN	G thread (ø32 and over) (made-to-order product)
Ⓒ Stroke length (mm)	
Refer to the stroke length table on the following page.	

Ⓓ Switch model No.				
ET0H	Reed	DC/AC	2-wire	Axial lead wire
ET0V				Radial lead wire

Ⓔ Switch quantity	
R	1 on rod side
H	1 on head side
D	2
Ⓕ Option	
Blank	Rod end female thread
N	Rod end male thread
M	Piston rod material (stainless steel)
Ⓖ Mounting bracket	
LB	Axial foot
LB2	Axial foot (compact)
CB	Clevis bracket (pin and snap ring included)
CB2	Clevis bracket (compact) (pin and snap ring included)
FA	Rod side flange
FB	Head side flange
Ⓗ Accessory (available when rod end male thread "N" is selected)	
I	Rod eye
I2	Rod eye (compact)
Y	Rod clevis (pin and snap ring included)
Y2	Rod clevis (compact) (pin and snap ring included)

⚠ Precautions for model No. selection

*1 : Piston rod of ø12 to ø25 is stainless steel as standard. C type snap ring is stainless steel instead of steel. The rod end male thread nut is stainless steel.
*2 : The mounting bracket is included at shipment.
*3 : The projection dimension of piston rod WF when LB2 or FA is selected is different from that of the standard. Refer to the dimensions on pages 1109 and 1110. The number of the specified protruding dimension will be added at the end of the model No. printed on the metal plate on the body.
*4 : "I" and "Y" cannot be selected together.
*5 : Refer to Ending Page 85 for custom specifications of rod end form.
*6 : Refer to pages 1086 and 1087 for combinations of variations/options.
*7 : Switches are shipped with the product. Contact CKD if assembling before shipment is necessary.

[Example of model No.]

SSD-T1L-16-10-ET0H-D-N

Model: Compact cylinder
With heat resistant cylinder switch

Ⓐ Bore size : ø16
Ⓑ Port thread : Rc thread
Ⓒ Stroke length :10 mm
Ⓓ Switch model No. : Reed switch ETOH, lead wire length 1 m
Ⓔ Switch quantity : 2
Ⓕ Option : Rod end male thread

[Stroke length table]

Stroke length (mm)		Applicable bore size						
		ø16	ø20	ø25	ø32	ø40	ø50	ø63
Standard stroke length	10	●			●	●	●	●
	15	●	●	●	●	●	●	
	20	●	●	●	●	●	●	●
	25	●	●	●	●	●	●	
	30	●	●	●	●	●	●	●
	40			●	●	●	●	●
	50			●	●	●	●	●
Min. stroke length (mm) *1		10(20)	15(25)	15(20)	10(20)			
Max. stroke length (mm)		30		50				
Custom stroke length (mm) *2		In 1 mm increments						

*1 : The value in ( ) is for types with two switches.
Refer to page 1142 for the number of installed switches and the min. stroke length.
*2 : The total length is the same as that of the next longer standard stroke length.

How to order switch

SW - ET0H

Switch model No.
(Item Ⓓ on page 1144)

How to order mounting bracket

Bore size (mm) / Mounting bracket	ø16	ø20	ø25	ø32	ø40	ø50	ø63
Foot (LB)	SSD-LB-16	SSD-LB-20	SSD-LB-25	SSD-LB-32	SSD-LB-40	SSD-LB-50	SSD-LB-63
Foot (LB2)	SSD-LB2-16	SSD-LB2-20	SSD-LB2-25	SSD-LB2-32	SSD-LB2-40	SSD-LB2-50	SSD-LB2-63
Flange (FA/FB)	SSD-FA-16	SSD-FA-20	SSD-FA-25	SSD-FA-32	SSD-FA-40	SSD-FA-50	SSD-FA-63
Clevis bracket (CB)	SSD-CB-16	SSD-CB-20	SSD-CB-25	SSD-CB-32	SSD-CB-40	SSD-CB-50	SSD-CB-63
Clevis bracket (CB2)	SSD-CB2-16	SSD-CB2-20	SSD-CB2-25	SSD-CB2-32	SSD-CB2-40	SSD-CB2-50	SSD-CB2-63

*1: The foot mounting bracket is provided as 2 pcs./set.

Internal structure and parts list (ø16 to ø32)

● SSD-T1L-16

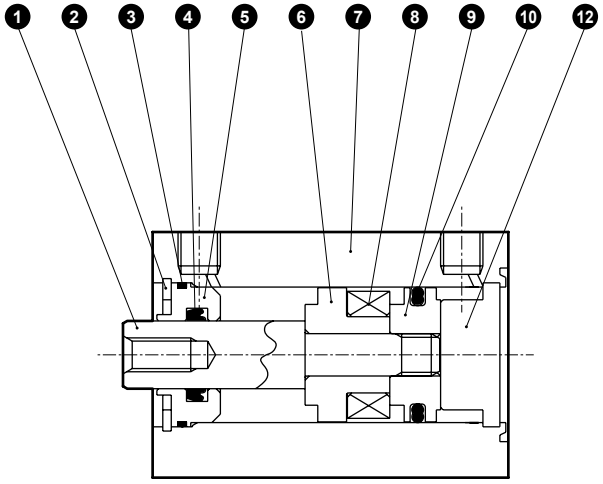

● SSD-T1L-20/25

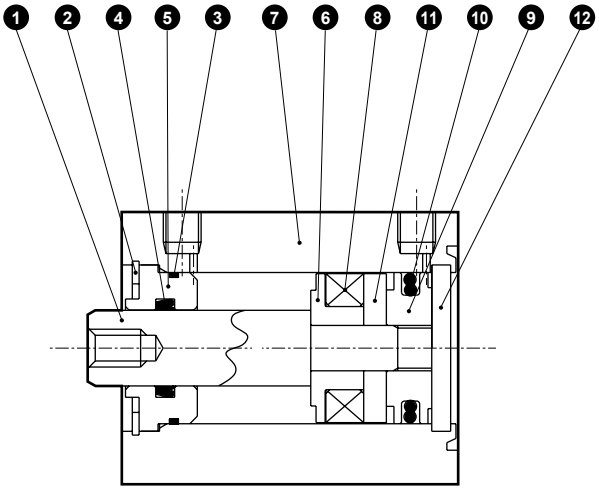

● SSD-T1L-32

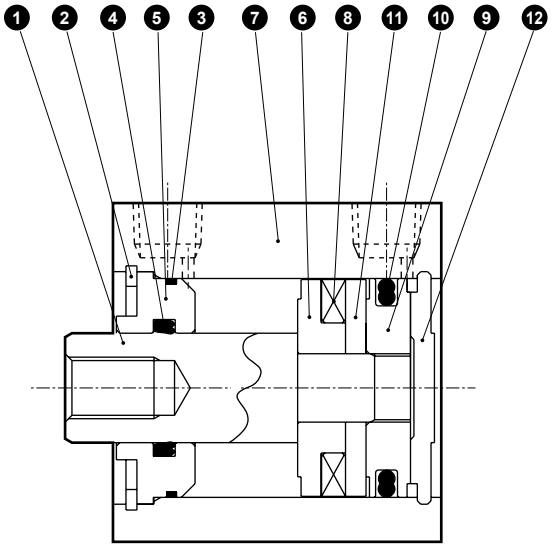

No.	Part name	Material	Remarks	No.	Part name	Material	Remarks
1	Piston rod	ø16 to ø25: Stainless steel ø32: Steel	Industrial chrome plating	8	Magnet	Special alloy	
2	C type snap ring	Steel	Zinc phosphate	9	Piston	ø16 to ø25: Aluminum alloy ø32: Stainless steel	ø16 to ø25: Chromate
3	Rod metal gasket	Fluoro rubber		10	Piston packing	Fluoro rubber	
4	Rod packing	Fluoro rubber		11	Spacer	Aluminum alloy	Chromate
5	Rod metal	Special aluminum	Alumite	12	Cover	ø16 to ø25: Stainless steel ø32: Aluminum alloy	ø32: Alumite
6	Spacer (for magnet)	Aluminum alloy	Chromate				
7	Cylinder body	Aluminum alloy	Hard alumite				

Fluorine grease is used.

Repair parts list (ø16 to ø32)

Bore size (mm)	Kit No.	Repair parts No.
ø16	SSD-T-16K	❸ ❹ ❿
ø20	SSD-T-20K	
ø25	SSD-T-25K	
ø32	SSD-T-32K	

Internal structure and parts list (ø40 to ø63)

● SSD-T1L-40/50

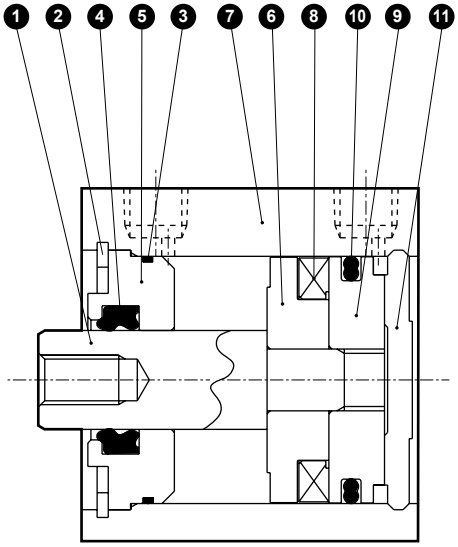

● SSD-T1L-63

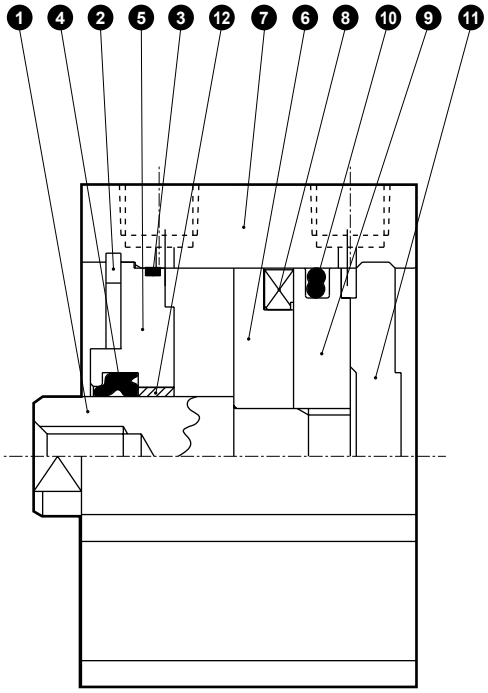

No.	Part name	Material	Remarks	No.	Part name	Material	Remarks
1	Piston rod	Steel	Industrial chrome plating	7	Cylinder body	Aluminum alloy	Hard alumite
2	C type snap ring	Steel	Zinc phosphate	8	Magnet	Plastic	
3	Rod metal gasket	Fluoro rubber		9	Piston	Stainless steel	
4	Rod packing	Fluoro rubber		10	Piston packing	Fluoro rubber	
5	Rod metal	ø40, ø50: Special aluminum ø63: Aluminum alloy	Chromate	11	Cover	Aluminum alloy	Alumite
				12	Bush	Oiles drymet	
6	Spacer (for magnet)	Aluminum alloy	Chromate				

Fluorine grease is used.

Repair parts list (ø40 to ø63)

Bore size (mm)	Kit No.	Repair parts No.
ø40	SSD-T-40K	❸ ❹ ❿
ø50	SSD-T-50K	
ø63	SSD-T-63K	

SCP*3
CMK2
CMA2
SCM
SCG
SCA2
SCS2
CKV2
CAV2/COVP/N2
SSD2
SSG
SSD
CAT
MDC2
MVC
SMG
MSD/MSDG
FC*
STK
SRL3
SRG3
SRM3
SRT3
MRL2
MRG2
SM-25
ShkAbs
FJ
FK
Spd Contr
Ending

Dimensions (ø16 to ø25)

● SSD-T1L-16

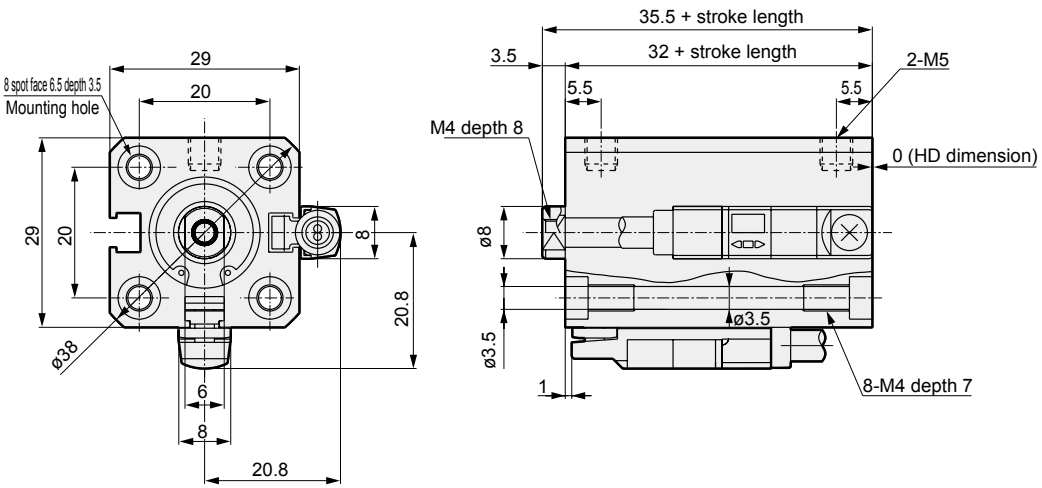

● Rod end male thread

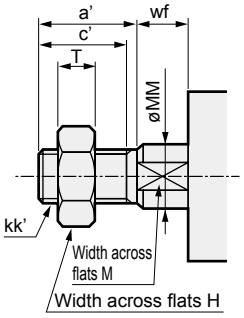

● SSD-T1L-20/25

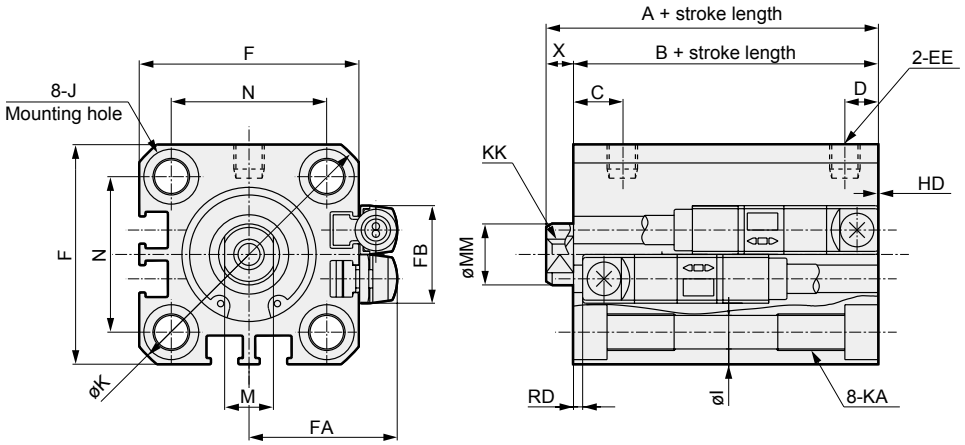

Code / Bore size	Basic dimensions A (*1)	B (*1)	C	D	EE	F	FA	FB	G	H	I	J	K	KA	KK
ø20	34	29.5	8	5.5	M5	36	24.3	16	-	-	5.5	Spot face 9 depth 5.5	47	M6 depth 11	M5 depth 7
ø25	37.5	32.5	11	6	M5	40	26.3	17	-	-	5.5	Spot face 9 depth 5.5	51	M6 depth 11	M6 depth 12

Code / Bore size	Basic dimensions L	M	MM	N	O	X	Dimensions with switch reed ET0H/ET0V HD	RD
ø20	-	8	10	25.5	-	4.5	0	0
ø25	-	10	12	28	-	5	0.5	1.0

*1 : To calculate A+ stroke length or B+ stroke length when using custom stroke length, apply the next alonger standard stroke length (instead of the custom stroke length) to the stroke length value.
(Example) If the custom stroke length is 7 mm, apply the standard stroke length of 10 mm.

*2 : Due to heat resistance magnet production circumstances, the total length of ø16 type will be longer than that of ø20 type. Please be careful.

*3 : For dimensions of individual accessories, refer to pages 1108 to 1115.

Dimensions of rod end male thread

Code / Bore size (mm)	a'	c'	H	kk'	M	MM	T	wf
ø16	12	10	10	M6	6	8	3.6	3.5
ø20	14	12	13	M8	8	10	5	4.5
ø25	17.5	15	17	M10X1.25	10	12	6	5

Dimensions (ø32 to ø63)

● Rod end male thread

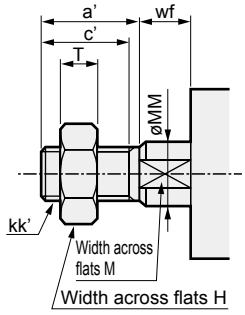

● SSD-T1L-32 to 63

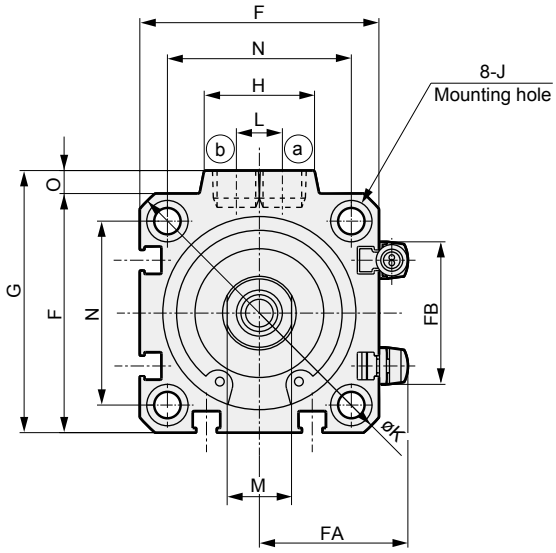

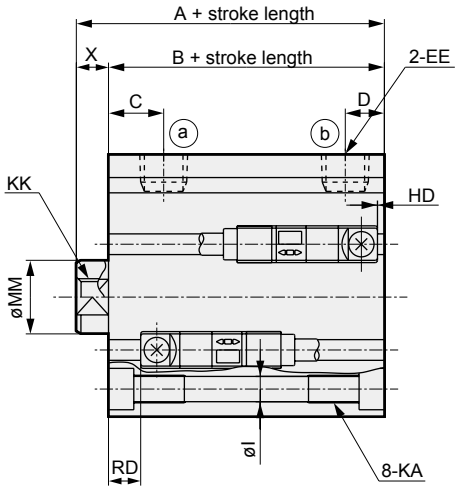

Code / Bore size	Basic dimensions A (*1)	B (*1)	C	D	EE	F	FA	FB	G	H	I	J	K	KA	KK
ø32	40	33	8	8	Rc1/8	45	28.8	24	49.5	24	5.5	Spot face 9 depth 5.5	60	M6 x depth 11	M8 x depth 13
ø40	46.5	39.5	12	8.5	Rc1/8	52	32.3	31	57	24	5.5	Spot face 9 depth 5.5	69	M6 x depth 11	M8 x depth 13
ø50	48.5	40.5	10.5	10.5	Rc1/4	64	38.3	32	71	33	6.9	Spot face 11 depth 6.5	86	M8 x depth 13	M10 x depth 15
ø63	54	46	13	11	Rc1/4	77	44.8	32	84	33	8.7	Spot face 14 depth 9	103	M10 x depth 25	M10 x depth 15

Code / Bore size	Basic dimensions L	M	MM	N	O	X	Dimensions with switch reed ET0H/ET0V HD	RD
ø32	10	14	16	34	4.5	7	0.5	2.0
ø40	10	14	16	40	5	7	1.5	7.0
ø50	15	17	20	50	7	8	1.5	6.0
ø63	15	17	20	60	7	8	5.5	5.5

*1:To calculate A+ stroke length or B+ stroke length when using custom stroke length, apply the next longer standard stroke length (instead of the custom stroke length) to the stroke length value.
(Example) If the custom stroke length is 7 mm, apply the standard stroke length of 10 mm.

Dimensions of rod end male thread

Code / Bore size (mm)	a'	c'	H	kk'	M	MM	T	wf
ø32	23.5	20.5	22	M14X1.5	14	16	8	5
ø40	23.5	20.5	22	M14X1.5	14	16	8	5
ø50	28.5	26	27	M18X1.5	17	20	11	5
ø63	28.5	26	27	M18X1.5	17	20	11	5

For dimensions of individual accessories, refer to pages 1108 to 1115.

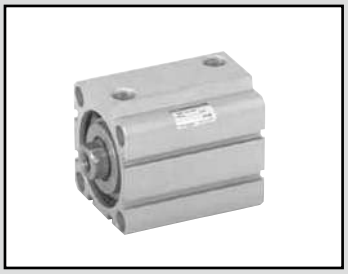

Compact cylinder high load/rubber-air cushioned

SSD-K-*C Series

● Bore size: ø20/ø25/ø32/ø40/ø50/ø63/ø80/ø100

JIS symbol

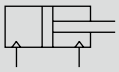

RoHS CAD

Specifications

Item	SSD-K-*C, SSD-KL-*C (with switch)							
Bore size mm	ø20	ø25	ø32	ø40	ø50	ø63	ø80	ø100
Actuation	Double acting							
Working fluid	Compressed air							
Max. working pressure MPa	1.0 (≈150 psi, 10 bar)							
Min. working pressure MPa	0.25 (≈36 psi, 2.5 bar)		0.2 (≈29 psi, 2 bar)					
Proof pressure MPa	1.6 (≈230 psi, 16 bar)							
Ambient temperature °C	-10 (14°F) to 60 (140°F) (no freezing)							
Port size	Rc 1/8				Rc 1/4		Rc 3/8	
Stroke tolerance mm	+2.0 0							
Working piston speed mm/s	50 to 500					50 to 300		
Cushion	Rubber-air cushion							
Lubrication	Not required (use turbine oil ISO VG32 if necessary for lubrication)							
Allowable absorbed energy J	0.16	0.16	0.40	0.63	0.98	1.56	2.51	3.92

Stroke length

Bore size (mm)	Standard stroke length (mm)	Max. stroke length (mm)	Min. stroke length (mm)
ø20	5, 10, 15, 20, 25, 30, 40, 50	200	5 mm(ø20 to ø50) 10 mm(ø63 to ø100)
ø25	10, 15, 20, 25, 30, 40, 50, 60, 70, 80, 90, 100	300	
ø32			
ø40			
ø50			
ø63	10, 20, 30, 40, 50, 60, 70, 80, 90, 100		
ø80			
ø100			

*1 : The custom stroke length is available in 1 mm increments. However, the total length is the same as that of the next longer standard stroke length.
*2 : When using the type with switch, refer to the table below.
*3 : Refer to pages 1320 and 1321 for the min. stroke length with mounting brackets LB and LB2.

Number of installed switches and min. stroke length (mm)

Switch quantity	1	2	3	4	5
Switch model No. / Bore size (mm)	T*	T*	T*	T*	T*
ø20	5	5	35	50	65
ø25	5	5	35	50	65
ø32	5	5	35	50	65
ø40	5	5	35	50	65
ø50	5	5	35	50	65
ø63	10	10	35	50	65
ø80	10	10	35	50	65
ø100	10	10	35	50	65

1: Less than 10 mm is not available for 2-color display, off-delay, strong magnetic field proof, or with T1 or T8* switch.

Rubber-air cushion mechanism

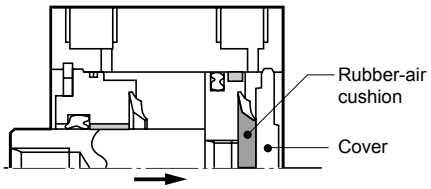

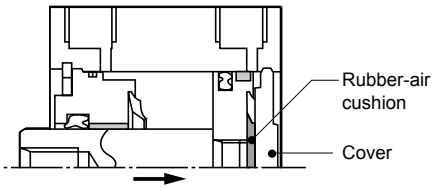

Cylinder with rubber cushion
Cylinder with rubber-air cushion

Data of the reduction of collision noise level (an example case)

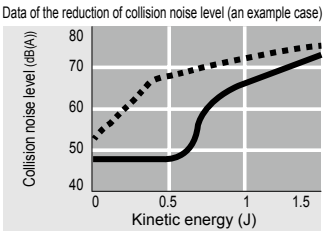

Data of the reduction of collision acceleration level (an example case)

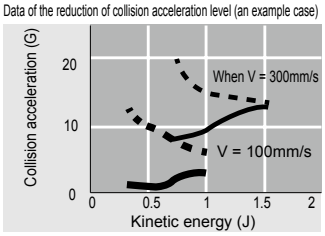

When pulled

An airtight space is created in the ■ area when the piston operates and the rubber-air cushion and cover make contact. Air in the airtight area is further compressed, absorbing energy as the piston operates. At the end of the stroke, energy generated by compression distortion of the rubber cushion is also added.

Switch specifications

● 1-color/2-color display/for AC magnetic field proof

Item	Proximity 2-wire				Proximity 3-wire				Reed 2-wire							Proximity 2-wire
	T1H/ T1V	T2H/T2V/ T2JH/T2JV	T2YH/ T2YV	T2WH/ T2WV	T3H/ T3V	T3PH/ T3PV	T3YH/ T3YV	T3WH/ T3WV	T0H/T0V		T5H/T5V		T8H/T8V			T2YD (*4) T2YDT
Applications	Programming controller relay, compact solenoid valve	Dedicated for programmable controller			For programmable controller, relay				For programmable controller, relay		For programmable controller, relay (no lamp), serial		For programmable controller, relay			Dedicated for programmable controller
Output method	-				NPN output	PNP output	NPN output	NPN output	-							
Pwr. supp. V.	-				10 to 28 VDC				-							
Load voltage	85 to 265 VAC	10 to 30 VDC		24 VDC ±10%	30 VDC or less				12/24 VDC	100/110 VAC	5/12/24 VDC	100/110 VAC	12/24 VDC	110 VAC	220 VAC	24 VDC ±10%
Load current	5 to 100 mA	5 to 20 mA (*3)			100 mA or less		50 mA or less		5 to 50 mA	7 to 20 mA	50 mA or less	20 mA or less	5 to 50 mA	7 to 20 mA	7 to 10 mA	5 to 20 mA
Indicator lamp	LED (Lit when ON)	LED (Lit when ON)	Red/green LED (Lit when ON)	Red/green LED (Lit when ON)	LED (Lit when ON)	Yellow LED (Lit when ON)	Red/green LED (Lit when ON)	Red/green LED (Lit when ON)	LED (Lit when ON)		Without indicator lamp		LED (Lit when ON)			Red/green LED (Lit when ON)
Leakage current	≤ 1 mA at 100 VAC, ≤ 2 mA at 200 VAC	1 mA or less			10 μA or less				0 mA							1 mA or less
Weight g	1 m:33 3 m:87 5 m:142	1 m:18 3 m:49 5 m:80	1 m:33 3 m:87 5 m:142	1 m:18 3 m:49 5 m:80	1 m:18 3 m:49 5 m:80		1 m:33 3 m:87 5 m:142	1 m:18 3 m:49 5 m:80	1 m:18 3 m:49 5 m:80				1 m:33 3 m:87 5 m:142			1 m:61 3 m:166 5 m:272

*1 : Refer to Ending Page 1 for detailed switch specifications and dimensions.
*2 : Switches other than the above models, such as switches with connectors, are also available. Refer to Ending Page 1.
*3 : The max. load current is 20 mA at 25°C. The current is lower than 20 mA if the operating ambient temperature around the switch is higher than 25°C. (5 to 10 mA at 60°C)
*4 : Switch for AC magnetic field (T2YD/T2YDT) cannot be used in DC magnetic field.

Theoretical thrust table

(Unit: N)

Bore size (mm)	Operating direction	Working pressure MPa 0.2	0.3	0.4	0.5	0.6	0.7	0.8	0.9	1.0
ø20	Push	-	94.2	1.26×10^2	1.57×10^2	1.88×10^2	2.20×10^2	2.51×10^2	2.83×10^2	3.14×10^2
	Pull	-	70.7	94.2	1.18×10^2	1.41×10^2	1.65×10^2	1.88×10^2	2.12×10^2	2.36×10^2
ø25	Push	-	1.47×10^2	1.96×10^2	2.45×10^2	2.95×10^2	3.44×10^2	3.93×10^2	4.42×10^2	4.91×10^2
	Pull	-	1.13×10^2	1.51×10^2	1.89×10^2	2.27×10^2	2.64×10^2	3.02×10^2	3.40×10^2	3.78×10^2
ø32	Push	1.61×10^2	2.41×10^2	3.22×10^2	4.02×10^2	4.83×10^2	5.63×10^2	6.43×10^2	7.24×10^2	8.04×10^2
	Pull	1.21×10^2	1.81×10^2	2.41×10^2	3.02×10^2	3.62×10^2	4.22×10^2	4.83×10^2	5.43×10^2	6.03×10^2
ø40	Push	2.51×10^2	3.77×10^2	5.03×10^2	6.28×10^2	7.54×10^2	8.80×10^2	1.01×10^3	1.13×10^3	1.26×10^3
	Pull	2.11×10^2	3.17×10^2	4.22×10^2	5.28×10^2	6.33×10^2	7.39×10^2	8.44×10^2	9.50×10^2	1.06×10^3
ø50	Push	3.93×10^2	5.89×10^2	7.85×10^2	9.82×10^2	1.18×10^3	1.37×10^3	1.57×10^3	1.77×10^3	1.96×10^3
	Pull	3.30×10^2	4.95×10^2	6.60×10^2	8.25×10^2	9.90×10^2	1.15×10^3	1.32×10^3	1.48×10^3	1.65×10^3
ø63	Push	6.23×10^2	9.35×10^2	1.25×10^3	1.56×10^3	1.87×10^3	2.18×10^3	2.49×10^3	2.81×10^3	3.12×10^3
	Pull	5.61×10^2	8.41×10^2	1.12×10^3	1.40×10^3	1.68×10^3	1.96×10^3	2.24×10^3	2.52×10^3	2.80×10^3
ø80	Push	1.01×10^3	1.51×10^3	2.01×10^3	2.51×10^3	3.02×10^3	3.52×10^3	4.02×10^3	4.52×10^3	5.03×10^3
	Pull	9.07×10^2	1.36×10^3	1.81×10^3	2.27×10^3	2.72×10^3	3.17×10^3	3.63×10^3	4.08×10^3	4.54×10^3
ø100	Push	1.57×10^3	2.36×10^3	3.14×10^3	3.93×10^3	4.71×10^3	5.50×10^3	6.28×10^3	7.07×10^3	7.85×10^3
	Pull	1.43×10^3	2.14×10^3	2.86×10^3	3.57×10^3	4.29×10^3	5.00×10^3	5.72×10^3	6.43×10^3	7.15×10^3

How to order

Without switch (without magnet for switch)

SSD-K — 40 ( ) C - 10 ———— N - LB - I

With switch (built-in magnet for switch)

SSD-KL - 40 ( ) C - 10 - T0H - R - N - LB - I

Ⓐ Bore size

Rubber-air cushioned

Ⓑ Port thread

Ⓒ Stroke length

Ⓓ Switch model No. *1 *8

Ⓔ Switch quantity

Ⓕ Option *2

Ⓖ Mounting bracket *3 *4

Ⓗ Accessory *5

Code	Description
Ⓐ Bore size (mm)	
20	ø20
25	ø25
32	ø32
40	ø40
50	ø50
63	ø63
80	ø80
100	ø100
Ⓑ Port thread	
Blank	Rc thread
N	NPT thread (ø32 and over) (made-to-order product)
G	G thread (ø32 and over) (made-to-order product)
Ⓒ Stroke length (mm)	
Refer to the stroke length table on the following page.	

Ⓓ Switch model No.

Axial lead wire	Radial lead wire	Contact	Voltage AC	Voltage DC	Display	Lead Line
TOH*	T0V*	Reed	●	●	1-color display	2-wire
T5H*	T5V*	Reed	●	●	Without indicator lamp	2-wire
T8H*	T8V*	Reed	●	●	1-color display	2-wire
T1H*	T1V*	Proximity	●		1-color display	2-wire
T2H*	T2V*	Proximity		●	1-color display	2-wire
T3H*	T3V*	Proximity		●	1-color display	3-wire
T3PH*	T3PV*	Proximity		●	1-color display	3-wire
T2WH*	T2WV*	Proximity		●	2-color display	2-wire
T2YH*	T2YV*	Proximity		●	2-color display	2-wire
T3WH*	T3WV*	Proximity		●	2-color display	3-wire
T3YH*	T3YV*	Proximity		●	2-color display	3-wire
T2JH*	T2JV*	Proximity		●	1-color display off-delay	2-wire
T2YD*	-	Proximity		●	2-color display AC magnetic field	2-wire
T2YDT*	-	Proximity		●	2-color display AC magnetic field	2-wire
T2HR3	T2VR3	Proximity		●	1-color display (bend resist lead wire specs)	2-wire

* Lead wire length	
Blank	1 m (standard)
3	3 m (option)
5	5 m (option)

Ⓔ Switch quantity	
R	1 on rod side
H	1 on head side
D	2

Ⓕ Option	
Blank	Rod end female thread
N	Rod end male thread
M	Piston rod material (stainless steel)

Ⓖ Mounting bracket	
LB	Axial foot
LB2	Axial foot (compact)
CB	Clevis bracket (pin and snap ring included)
CB2	Clevis bracket (compact) (pin and snap ring included)
FA	Rod side flange
FB	Head side flange

Ⓗ Accessory (available when rod end male thread "N" is selected)	
I	Rod eye
I2	Rod eye (compact)
Y	Rod clevis (pin and snap ring included)
Y2	Rod clevis (compact) (pin and snap ring included)

⚠ Precautions for model No. selection

*1 : Switches other than Ⓓ Switch model No. are also available. (Made to order) Refer to Ending Page 1 for details.

*2 : Piston rod of ø20 and ø25 is stainless steel as standard. C type snap ring is stainless steel instead of steel. The rod end male thread nut is stainless steel.

*3 : The mounting bracket is included at shipment.

*4 : The projection dimension of piston rod WF when LB2 or FA is selected is different from that of the standard. Refer to the dimensions on pages 1109 and 1110. The number of the specified protruding dimension will be added at the end of the model No. printed on the metal plate on the body.

*5 : "I" and "Y" cannot be selected together.

*6 : Refer to Ending Page 85 for custom specifications of rod end form.

*7 : Refer to pages 1088 and 1089 for combinations of variations/options.

*8 : Switches are shipped with the product. Contact CKD if assembling before shipment is necessary.

[Example of model No.]

SSD-KL-32C-10-T0H-R-N

Model: Compact cylinder, rubber-air cushioned

Ⓐ Bore size : ø32 mm
Ⓑ Port thread : Rc thread
Ⓒ Stroke length : 10 mm
Ⓓ Switch model No. : Reed switch T0H, lead wire length 1 m
Ⓔ Switch quantity : 1 on rod side
Ⓕ Option : Rod end male thread

How to order mounting bracket

Bore size (mm) / Mounting bracket	ø20	ø25	ø32	ø40	ø50	ø63	ø80	ø100
Foot (LB)	SSD-LB-20	SSD-LB-25	SSD-LB-32	SSD-LB-40	SSD-LB-50	SSD-LB-63	SSD-LB-80	SSD-LB-100
Foot (LB2)	SSD-LB2-20	SSD-LB2-25	SSD-LB2-32	SSD-LB2-40	SSD-LB2-50	SSD-LB2-63	SSD-LB2-80	SSD-LB2-100
Flange (FA/FB)	SSD-FA-20	SSD-FA-25	SSD-FA-32	SSD-FA-40	SSD-FA-50	SSD-FA-63	SSD-FA-80	SSD-FA-100
Clevis bracket (CB)	SSD-CB-20	SSD-CB-25	SSD-CB-32	SSD-CB-40	SSD-CB-50	SSD-CB-63	SSD-CB-80	SSD-CB-100
Clevis bracket (CB2)	SSD-CB2-20	SSD-CB2-25	SSD-CB2-32	SSD-CB2-40	SSD-CB2-50	SSD-CB2-63	SSD-CB2-80	SSD-CB2-100

*1: The foot mounting bracket is provided as 2 pcs./set.

[Stroke length table]

Stroke length (mm)		Applicable bore size							
		ø20	ø25	ø32	ø40	ø50	ø63	ø80	ø100
Standard stroke length	5	●							
	10	●	●	●	●	●	●	●	●
	15	●	●	●	●	●			
	20	●	●	●	●	●	●	●	●
	25	●	●	●	●	●			
	30	●	●	●	●	●	●	●	●
	40	●	●	●	●	●	●	●	●
	50	●	●	●	●	●	●	●	●
	60			●	●	●	●	●	●
	70			●	●	●	●	●	●
	80			●	●	●	●	●	●
	90			●	●	●	●	●	●
	100			●	●	●	●	●	●
Min. stroke length (mm) *1		5					10		
Max. stroke length (mm)		200	300						
Custom stroke length *2		In 1 mm increments							

1 : Less than 10 mm with the 2-color display, off-delay, AC magnetic field proof, T1 or T8* switch is not available.
Refer to page 1150 for the number of installed switches and the min. stroke length.
*2 : The total length is the same as that of the next longer standard stroke length.
*3 : Refer to pages 1320 and 1321 for the min. stroke length with mounting brackets LB and LB2.

How to order switch

SW - T0H

(Item Ⓓ on page 1152)

Cylinder weight table (the weight of the switches is when there are 2 cylinder switches.)

(Unit: g)

Stroke length (mm)	5		10		15		20		25		30		40		50		60		70		80		90		100	
Bore size (mm)	No switch	Switch	No switch	Switch	No switch	Switch	No switch	Switch	No switch	Switch	No switch	Switch	No switch	Switch	No switch	Switch	No switch	Switch	No switch	Switch	No switch	Switch	No switch	Switch	No switch	Switch
ø20	75	150	88	163	101	176	113	188	126	201	138	213	163	238	188	263	213	288	238	313	263	338	288	363	313	388
ø25	—	—	118	209	134	225	150	241	165	256	182	273	214	305	246	337	278	369	310	401	342	433	374	465	406	497
ø32	—	—	188	302	209	323	231	345	253	367	275	389	318	432	361	475	404	518	447	561	490	604	533	647	576	690
ø40	—	—	263	406	290	433	316	459	342	485	369	512	422	565	475	618	528	671	581	724	634	777	687	830	740	883
ø50	—	—	425	619	467	661	510	704	553	747	594	788	678	872	762	956	846	1040	930	1124	1014	1208	1098	1292	1182	1376
ø63	—	—	617	896	—	—	727	1006	—	—	838	1117	948	1227	1058	1337	1168	1447	1278	1557	1388	1667	1498	1777	1608	1887
ø80	—	—	1101	1514	—	—	1274	1687	—	—	1448	1861	1621	2034	1794	2207	1967	2380	2140	2553	2313	2726	2486	2899	2659	3072
ø100	—	—	1660	2227	—	—	1888	2455	—	—	2115	2682	2343	2910	2571	3138	2799	3366	3027	3594	3255	3822	3483	4050	3711	4278

Stroke length (mm)	110		120		130		140		150		160		170		180		190		200	
Bore size (mm)	No switch	Switch	No switch	Switch	No switch	Switch	No switch	Switch	No switch	Switch	No switch	Switch	No switch	Switch	No switch	Switch	No switch	Switch	No switch	Switch
ø20	338	413	363	438	388	463	413	488	438	513	463	538	488	563	513	588	538	613	563	638
ø25	438	529	470	561	502	593	534	625	566	657	598	689	630	721	662	753	694	785	726	817
ø32	619	733	662	776	705	819	748	862	791	905	833	947	876	990	919	1033	962	1076	1005	1119
ø40	793	936	846	989	899	1042	952	1095	1005	1148	1058	1201	1111	1254	1164	1307	1217	1360	1270	1413
ø50	1266	1460	1350	1544	1434	1628	1518	1712	1602	1796	1700	1894	1785	1979	1870	2064	1955	2149	2040	2234
ø63	1718	1997	1828	2107	1938	2217	2048	2327	2158	2437	2268	2547	2378	2657	2488	2767	2598	2877	2708	2987
ø80	2832	3245	3005	3418	3178	3591	3351	3764	3524	3937	3697	4110	3870	4283	4043	4456	4216	4629	4389	4802
ø100	3939	4506	4167	4734	4395	4962	4623	5190	4851	5418	5079	5646	5307	5874	5535	6102	5763	6830	5991	6558

Stroke length (mm)	210		220		230		240		250		260		270		280		290		300	
Bore size (mm)	No switch	Switch	No switch	Switch	No switch	Switch	No switch	Switch	No switch	Switch	No switch	Switch	No switch	Switch	No switch	Switch	No switch	Switch	No switch	Switch
ø25	769	849	801	881	833	913	865	945	897	977	929	1009	961	1041	993	1073	1025	1105	1057	1137
ø32	1048	1162	1091	1205	1134	1248	1177	1291	1220	1334	1263	1377	1306	1420	1349	1463	1392	1506	1435	1549
ø40	1323	1466	1376	1519	1429	1572	1482	1625	1535	1678	1588	1731	1641	1784	1694	1837	1747	1890	1800	1943
ø50	2125	2319	2210	2404	2295	2489	2380	2574	2465	2659	2550	2744	2635	2829	2720	2914	2805	2999	2890	3084
ø63	2817	3096	2927	3206	3037	3316	3147	3426	3257	3536	3367	3646	3477	3756	3587	3866	3697	3976	3807	4086
ø80	4561	4974	4734	5147	4907	5320	5080	5493	5253	5666	5426	5839	5599	6012	5772	6185	5945	6358	6118	6531
ø100	6220	6787	6448	7015	6676	7243	6904	7471	7132	7699	7360	7927	7588	8155	7816	8383	8044	8611	8272	8839

Internal structure and parts list

● SSD-KL-20C, 25C
(double acting/single rod high load/rubber-air cushioned/with switch)

· ø20: Over 100 to 200 mm stroke length
· ø25: Over 150 to 300 mm stroke length

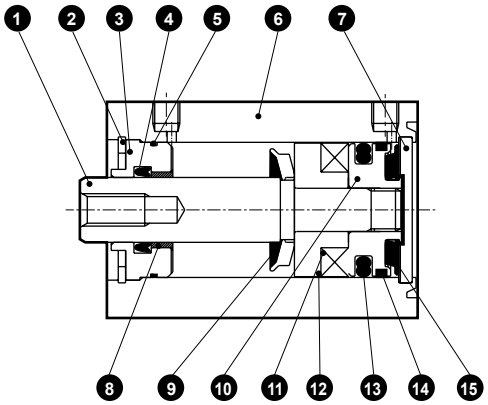

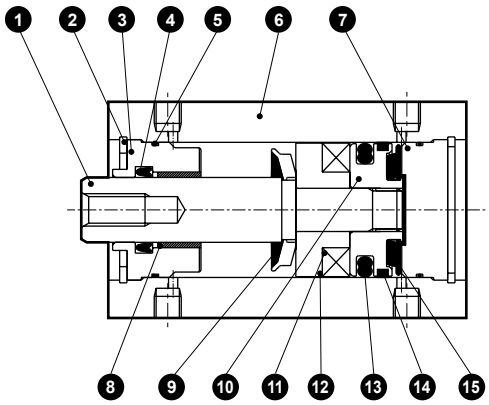

● SSD-K-20C, 25C
(double acting/single rod high load/rubber-air cushioned)

· ø20: Over 100 to 200 mm stroke length
· ø25: Over 150 to 300 mm stroke length

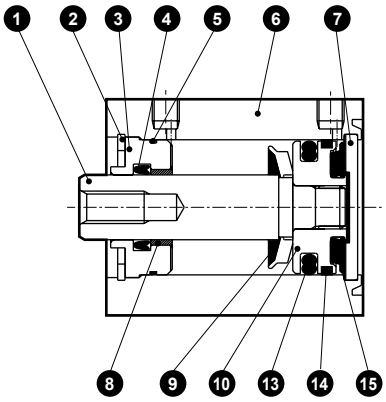

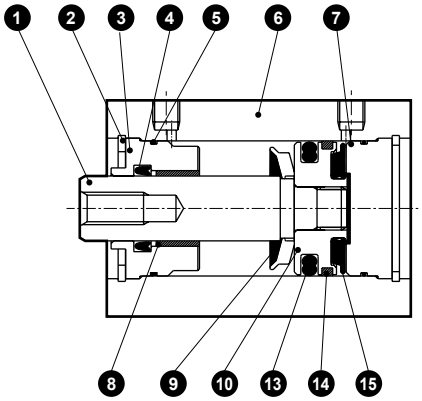

No.	Part name	Material	Remarks	No.	Part name	Material	Remarks
1	Piston rod	Steel	Industrial chrome plating	9	Rubber air cushion R	Special rubber	
2	C type snap ring	Steel	Zinc phosphate	10	Piston	Aluminum alloy	Alumite
3	Rod metal	Aluminum alloy	Alumite	11	Magnet	Plastic	
4	Rod packing	Nitrile rubber		12	Spacer	Aluminum alloy	Alumite
5	Rod metal gasket	Nitrile rubber		13	Piston packing	Nitrile rubber	
6	Body	Aluminum alloy	Hard alumite	14	Wear ring	Polyacetal resin	
7	Cover	Aluminum alloy		15	Rubber air cushion H	Special rubber	
8	Bush	Oiles drymet					

Repair parts list

Bore size (mm)	Kit No.	Repair parts No.
ø20	SSD-K-20CK	4 5 9
ø25	SSD-K-25CK	13 14 15

Dimensions

Same as SSD-K Series (double acting/high load).
Refer to pages 1122 to 1125.

Internal structure and parts list

● SSD-KL-32C to 100C
(double acting/single rod high load/rubber-air cushioned/ with switch)

· ø32 to ø50: Over 150 to 300 mm stroke length
· ø63 to ø100: Over 200 to 300 mm stroke length

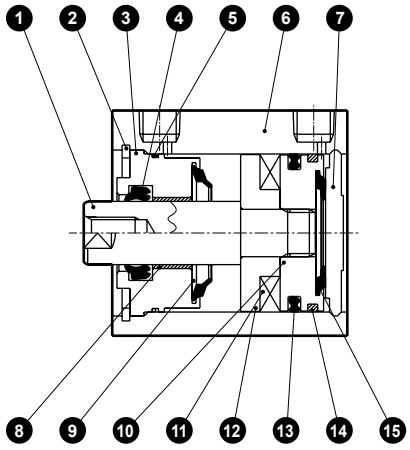

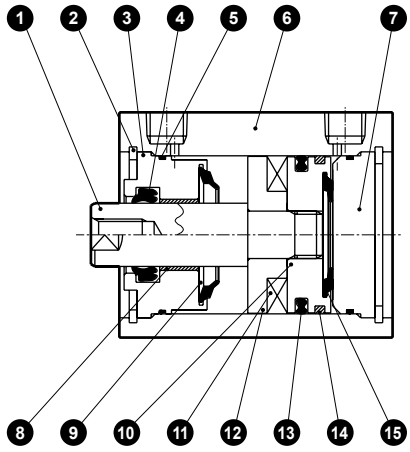

● SSD-K-32C to 100C
(double acting/single rod high high load/rubber-air cushioned)

· ø32 to ø50: Over 150 to 300 mm stroke length
· ø63 to ø100: Over 200 to 300 mm stroke length

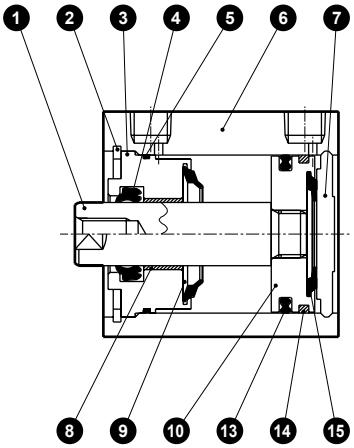

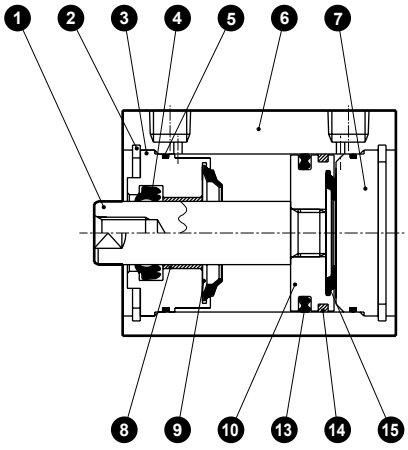

No.	Part name	Material	Remarks	No.	Part name	Material	Remarks
1	Piston rod	Steel	Industrial chrome plating	9	Rubber air cushion R	Special rubber	
2	C type snap ring	Steel	Zinc phosphate	10	Piston	Aluminum alloy	Alumite
3	Rod metal	Aluminum alloy	Alumite	11	Magnet	Plastic	
4	Rod packing	Nitrile rubber		12	Spacer	Aluminum alloy	Alumite
5	Rod metal gasket	Nitrile rubber		13	Piston packing	Nitrile rubber	
6	Body	Aluminum alloy	Hard alumite	14	Wear ring	Polyacetal resin	
7	Cover	Aluminum alloy	Alumite	15	Rubber air cushion H	Special rubber	
8	Bush	Oiles drymet					

Repair parts list

Bore size (mm)	Kit No.	Repair parts No.
ø32	SSD-K-32CK	4 5 9 13 14 15
ø40	SSD-K-40CK	
ø50	SSD-K-50CK	
ø63	SSD-K-63CK	
ø80	SSD-K-80CK	
ø100	SSD-K-100CK	

Technical data

[Comparison of collision noise level]

Standard rubber cushion:
Rubber-air cushion:

Values are comparison samples obtained under the conditions below.
As the values vary with base rigidity, etc., they are not guaranteed.

(Test conditions)
Cylinder : SSD
Mounting direction of cylinder : Vertical with rod upward
Cylinder supply pressure : 0.5 MPa
Measurement position of sound level meter : 1 m from sample

ø 20

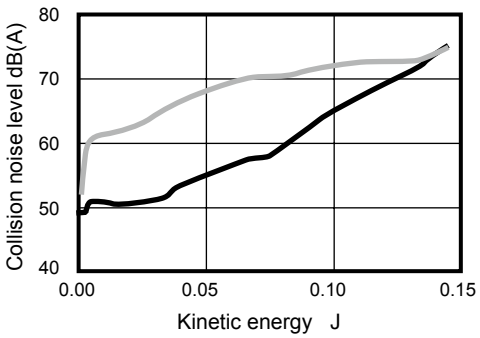

ø 25

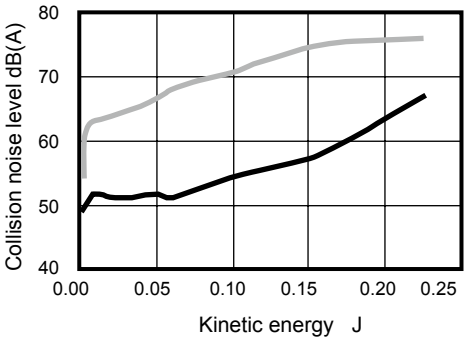

ø 32

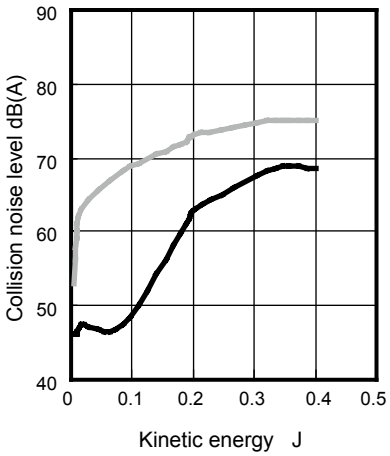

ø 40

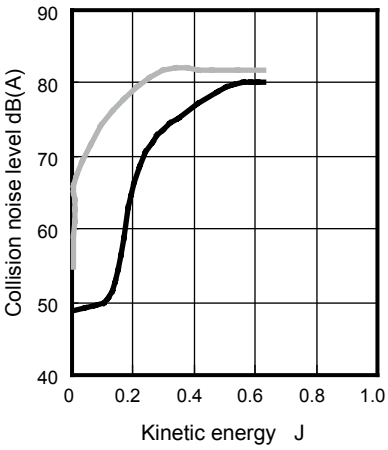

ø 50

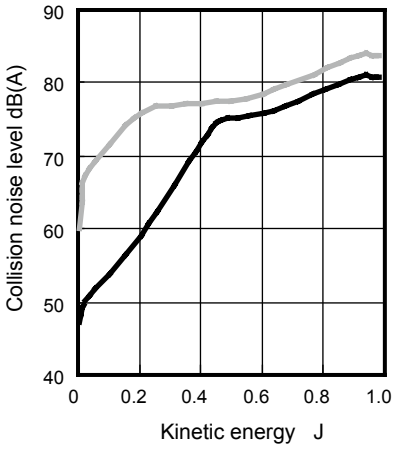

ø 63

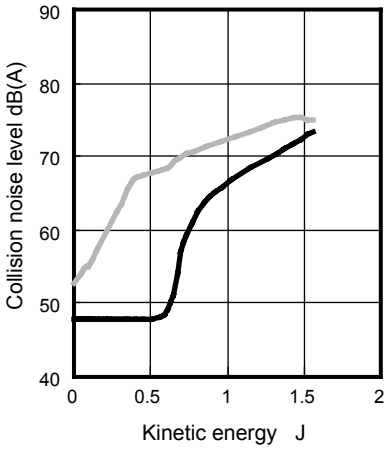

ø 80

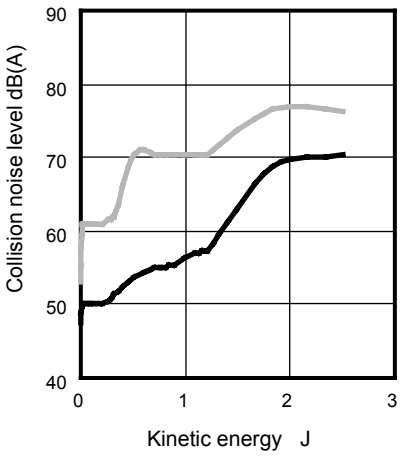

ø 100

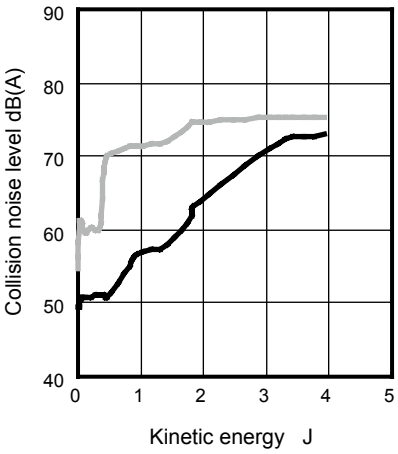

Technical data

[Comparison of collision acceleration]

Standard rubber cushion:
Rubber-air cushion:

ø 20

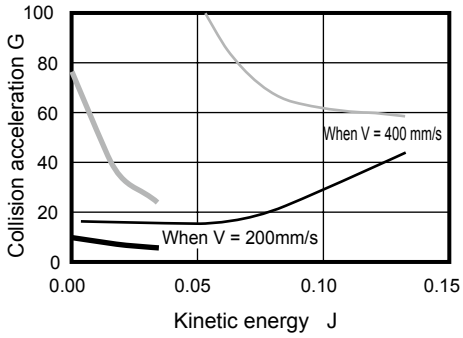

ø 25

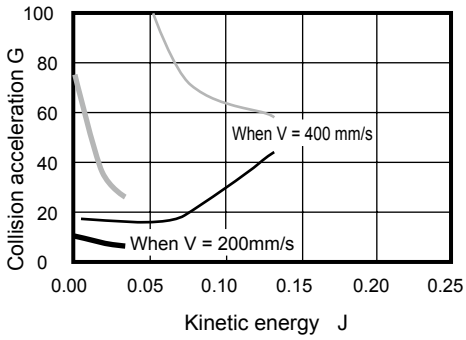

ø 32

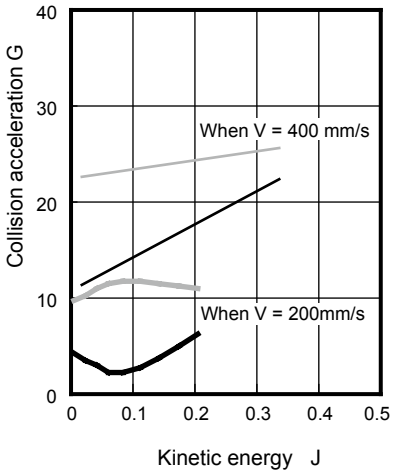

ø 40

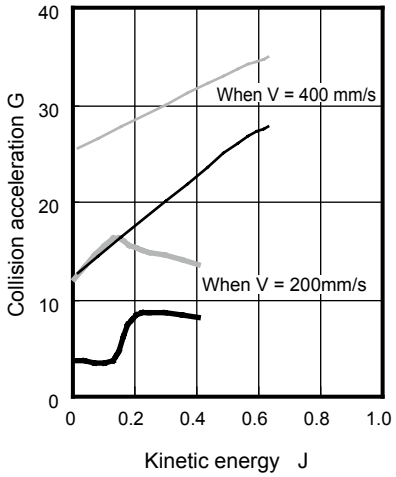

ø 50

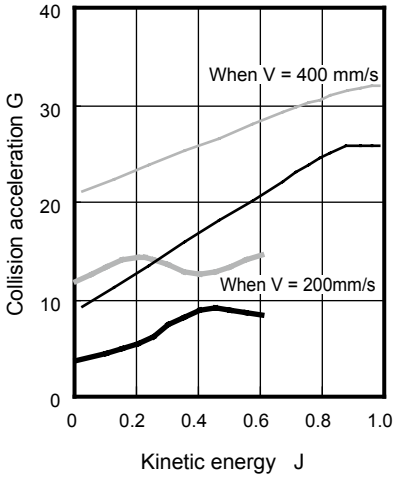

ø 63

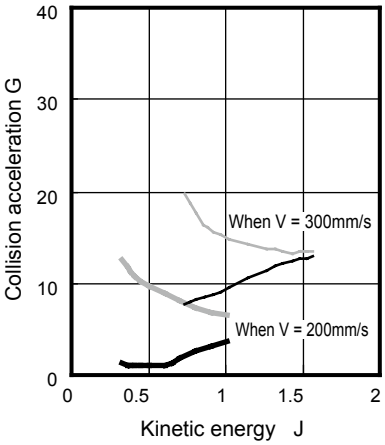

ø 80

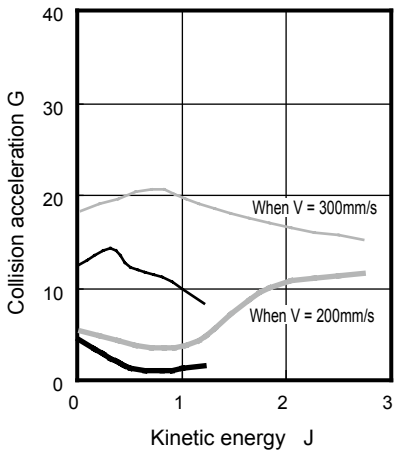

ø 100

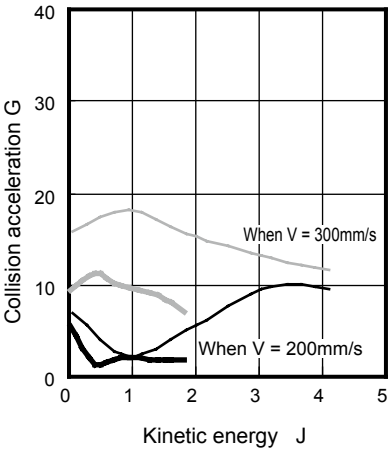

SCP*3
CMK2
CMA2
SCM
SCG
SCA2
SCS2
CKV2
CAV2/ COVP/N2
SSD2
SSG
SSD
CAT
MDC2
MVC
SMG
MSD/ MSDG
FC*
STK
SRL3
SRG3
SRM3
SRT3
MRL2
MRG2
SM-25
ShkAbs
FJ
FK
Spd Contr
Ending

[Allowable energy value]

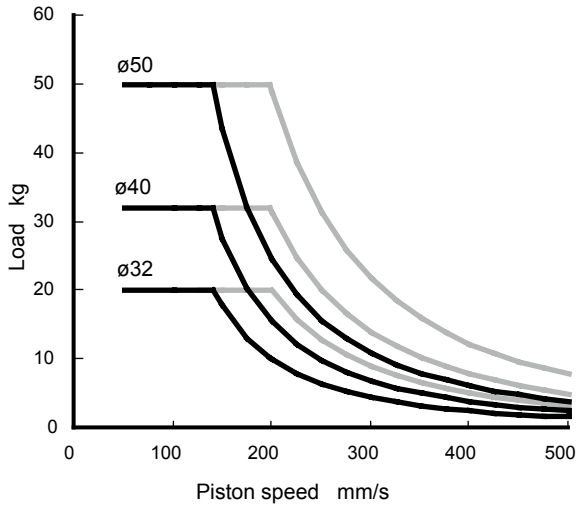

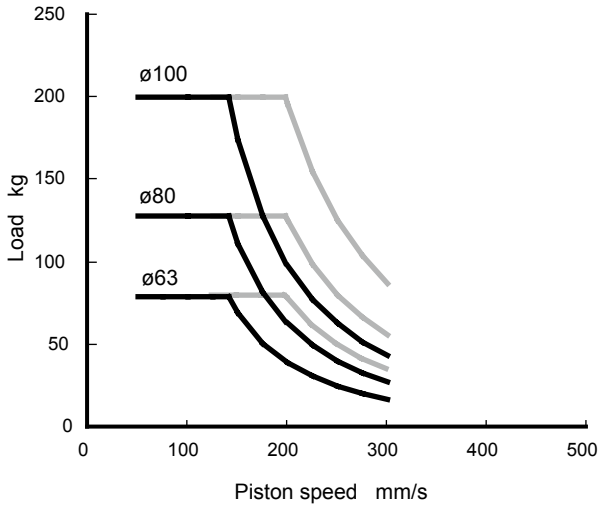

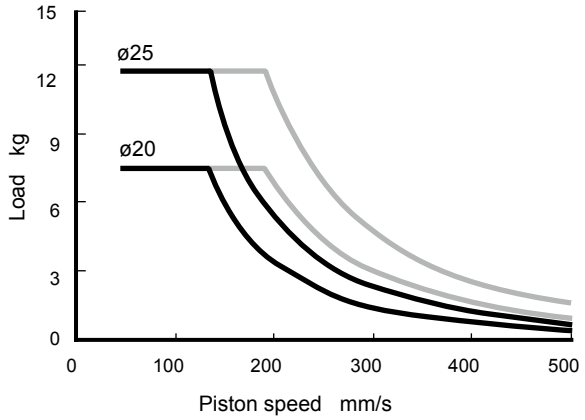

Usable in the range below and to the left of the curve.
Although it can also be used in the range marked with ——— in the figure, we recommend use within the range marked with a solid line to maximize the noise reduction effect.

MEMO

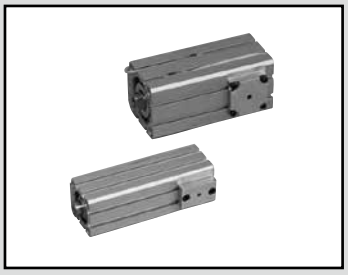

Compact cylinder double acting/with position locking

SSD-Q Series

● Bore size: ø16/ø20/ø25/ø32/ø40/ø50/ø63/ø80/ø100

JIS symbol

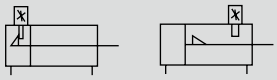

RoHS CAD

Specifications

Item	SSD-Q SSD-QL (with switch)								
Bore size mm	ø16	ø20	ø25	ø32	ø40	ø50	ø63	ø80	ø100
Actuation	Double acting/position locking								
Working fluid	Compressed air								
Max. working pressure MPa	1.0 (≈150 psi, 10 bar)								
Min. working pressure MPa	0.15 (≈22 psi, 1.5 bar)								
Proof pressure MPa	1.6 (≈230 psi, 16 bar)								
Ambient temperature °C	-10 (14°F) to 60 (140°F) (no freezing)								
Port size	M5			Rc1/8		Rc1/4		Rc3/8	
Stroke tolerance mm	$^{+2.5}_{0}$								
Working piston speed mm/s	50 to 500						50 to 300		
Cushion	Rubber cushion								
Lubrication	Not required (use turbine oil class 1 ISO VG32 if necessary for lubrication)								
Position locking mechanism	Head side or rod side								
Holding force N	Max. thrust x 0.7								
Allowable absorbed energy J	0.09	0.157	0.157	0.402	0.628	0.98	1.56	2.51	3.92

Stroke length

Bore size (mm)	Standard stroke length (mm)	Max. stroke length (mm)	Min. stroke length (mm)
ø16	5, 10, 15, 20	100 (*1)	5
ø20	25, 30, 40, 50	200 (*1)	
ø25	10, 15, 20, 25, 30 45, 50, 60, 70, 80 90, 100	300 (*1)	
ø32			
ø40			
ø50			
ø63	10, 20, 30, 40, 50 60, 70, 80, 90, 100		
ø80			
ø100			

*1) Dimensions of custom stroke length (example: 64 mm stroke length) are obtained by directly entering the value of custom stroke length (64). Available in 1mm increments.
*2) When using the type with switch, refer to the table at right.

Number of installed switches and min. stroke length (mm)

Switch quantity	1	2	3	4	5
Switch model No. / Bore size (mm)	T*	T*	T*	T*	T*
ø16	5	5	25	-	-
ø20	5	5	35	50	65
ø25	5	5	35	50	65
ø32	5	5	35	50	65
ø40	5	5	35	50	65
ø50	5	5	35	50	65
ø63	5	5	35	50	65
ø80	5	5	35	50	65
ø100	5	5	35	50	65

1: Less than 10 mm with the 2-color display, off-delay, AC magnetic field proof, T1 or T8* switch is not available.

Operational explanation

● When locked

When the piston ① of the cylinder moves toward the stroke end, the stopper piston ③ is pushed up along the slope of the sleeve ②.

When the cylinder piston comes to the stroke end and the sleeve groove Ⓐ reaches the stopper piston position, the stopper piston is pushed down by the spring ④ and fits into the groove, completing the lock action.

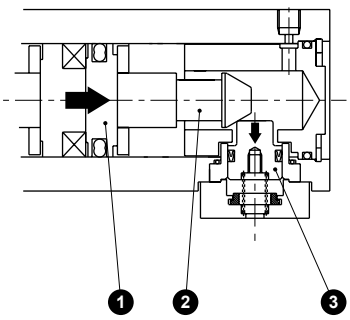

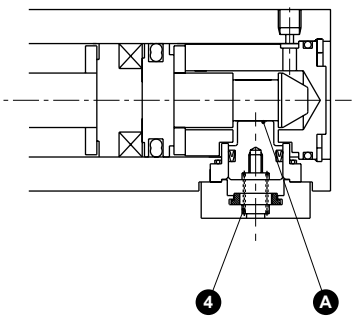

● Unlocking

When pressure is supplied to the port, the stopper piston pushes up the spring and slips out of the sleeve groove, releasing the lock.

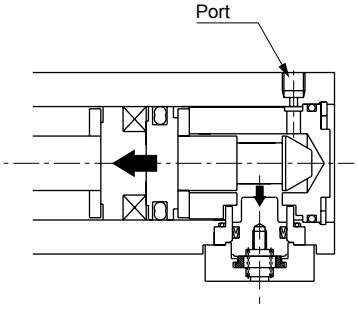

⚠ Be sure to read the Safety precautions for the Position locking on pages 1334 to 1338 before use.

Switch specifications

● 1-color/2-color display/for AC magnetic field proof

Item	Proximity 2-wire				Proximity 3-wire				Reed 2-wire							Proximity 2-wire
	T1H/ T1V	T2H/T2V/ T2JH/T2JV	T2YH/ T2YV	T2WH/ T2WV	T3H/ T3V	T3PH/ T3PV	T3YH/ T3YV	T3WH/ T3WV	T0H/T0V		T5H/T5V		T8H/T8V			T2YD (*4) T2YDT
Applications	For programmable controller, relay, compact solenoid valve	Dedicated for programmable controller			For programmable controller, relay				For programmable controller, relay		For programmable controller, relay (no lamp), serial		For programmable controller, relay			Dedicated for programmable controller
Output method	-				NPN output	PNP output	NPN output	NPN output	-							
Pwr. supp. V.	-				10 to 28 VDC				-							
Load voltage	85 to 265 VAC	10 to 30 VDC		24 VDC ±10%	30 VDC or less				12/24 VDC	100/110 VAC	5/12/24 VDC	100/110 VAC	12/24 VDC	110 VAC	220 VAC	24 VDC ±10%
Load current	5 to 100 mA	5 to 20 mA (*3)			100 mA or less		50 mA or less		5 to 50 mA	7 to 20 mA	50 mA or less	20 mA or less	5 to 50 mA	7 to 20 mA	7 to 10 mA	5 to 20 mA
Indicator lamp	LED (Lit when ON)	LED (Lit when ON)	Red/green LED (Lit when ON)	Red/green LED (Lit when ON)	LED (Lit when ON)	Yellow LED (Lit when ON)	Red/green LED (Lit when ON)	Red/green LED (Lit when ON)	LED (Lit when ON)		Without indicator lamp		LED (Lit when ON)			Red/green LED (Lit when ON)
Leakage current	≤1 mA at 100 VAC, ≤2 mA at 200 VAC	1 mA or less			10 μA or less				0 mA							1 mA or less
Weight g	1 m:33 3 m:87 5 m:142	1 m:18 3 m:49 5 m:80	1 m:33 3 m:87 5 m:142	1 m:18 3 m:49 5 m:80	1 m:18 3 m:49 5 m:80		1 m:33 3 m:87 5 m:142	1 m:18 3 m:49 5 m:80	1 m:18 3 m:49 5 m:80				1 m:33 3 m:87 5 m:142			1 m:61 3 m:166 5 m:272

*1 : Refer to Ending Page 1 for detailed switch specifications and dimensions.
*2: Switches other than the above models, such as switches with connectors, are also available. Refer to Ending Page 1.
*3 : The max. load current is 20 mA at 25°C. The current is lower than 20 mA if the operating ambient temperature around the switch is higher than 25˚C. (5 to 10 mA at 60°C)
*4 : Switch for AC magnetic field (T2YD/T2YDT) cannot be used in DC magnetic field.

Cylinder weight table

(the weight of the switches is when there are 2 cylinder switches.) (Unit: g)

Bore size (mm)	Product weight for 0 mm stroke length		St = Additional weight per 10 mm
	Without switch	With switch	
ø16	119	164	21
ø20	164	239	25
ø25	227	318	32
ø32	377	491	43
ø40	599	742	53
ø50	1197	1391	84
ø63	1703	1982	110
ø80	3651	4064	173
ø100	5291	5858	228

(Example) Product weight
SSD-QL-40-50-T0H-D-H
- Product weight for 0 mm stroke length... 742 g
- Additional weight for stroke length 50 mm ... 53 x 5 = 265 g
- Product weight.....742 + 265 = 1007 g

Theoretical thrust table

(Unit: N)

Bore size (mm)	Operating direction	Working pressure MPa									
		0.15	0.2	0.3	0.4	0.5	0.6	0.7	0.8	0.9	1.0
ø16	Push	30.2	40.2	60.3	80.4	1.01×10^2	1.21×10^2	1.41×10^2	1.61×10^2	1.81×10^2	2.01×10^2
	Pull	22.6	30.2	45.2	60.3	75.4	90.5	1.06×10^2	1.21×10^2	1.36×10^2	1.51×10^2
ø20	Push	47.1	62.8	94.2	1.26×10^2	1.57×10^2	1.88×10^2	2.20×10^2	2.51×10^2	2.83×10^2	3.14×10^2
	Pull	35.3	47.1	70.7	94.2	1.18×10^2	1.41×10^2	1.65×10^2	1.88×10^2	2.12×10^2	2.36×10^2
ø25	Push	73.6	98.2	1.47×10^2	1.96×10^2	2.45×10^2	2.95×10^2	3.44×10^2	3.93×10^2	4.42×10^2	4.91×10^2
	Pull	56.7	75.6	1.13×10^2	1.51×10^2	1.89×10^2	2.27×10^2	2.64×10^2	3.02×10^2	3.40×10^2	3.78×10^2
ø32	Push	1.21×10^2	1.61×10^2	2.41×10^2	3.22×10^2	4.02×10^2	4.83×10^2	5.63×10^2	6.43×10^2	7.24×10^2	8.04×10^2
	Pull	90.5	1.21×10^2	1.81×10^2	2.41×10^2	3.02×10^2	3.62×10^2	4.22×10^2	4.83×10^2	5.43×10^2	6.03×10^2
ø40	Push	1.88×10^2	2.51×10^2	3.77×10^2	5.03×10^2	6.28×10^2	7.54×10^2	8.80×10^2	1.01×10^3	1.13×10^3	1.26×10^3
	Pull	1.58×10^2	2.11×10^2	3.17×10^2	4.22×10^2	5.28×10^2	6.33×10^2	7.39×10^2	8.44×10^2	9.50×10^2	1.06×10^3
ø50	Push	2.95×10^2	3.93×10^2	5.89×10^2	7.85×10^2	9.82×10^2	1.18×10^3	1.37×10^3	1.57×10^3	1.77×10^3	1.96×10^3
	Pull	2.47×10^2	3.30×10^2	4.95×10^2	6.60×10^2	8.25×10^2	9.90×10^2	1.15×10^3	1.32×10^3	1.48×10^3	1.65×10^3
ø63	Push	4.68×10^2	6.23×10^2	9.35×10^2	1.25×10^3	1.56×10^3	1.87×10^3	2.18×10^3	2.49×10^3	2.81×10^3	3.12×10^3
	Pull	4.20×10^2	5.61×10^2	8.41×10^2	1.12×10^3	1.40×10^3	1.68×10^3	1.96×10^3	2.24×10^3	2.52×10^3	2.80×10^3
ø80	Push	7.54×10^2	1.01×10^3	1.51×10^3	2.01×10^3	2.51×10^3	3.02×10^3	3.52×10^3	4.02×10^3	4.52×10^3	5.03×10^3
	Pull	6.80×10^2	9.07×10^2	1.36×10^3	1.81×10^3	2.27×10^3	2.72×10^3	3.17×10^3	3.63×10^3	4.08×10^3	4.54×10^3
ø100	Push	1.18×10^3	1.57×10^3	2.36×10^3	3.14×10^3	3.93×10^3	4.71×10^3	5.50×10^3	6.28×10^3	7.07×10^3	7.85×10^3
	Pull	1.07×10^3	1.43×10^3	2.14×10^3	2.86×10^3	3.57×10^3	4.29×10^3	5.00×10^3	5.72×10^3	6.43×10^3	7.15×10^3

How to order

● Without switch (without magnet for switch)

SSD-Q - 16 ( ) - 5 - R ——— N - LB - I

● With switch (built-in magnet for switch)

SSD-QL - 16 ( ) - 5 - R - T0H - R - N - LB - I

Ⓐ Bore size

Ⓑ Port thread

Ⓒ Stroke length

Ⓓ Position locking mechanism

Ⓔ Switch model No. *1 *7

Ⓕ Switch quantity

Ⓖ Option

Ⓗ Mounting bracket *2 *3

Ⓘ Accessory *4

Code	Description
Ⓐ Bore size (mm)	
16	ø16
20	ø20
25	ø25
32	ø32
40	ø40
50	ø50
63	ø63
80	ø80
100	ø100

Ⓑ Port thread	
Blank	Rc thread
NN	NPT thread (ø32 and over) (made-to-order product)
GN	G thread (ø32 and over) (made-to-order product)

Ⓒ Stroke length (mm)
Refer to the stroke length table on the following page.

Ⓓ Position locking mechanism	
R	With rod side position locking
H	With head side position locking

Ⓔ Switch model No.

Axial lead wire	Radial lead wire	Contact	Voltage AC	Voltage DC	Display	Lead wire
T0H*	**T0V***	Reed	●	●	1-color display	2-wire
T5H*	**T5V***	Reed	●	●	Without indicator lamp	2-wire
T8H*	**T8V***	Reed	●	●	1-color display	2-wire
T1H*	**T1V***	Proximity	●		1-color display	2-wire
T2H*	**T2V***	Proximity		●	1-color display	2-wire
T3H*	**T3V***	Proximity		●	1-color display	3-wire
T3PH*	**T3PV***	Proximity		●	1-color display	3-wire
T2WH*	**T2WV***	Proximity		●	2-color display	2-wire
T2YH*	**T2YV***	Proximity		●	2-color display	2-wire
T3WH*	**T3WV***	Proximity		●	2-color display	3-wire
T3YH*	**T3YV***	Proximity		●	2-color display	3-wire
T2JH*	**T2JV***	Proximity		●	1-color display off-delay	2-wire
T2YD*	**-**	Proximity		●	2-color display AC magnetic field	2-wire
T2YDT*	**-**	Proximity		●	2-color display AC magnetic field	2-wire
T2HR3	**T2VR3**	Proximity		●	1-color display (bend resist lead wire specs)	2-wire

*** Lead wire length**	
Blank	1 m (standard)
3	3 m (option)
5	5 m (option)

Ⓕ Switch quantity	
R	1 on rod side
H	1 on head side
D	2

Ⓖ Option	
Blank	Rod end female thread
N	Rod end male thread

Ⓗ Mounting bracket	
LB	Axial foot
LB2	Axial foot (compact)
CB	Clevis bracket (pin and snap ring included)
CB2	Clevis bracket (compact) (pin and snap ring included)
FA	Rod side flange
FB	Head side flange

Ⓘ Accessory (available when rod end male thread "N" is selected)	
I	Rod eye
I2	Rod eye (compact)
Y	Rod clevis (pin and snap ring included)
Y2	Rod clevis (compact) (pin and snap ring included)

⚠ Precautions for model No. selection

1 : AC magnetic field proof switch and T8 switch cannot be installed on ø16.
*2 : The mounting bracket is included at shipment.
*3 : The projection dimension of piston rod WF when LB2 or FA is selected is different from that of the standard. Refer to the dimensions on pages 1109 and 1110. The number of the specified protruding dimension will be added at the end of the model No. printed on the metal plate on the body.
*4 : "I" and "Y" cannot be selected together.
*5 : Refer to Ending Page 85 for custom specifications of rod end form.
*6 : Refer to pages 1086 and 1087 for combinations of variations/options.
*7 : Switches are shipped with the product. Contact CKD if assembling before shipment is necessary.

[Example of model No.]

SSD-QL-16-5-R-T0H-R-N

Model: Compact cylinder, position locking

Ⓐ Bore size	: ø16 mm
Ⓑ Port thread	: Rc thread
Ⓒ Stroke length	: 5 mm
Ⓓ Position locking mechanism	: With rod side position locking
Ⓔ Switch model No.	: Reed switch T0H, lead wire 1 m
Ⓕ Switch quantity	: 1 on rod side
Ⓖ Option	: Rod end male thread

How to order switch

SW - T0H

Switch model No. (Item Ⓔ above)

[Stroke length table]

Stroke length (mm)		Applicable bore size								
		ø16	ø20	ø25	ø32	ø40	ø50	ø63	ø80	ø100
Standard stroke length	5	●	●							
	10	●	●	●	●	●	●	●	●	●
	15	●	●	●	●	●	●			
	20	●	●	●	●	●	●	●	●	●
	25	●	●	●	●	●	●			
	30	●	●	●	●	●	●	●	●	●
	40	●	●	●	●	●	●	●	●	●
	50	●	●	●	●	●	●	●	●	●
	60			●	●	●	●	●	●	●
	70			●	●	●	●	●	●	●
	80			●	●	●	●	●	●	●
	90			●	●	●	●	●	●	●
	100			●	●	●	●	●	●	●
Min. stroke length (mm) *1		5								
Max. stroke length (mm)		100	200	300						
Custom stroke length *2		In 1 mm increments								

1 : Less than 5 mm with 1-color display switch and less than 10 mm with the 2-color display, off-delay, AC magnetic field proof, T1 or T8* switch are not available.
Refer to page 1160 for the number of installed switches and the min. stroke length.
*2 : Total length is obtained by directly entering the value of custom stroke length.

How to order mounting bracket

Bore size (mm) / Mounting bracket	ø16	ø20	ø25	ø32	ø40	ø50	ø63	ø80	ø100
Foot (LB)	SSD-LB-16	SSD-LB-20	SSD-LB-25	SSD-LB-32	SSD-LB-40	SSD-LB-50	SSD-LB-63	SSD-LB-80	SSD-LB-100
Foot (LB2)	SSD-LB2-16	SSD-LB2-20	SSD-LB2-25	SSD-LB2-32	SSD-LB2-40	SSD-LB2-50	SSD-LB2-63	SSD-LB2-80	SSD-LB2-100
Flange (FA/FB)	SSD-FA-16	SSD-FA-20	SSD-FA-25	SSD-FA-32	SSD-FA-40	SSD-FA-50	SSD-FA-63	SSD-FA-80	SSD-FA-100
Clevis bracket (CB)	SSD-CB-16	SSD-CB-20	SSD-CB-25	SSD-CB-32	SSD-CB-40	SSD-CB-50	SSD-CB-63	SSD-CB-80	SSD-CB-100
Clevis bracket (CB2)	SSD-CB2-16	SSD-CB2-20	SSD-CB2-25	SSD-CB2-32	SSD-CB2-40	SSD-CB2-50	SSD-CB2-63	SSD-CB2-80	SSD-CB2-100

*1: The foot mounting bracket is provided as 2 pcs./set.

Specifications for rechargeable battery (catalog No. CC-1226A)

● Design compatible with rechargeable battery manufacturing process

SSD-Q····· **P4***

Internal structure and parts list (ø16 to ø25)

● SSD-QL-16 to 25-R
(double acting/single rod/with switch/rod side position locking)

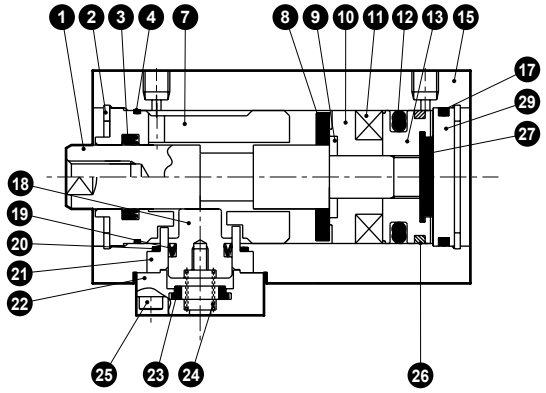

● SSD-QL-16 to 25-H
(double acting/single rod/with switch/head side position locking)

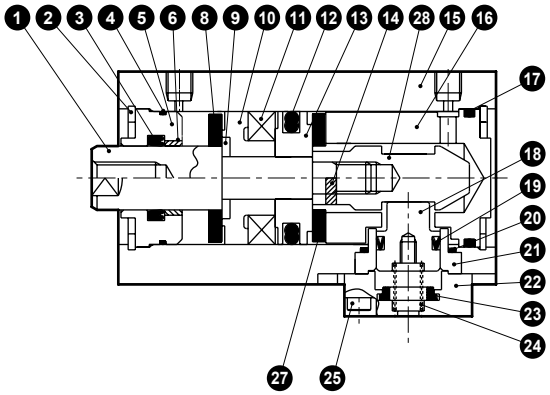

● SSD-Q-16 to 25-R
(double acting/single rod/rod side position locking)

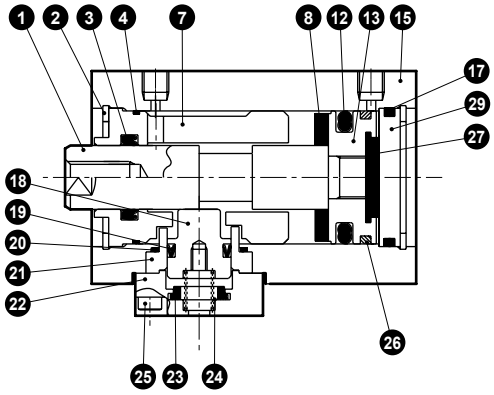

● SSD-Q-16 to 25-H
(double acting/single rod/head side position locking)

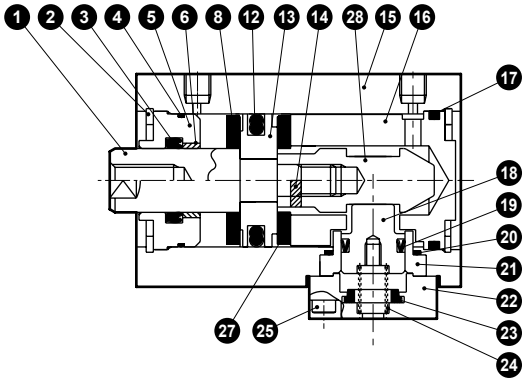

Parts list

No.	Part name	Material	Remarks	No.	Part name	Material	Remarks
1	Piston rod	Stainless steel	Industrial chrome plating	15	Body	Aluminum alloy	Hard alumite
2	C type snap ring	Steel	Zinc phosphate	16	Head cover	Aluminum alloy	Chromate
3	Rod packing	Nitrile rubber		17	O-ring	Nitrile rubber	
4	Rod metal gasket	Nitrile rubber		18	Stopper piston	Steel	Nitriding
5	Rod metal	Special aluminum	Alumite	19	Stopper packing	Nitrile rubber	
6	Bush	Oiles drymet	Only for ø20 and ø25 H sides	20	O-ring	Nitrile rubber	
7	Rod cover	Aluminum alloy	Alumite	21	Stopper housing	Aluminum alloy	Alumite
8	Cushion rubber R	Urethane rubber		22	Stopper cover	Aluminum alloy	Alumite
9	Spacer washer	Stainless steel		23	Cushion rubber	Urethane rubber	
10	Spacer	Special resin		24	Coil spring	Piano wire	Electrodeposition
11	Magnet	Plastic		25	Hexagon socket head cap screw	Steel	Black galvanizing
12	Piston packing	Nitrile rubber		26	Wear ring	Polyacetal resin	
13	Piston	Aluminum alloy	Chromate	27	Cushion rubber H	Urethane rubber	
				28	Sleeve	Steel	Nitriding
14	Spring pin	Steel	Black finish ø20, ø25	29	Cover	Aluminum alloy	Chromate

Repair parts list

Bore size (mm)	Kit No.		Repair parts No.
	With rod side position locking	With head side position locking	
ø16	SSD-Q-R-16K	SSD-Q-H-16K	3 4 8 12 17 19 20 23 26 27
ø20	SSD-Q-R-20K	SSD-Q-H-20K	
ø25	SSD-Q-R-25K	SSD-Q-H-25K	

*1: 26 is not available with head side position locking.

Internal structure and parts list (ø32 to ø40)

● SSD-QL-32 to 40-R
(double acting/single rod/with switch/rod side position locking)

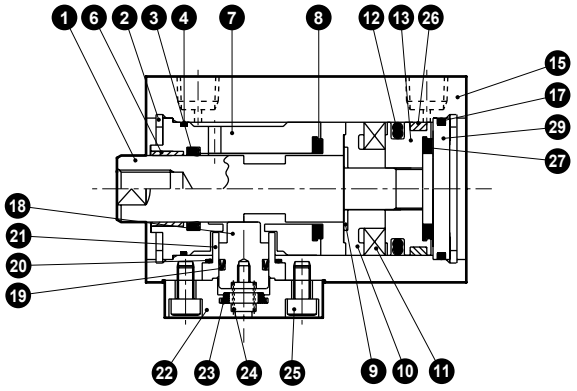

● SSD-QL-32 to 40-H
(double acting/single rod/with switch/head side position locking)

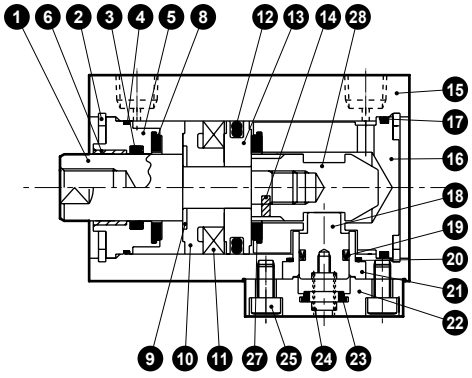

● SSD-Q-32 to 40-R
(double acting/single rod/rod side position locking)

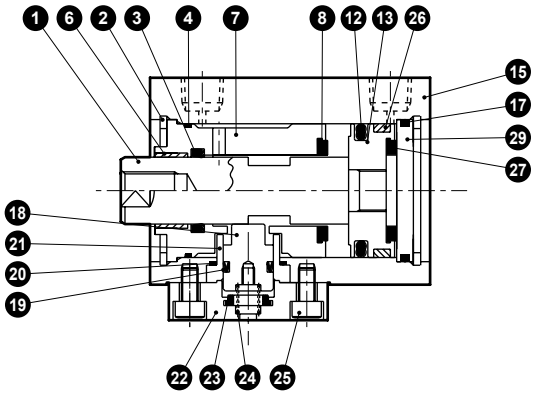

● SSD-Q-32 to 40-H
(double acting/single rod/head side position locking)

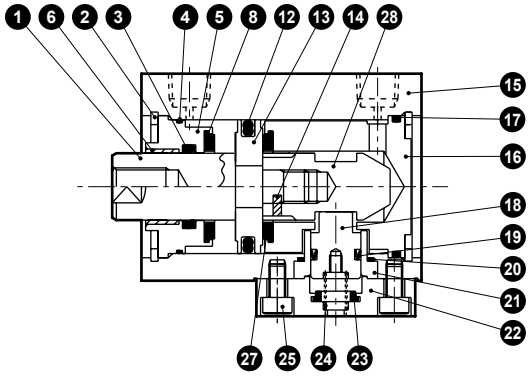

Parts list

No.	Part name	Material	Remarks	No.	Part name	Material	Remarks
1	Piston rod	Steel	Industrial chrome plating	16	Head cover	Aluminum alloy	Chromate
2	C type snap ring	Steel	Zinc phosphate	17	O-ring	Nitrile rubber	
3	Rod packing	Nitrile rubber		18	Stopper piston	Steel	Nitriding
4	Rod metal gasket	Nitrile rubber		19	Stopper packing	Nitrile rubber	
5	Rod metal	Special aluminum	Alumite	20	O-ring	Nitrile rubber	
6	Bush	Oiles drymet		21	Stopper housing	Aluminum alloy	Alumite
7	Rod cover	Aluminum alloy	Alumite	22	Stopper cover	Aluminum alloy	Alumite
8	Cushion rubber R	Urethane rubber		23	Cushion rubber	Urethane rubber	
9	Spacer washer	Stainless steel		24	Coil spring	Piano wire	Electrodeposition
10	Spacer	Special resin		25	Hexagon socket head cap screw	Steel	Black galvanizing
11	Magnet	Plastic		26	Wear ring	Polyacetal resin	
12	Piston packing	Nitrile rubber		27	Cushion rubber H	Urethane rubber	
13	Piston	Aluminum alloy	Chromate	28	Sleeve	Steel	Nitriding
14	Spring pin	Steel	Black finish	29	Cover	Aluminum alloy	Chromate
15	Body	Aluminum alloy	Hard alumite				

Repair parts list

Bore size (mm)	Kit No.		Repair parts No.
	With rod side position locking	With head side position locking	
ø32	SSD-Q-R-32K	SSD-Q-H-32K	3 4 8 12 17
ø40	SSD-Q-R-40K	SSD-Q-H-40K	19 20 23 26 27

*1: 26 is not available with head side position locking.

Internal structure and parts list (ø50 to ø100)

● SSD-QL-50 to 100-R
(double acting/single rod/with switch/rod side position locking)

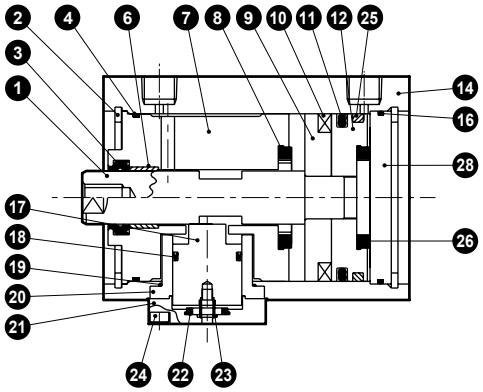

● SSD-QL-50 to 100-H
(double acting/single rod/with switch/head side position locking)

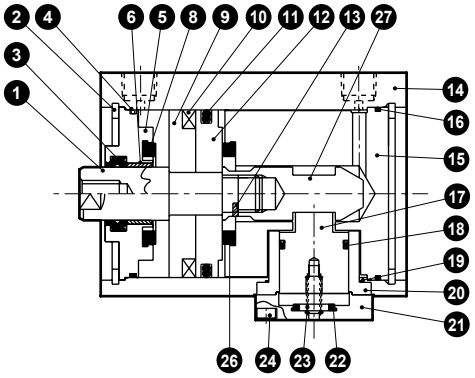

● SSD-Q-50 to 100-R
(double acting/single rod/rod side position locking)

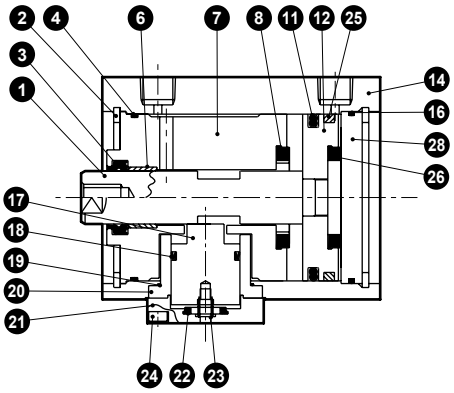

● SSD-Q-50 to 100-H
(double acting/single rod/head side position locking)

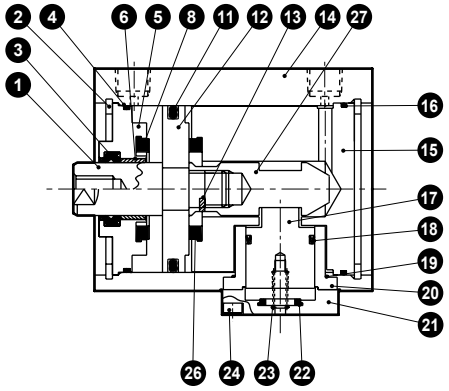

Parts list

No.	Part name	Material	Remarks	No.	Part name	Material	Remarks
1	Piston rod	Steel	Industrial chrome plating	15	Head cover	Aluminum alloy	Chromate
2	C type snap ring	Steel	Zinc phosphate	16	O-ring	Nitrile rubber	
3	Rod packing	Nitrile rubber		17	Stopper piston	Steel	Nitriding
4	Rod metal gasket	Nitrile rubber		18	Stopper packing	Nitrile rubber	
5	Rod metal	Special aluminum	Chromate	19	O-ring	Nitrile rubber	
6	Bush	Oiles drymet		20	Stopper housing	Aluminum alloy	Alumite
7	Rod cover	Aluminum alloy	Chromate	21	Stopper cover	Aluminum alloy	Alumite
8	Cushion rubber R	Urethane rubber		22	Cushion rubber	Urethane rubber	
9	Spacer	ø50: Special resin ø63 to ø100: Aluminum alloy	ø63 to 100: Chromate	23	Coil spring	Piano wire	Electrodeposition
				24	Hexagon socket head cap screw	Steel	Black galvanizing
10	Magnet	Plastic		25	Wear ring	Polyacetal resin	
11	Piston packing	Nitrile rubber		26	Cushion rubber H	Urethane rubber	
12	Piston	Aluminum alloy	Chromate	27	Sleeve	Steel	Nitriding
13	Spring pin	Steel	Black finish	28	Cover	Aluminum alloy	Chromate
14	Body	Aluminum alloy	Hard alumite				

Repair parts list

Bore size (mm)	Kit No.		Repair parts No.
	With rod side position locking	With head side position locking	
ø50	SSD-Q-R-50K	SSD-Q-H-50K	3 4 8 11 16 18 19 22 25 26
ø63	SSD-Q-R-63K	SSD-Q-H-63K	
ø80	SSD-Q-R-80K	SSD-Q-H-80K	
ø100	SSD-Q-R-100K	SSD-Q-H-100K	

*1: 25 is not available with head side position locking.

Dimensions (ø16)

● Rod end male thread

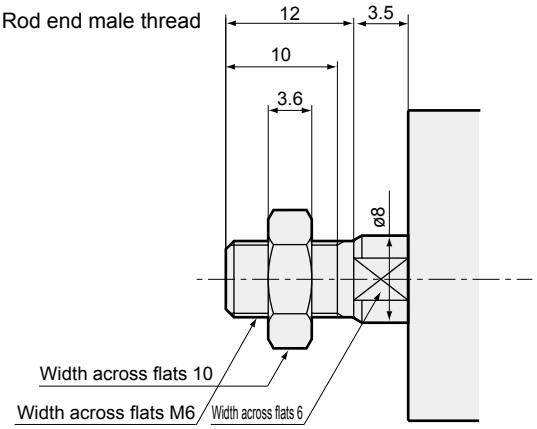

● SSD-Q(L)-16-R
(with switch/TO$^{H}/_{V}$, T5$^{H}/_{V}$, T2$^{H}/_{V}$, T3$^{H}/_{V}$/with rod side position locking)

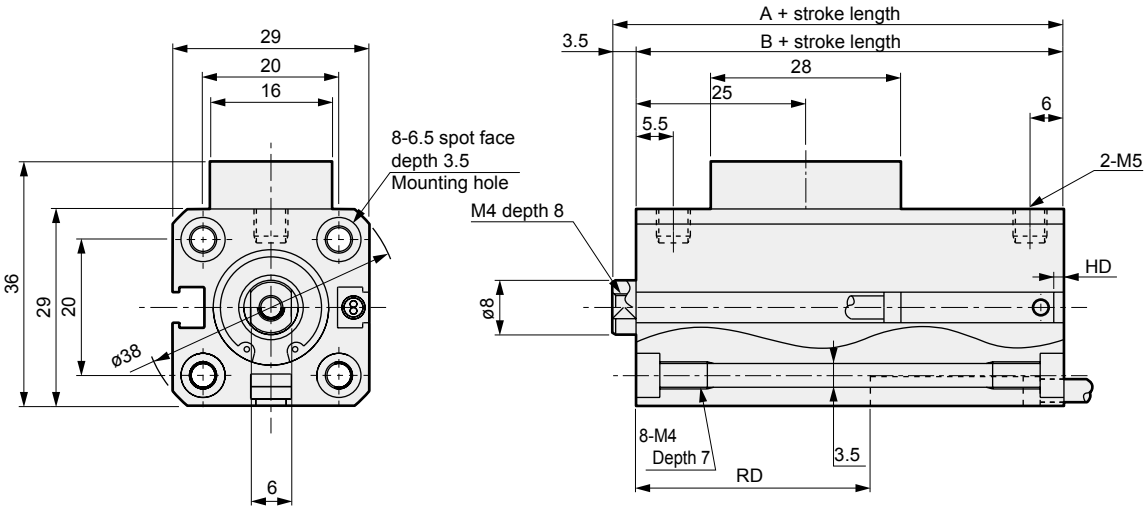

● SSD-Q(L)-16-H
(with switch/TO$^{H}/_{V}$, T5$^{H}/_{V}$, T2$^{H}/_{V}$, T3$^{H}/_{V}$/with head side position locking)

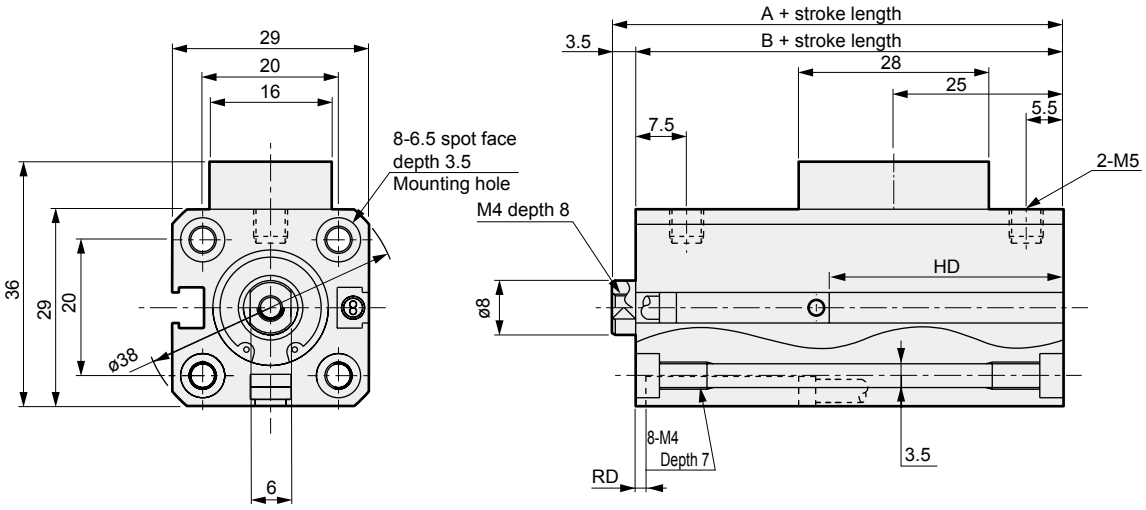

Code	Without switch		Common dimensions with switch		With rod side position locking mechanism				With head side position locking mechanism			
					T2/T3/T2W/T3W		T0/T5		T2/T3/T2W/T3W		T0/T5	
Bore size (mm)	A *1	B *1	A *1	B *1	RD *2	HD *2	RD *2	HD *2	RD *2	HD *2	RD *2	HD *2
ø16	56.5	53	61.5	58	33	6.5	33	6.5	5	34.5	5	34.5

*1 : To calculate A+ stroke length or B+ stroke length when using a custom stroke length, apply the custom stroke length value as the stroke length. (Example) For the custom stroke length of 7 mm, calculate by directly including 7 mm.
*2 : HD and RD dimensions for 5 mm stroke length differ from these dimensions according to the setting.
*3 : For dimensions of individual accessories, refer to pages 1108 to 1115.

SCP*3
CMK2
CMA2
SCM
SCG
SCA2
SCS2
CKV2
CAV2/COVP/N2
SSD2
SSG
SSD
CAT
MDC2
MVC
SMG
MSD/MSDG
FC*
STK
SRL3
SRG3
SRM3
SRT3
MRL2
MRG2
SM-25
ShkAbs
FJ
FK
Spd Contr
Ending

Dimensions (ø20, ø25) CAD

● Rod end male thread

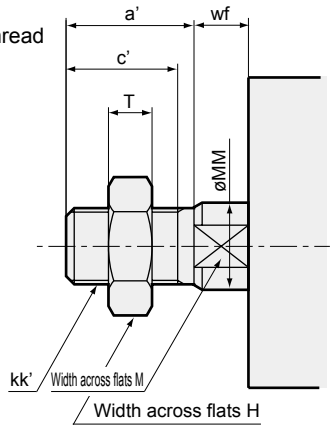

● SSD-Q(L)-20 to 25-R
(with switch/TO$^{H}/_{V}$, T5$^{H}/_{V}$, T2$^{H}/_{V}$, T3$^{H}/_{V}$/with rod side position locking)

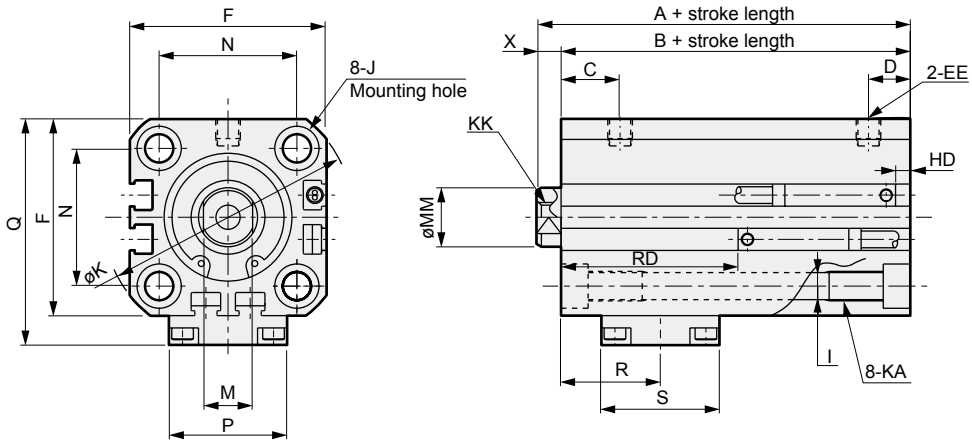

● SSD-Q(L)-20 to 25-H
(with switch/TO$^{H}/_{V}$, T5$^{H}/_{V}$, T2$^{H}/_{V}$, T3$^{H}/_{V}$/with head side position locking)

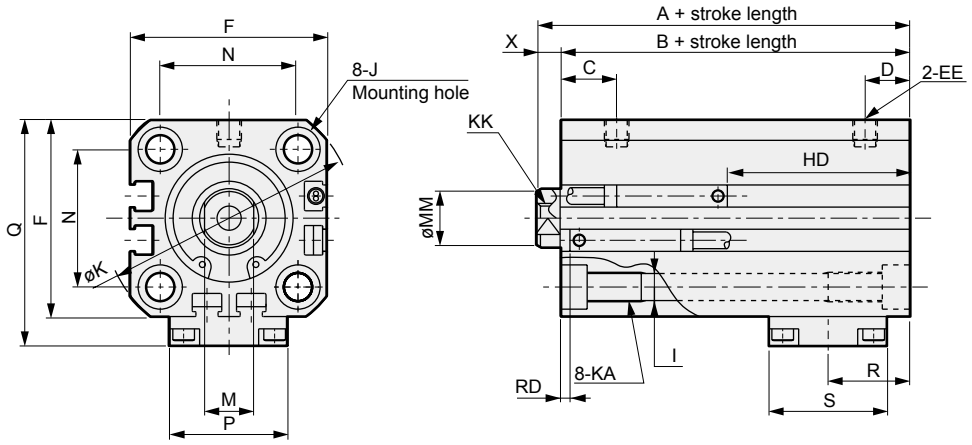

Code / Bore size (mm)	Without switch A *1	Without switch B *1	Common dimensions with switch A *1	B *1	C	D	EE	F	I	J *3	K
ø20	58	53.5	68	63.5	9.5	8.5	M5	36	5.5	9 spot face depth 5.5	47
ø25	63.5	58.5	73.5	68.5	12	10.5	M5	40	5.5	9 spot face depth 5.5	51

Code / Bore size (mm)	Common dimensions with switch KA *3	KK	M	MM	N	P	Q	S	X
ø20	M6 depth 11	M5 depth 7	8	10	25.5	21	43	23.2	4.5
ø25	M6 depth 11	M6 depth 12	10	12	28	24	46	24	5

Dimension code with switch / Bore size (mm)	With rod side position locking mechanism R	T2/T3 RD *2	T2/T3 HD *2	T0/T5 RD *2	T0/T5 HD *2	With head side position locking mechanism R	T2/T3/T2W/T3W RD *2	T2/T3/T2W/T3W HD *2	T0/T5 RD *2	T0/T5 HD *2
ø20	18.6	34.5	10	34.5	10	18	9.5	35	9.5	35
ø25	20.5	37.5	9.5	37.5	9.5	18.8	12.5	34.5	12.5	34.5

● Dimensions of rod end male thread part

Code / Bore size (mm)	a'	c'	H	kk'	M	MM	T	wf
ø20	14	12	13	M8	8	10	5	4.5
ø25	17.5	15	17	M10×1.25	10	12	6	5

*1 : To calculate A+ stroke length or B+ stroke length when using a custom stroke length, apply the custom stroke length value as the stroke length. (Example) For the custom stroke length of 7 mm, calculate by directly including 7 mm.
*2 : HD and RD dimensions for 5 mm stroke length differ from these dimensions according to the setting.
*3 : When longer than 150 mm stroke for ø25, there is no spot face J. KA dimension for this case is 17.
*4 : For dimensions of individual accessories, refer to pages 1108 to 1115.

Dimensions (ø32 to ø100)

● SSD-Q(L)-32 to 100R
(with switch/TO$^{H}/_{V}$, T5$^{H}/_{V}$, T2$^{H}/_{V}$, T3$^{H}/_{V}$/with rod side position locking)

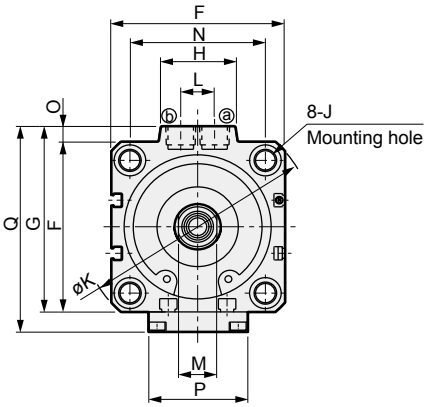

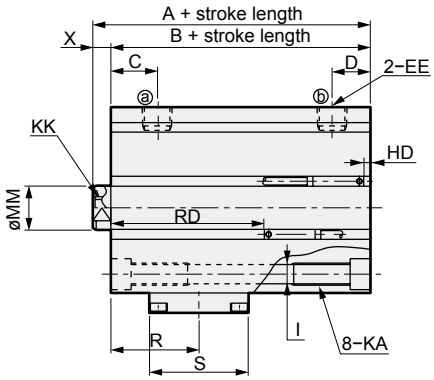

● Rod end male thread

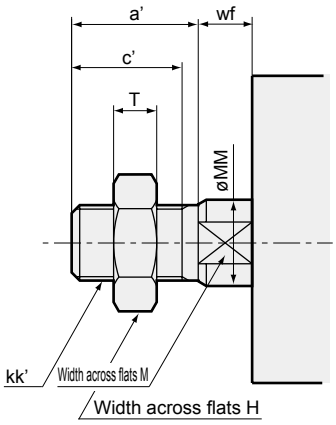

● SSD-Q(L)-32 to 100-H
(with switch/TO$^{H}/_{V}$, T5$^{H}/_{V}$, T2$^{H}/_{V}$, T3$^{H}/_{V}$/with head side position locking)

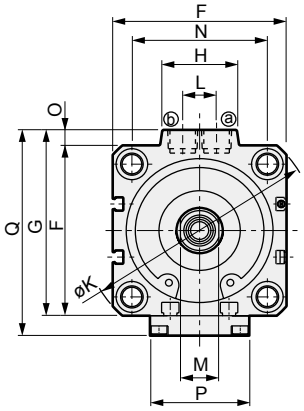

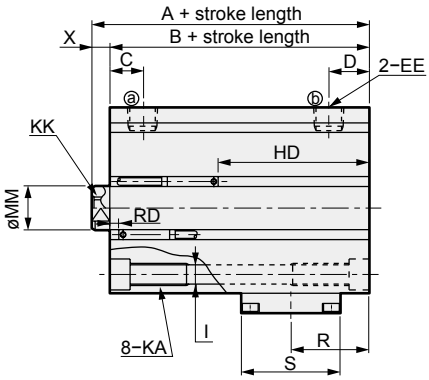

[Bore size ø100]

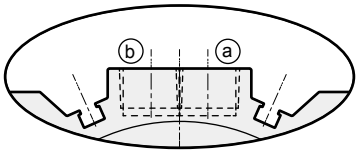

* Only for ø100, the port surface has switch grooves.

Code / Bore size (mm)	Without switch A *1	Without switch B *1	Common dimensions with switch A *1	B *1	C	D	EE	F	G	H	I	J *2	K
ø32	69	62	79	72	11	10	Rc1/8	45	49.5	24	5.5	9 spot face depth 5.5	60
ø40	83	76	93	86	14	11	Rc1/8	52	57	24	5.5	9 spot face depth 5.5	69
ø50	102.5	94.5	112.5	104.5	14.5	12.5	Rc1/4	64	71	33	6.9	11 spot face depth 6.5	86
ø63	108	100	118	110	18.5	17	Rc1/4	77	84	33	8.7	14 spot face depth 9	103
ø80	139	129	149	139	18	17	Rc3/8	98	104	38	10.5	17.5 spot face depth 11	132
ø100	141	129	151	139	23	21	Rc3/8	117	123.5	38	10.5	17.5 spot face depth 11	156

Code / Bore size (mm)	Common dimensions with switch KA *2	KK	L	M	MM	N	O	P	Q	S	X
ø32	M6 depth 11	M8 depth 13	10	14	16	34	4.5	24	58	38	7
ø40	M6 depth 11	M8 depth 13	10	14	16	40	5	24	65.5	38	7
ø50	M8 depth 13	M10 depth 15	15	17	20	50	7	44	79.5	43	8
ø63	M10 depth 25	M10 depth 15	15	17	20	60	7	47	92.5	47	8
ø80	M12 depth 28	M16 depth 21	15	22	25	77	6	47	112.5	47	10
ø100	M12 depth 28	M20 depth 27	15	27	30	94	6.5	55	133.5	55	12

Dimension code with switch / Bore size (mm)	With rod side position locking mechanism R	T2/T3/T2W/T3W RD *2	T2/T3/T2W/T3W HD *2	T0/T5 RD *2	T0/T5 HD *2	With head side position locking mechanism R	T2/T3/T2W/T3W RD *2	T2/T3/T2W/T3W HD *2	T0/T5 RD *2	T0/T5 HD *2
ø32	23.2	40.5	13	40.5	13	20.9	15.5	38	15.5	38
ø40	36.2	53	14	53	14	23.9	21	46	21	46
ø50	39.1	70.5	15	70.5	15	33.4	20.5	65	20.5	65
ø63	39	69	22.5	69	22.5	34.8	19	73	19	73
ø80	60	96	24	96	24	52	21.5	99	21.5	99
ø100	57	91	29.5	91	29.5	50	25.5	95	25.5	95

Table 1

Bore size	J	KA
ø32	-	17
ø40	-	17
ø50	-	20
ø63	-	34
ø80	-	35
ø100	-	35

● Dimensions of rod end male thread part

Code	a'	c'	H	kk'	M	MM	T	wf
ø32	23.5	20.5	22	M14×1.5	14	16	8	5
ø40	23.5	20.5	22	M14×1.5	14	16	8	5
ø50	28.5	26	27	M18×1.5	17	20	11	5
ø63	28.5	26	27	M18×1.5	17	20	11	5
ø80	35.5	32.5	32	M22×1.5	22	25	13	8
ø100	35.5	32.5	41	M26×1.5	27	30	16	8

*1 : To calculate A+ stroke length or B+ stroke length when using a custom stroke length, apply the custom stroke length value as the stroke length.
(Example) For the custom stroke length of 7 mm, calculate by directly including 7 mm.
*2 : When longer than 150 mm stroke for ø32 to ø63 or longer than 130 mm stroke for ø80 and ø100, there is no spot face J.
KA dimensions for this case are indicated in Table 1.
3 : Refer to page 1313 for HD, RD and protruding dimensions of the 2-color display, off-delay, AC magnetic field proof, T1 and T8* switches.

* For dimensions of individual accessories, refer to pages 1108 to 1115.

Dimensions (with the 2-color display, off-delay, AC magnetic field proof, T1* or T8* switch)

● SSD-QL-16-R (with switch/T2/3Y, T2J, T8, T2YD, T2YDT, T1/with rod side position locking)

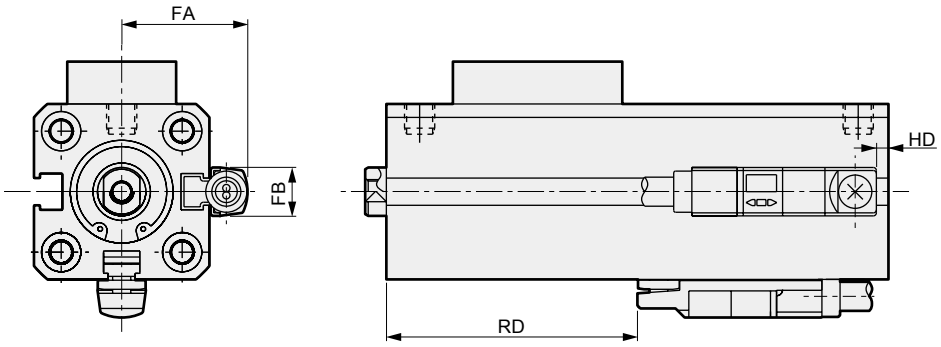

● SSD-QL-20 to 25-R (with switch/T2/3Y, T2J, T8, T2YD, T2YDT, T1/with rod side position locking)

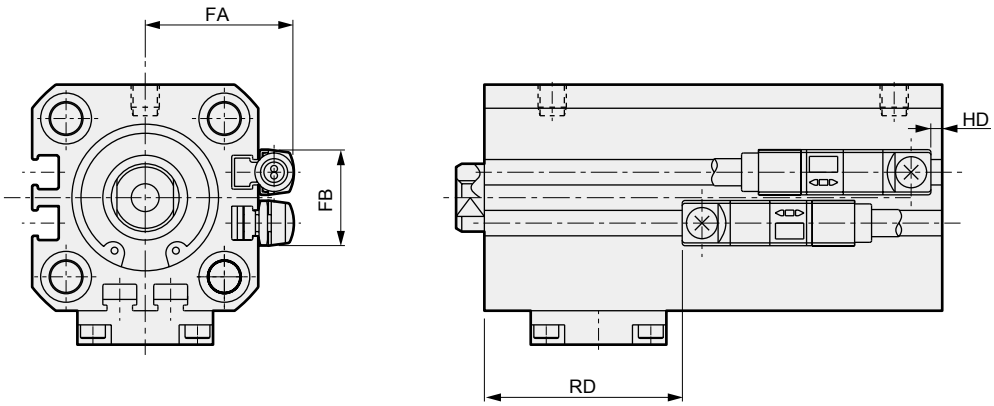

● SSD-QL-32 to 100-R (with switch/T2/3Y, T2J, T8, T2YD, T2YDT, T1/with rod side position locking)

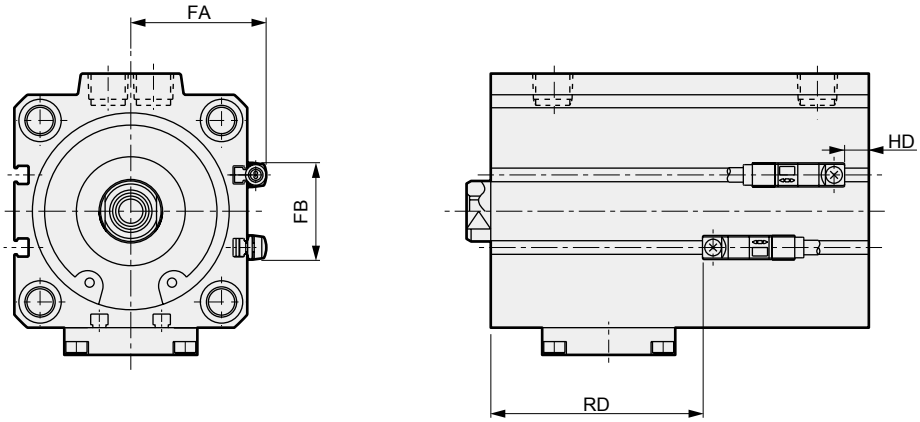

Code	T2/3Y, T2J				T2YD, T2YDT, T1				T8			
Bore size (mm)	FA	FB	RD	HD	FA	FB	RD	HD	FA	FB	RD	HD
ø16	20.8	8	31.5	5	25.8	8	31.5	5	-	-	-	-
ø20	24.3	16	33	8.5	29.3	16	33	8.5	24.3	16	28.5	4
ø25	26.3	17	36.5	8	31.3	17	36.5	8	26.3	17	31.5	3.5
ø32	28.8	24	39	11.5	33.8	24	39	11.5	28.8	24	34.5	7
ø40	32.3	31	51.5	12.5	37.3	31	51.5	12.5	32.3	31	47	8
ø50	38.3	32	69.5	13.5	43.3	32	69.5	13.5	38.3	32	64.5	9
ø63	44.8	32	67.5	21	49.8	32	67.5	21	44.8	32	63	16.5
ø80	55.3	32	94.5	22.5	60.3	32	94.5	22.5	55.3	32	90	18
ø100	64.8	32	89.5	28	69.8	32	89.5	28	64.8	32	85	23.5

Dimensions (with the 2-color display, off-delay, AC magnetic field proof, T1* or T8* switch)

● SSD-QL-16-H (with switch/T2/3Y, T2J, T8, T2YD, T2YDT, T1/with head side position locking)

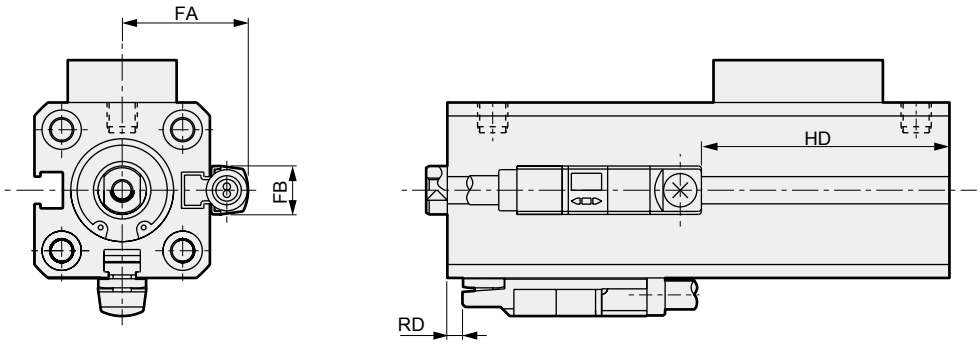

● SSD-QL-20～25-H (with switch/T2/3Y, T2J, T8, T2YD, T2YDT, T1/with head side position locking)

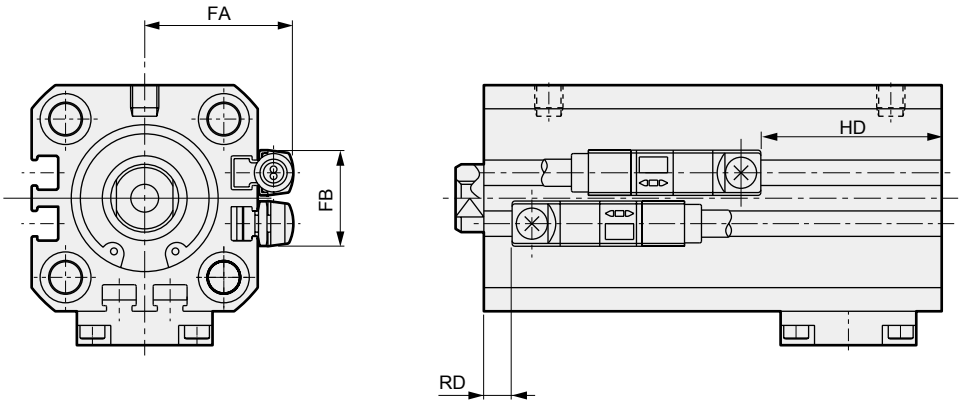

● SSD-QL-32～100-H (with switch/T2/3Y, T2J, T8, T2YD, T2YDT, T1/with head side position locking)

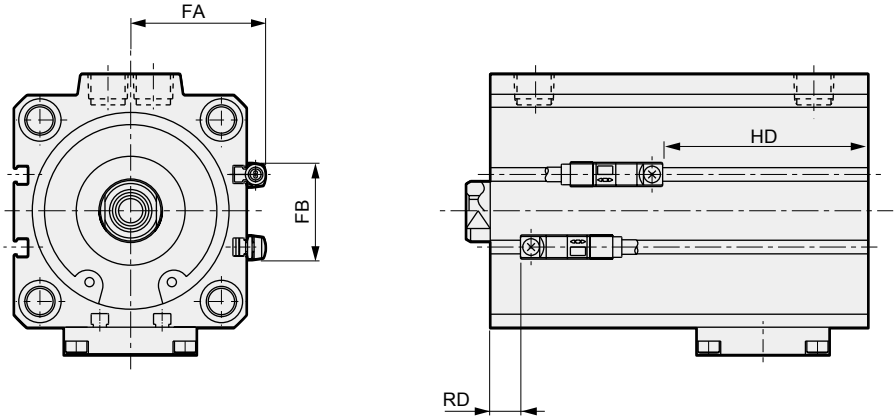

Code	T2/3Y, T2J				T2YD, T2YDT, T1				T8			
Bore size (mm)	FA	FB	RD	HD	FA	FB	RD	HD	FA	FB	RD	HD
ø16	20.8	8	3.5	33	25.8	8	3.5	33	20.8	8	-	-
ø20	24.3	16	8	33.5	29.3	16	8	33.5	24.3	16	3.5	29
ø25	26.3	17	11.5	33	31.3	17	11.5	33	26.3	17	6.5	28.5
ø32	28.8	24	14	36.5	33.8	24	14	36.5	28.8	24	9.5	32
ø40	32.3	31	20	44	37.3	31	20	44	32.3	31	15	40
ø50	38.3	32	19.5	63.5	43.3	32	19.5	63.5	38.3	32	14.5	59
ø63	44.8	32	17.5	71.5	49.8	32	17.5	71.5	44.8	32	13	67
ø80	55.3	32	20	97.5	60.3	32	20	97.5	55.3	32	15.5	93
ø100	64.8	32	24	93.5	69.8	32	24	93.5	64.8	32	19.5	89

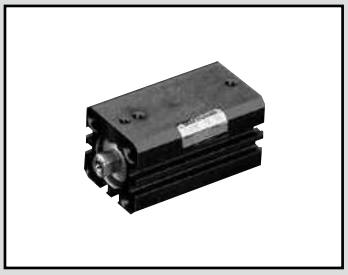

Compact cylinder double acting/fine speed

SSD-F/SSD-KF Series

● Bore size: ø12/ø16/ø20/ø25/ø32/ø40/ø50/ø63/ø80/ø100

JIS symbol

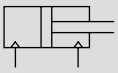

RoHS CAD

Specifications

1 MPa = 10 bar

Item	SSD-F, SSD-LF (with switch)										SSD-KF, SSD-KLF (with switch)									
Bore size mm	ø12	ø16	ø20	ø25	ø32	ø40	ø50	ø63	ø80	ø100	ø12	ø16	ø20	ø25	ø32	ø40	ø50	ø63	ø80	ø100
Actuation	Double acting																			
Working fluid	Compressed air																			
Max. working pressure MPa	1.0 (≈150 psi, 10 bar)																			
Min. working pressure MPa	0.1 (≈15 psi, 1 bar)							0.05 (≈7.3 psi)			0.1 (≈15 psi, 1 bar)							0.05 (≈7.3 psi)		
Proof pressure MPa	1.6 (≈230 psi, 16 bar)																			
Ambient temperature °C	5 (41°F) to 60 (140°F)																			
Port size	M5				Rc1/8		Rc1/4		Rc3/8		M5				Rc1/8		Rc1/4		Rc3/8	
Stroke tolerance mm	+1.0 0										+2.0 0									
Working piston speed mm/s	1 to 200																			
Cushion	None										Rubber cushion									
Lubrication	Not available																			
Allowable absorbed energy J	0.004	0.01	0.016	0.021	0.025	0.092	0.1	0.12	0.27	0.56	0.04	0.09	0.16	0.16	0.40	0.63	0.98	1.56	2.51	3.92

Stroke length

Model No.	Bore size (mm)	Standard stroke length (mm)	Max. stroke length (mm)	Min. stroke length (mm)
SSD-F SSD-LF	ø12,ø16,ø20	5, 10, 15, 20, 25, 30	30	1
	ø25,ø32,ø40,ø50	5, 10, 15, 20, 25, 30, 40, 50	50	
	ø63,ø80,ø100	5, 10, 20, 30, 40, 50		
SSD-KF SSD-KLF	ø12, ø16, ø20	5, 10, 15, 20, 25, 30, 40, 50	100	
	ø25,ø32,ø40,ø50	10, 15, 20, 25, 30, 40, 50, 60, 70, 80, 90, 100	150	
	ø63,ø80,ø100	10, 20, 30, 40, 50, 60, 70, 80, 90, 100	200	

*1 : The custom stroke length is available in 1 mm increments. However, the total length is the same as that of the next longer standard stroke length.
*2 : When using the type with a switch, refer to the table below.
*3 : Refer to pages 1320 and 1321 for the min. stroke length with mounting brackets LB and LB2.

Number of installed switches and min. stroke length (mm)

● SSD-LF

Switch quantity	SSD-LF					SSD-KLF				
	1	2	3	4	5	1	2	3	4	5
Switch model No. / Bore size (mm)	T*	T*	T*	T*	T*	T*	T*	T*	T*	T*
ø12	5	5	25	-	-	5	5	25	-	-
ø16	5	5	25	-	-	5	5	25	-	-
ø20	5	5	-	-	-	5	5	35	50	65
ø25	5	5	35	50	-	5	5	35	50	65
ø32	5	5	35	50	-	5	5	35	50	65
ø40	5	5	35	50	-	5	5	35	50	65
ø50	5	5	35	50	-	5	5	35	50	65
ø63	5	5	35	50	-	5	5	35	50	65
ø80	5	5	35	50	-	5	5	35	50	65
ø100	5	5	35	50	-	5	5	35	50	65

Note: Less than 10 mm with the 2-color display, off-delay, AC magnetic field proof, T1* or T8* switch is not available.

Switch specifications

● 1-color/2-color display/for AC magnetic field proof

Item	Proximity 2-wire				Proximity 3-wire				Reed 2-wire							Proximity 2-wire
	T1H/ T1V	T2H/T2V/ T2JH/T2JV	T2YH/ T2YV	T2WH/ T2WV	T3H/ T3V	T3PH/ T3PV	T3YH/ T3YV	T3WH/ T3WV	T0H/T0V		T5H/T5V		T8H/T8V			T2YD (*4) T2YDT
Applications	For programmable controller, relay, compact solenoid valve	Dedicated for programmable controller			For programmable controller, relay				For programmable controller, relay		For programmable controller, relay (no lamp), serial		For programmable controller, relay			Dedicated for programmable controller
Output method	-				NPN output	PNP output	NPN output	NPN output	-							
Pwr. supp. V.	-				10 to 28 VDC				-							
Load voltage	85 to 265 VAC	10 to 30 VDC		24 VDC ±10%	30 VDC or less				12/24 VDC	100/110 VAC	5/12/24 VDC	100/110 VAC	12/24 VDC	110 VAC	220 VAC	24 VDC ±10%
Load current	5 to 100 mA	5 to 20 mA (*3)			100 mA or less		50 mA or less		5 to 50 mA	7 to 20 mA	50 mA or less	20 mA or less	5 to 50 mA	7 to 20 mA	7 to 10 mA	5 to 20 mA
Indicator lamp	LED (Lit when ON)	LED (Lit when ON)	Red/green LED (Lit when ON)	Red/green LED (Lit when ON)	LED (Lit when ON)	Yellow LED (Lit when ON)	Red/green LED (Lit when ON)	Red/green LED (Lit when ON)	LED (Lit when ON)		Without indicator lamp		LED (Lit when ON)			Red/green LED (Lit when ON)
Leakage current	≤1 mA at 100 VAC, ≤2 mA at 200 VAC	1 mA or less			10 μA or less				0 mA							1 mA or less
Weight g	1 m:33 3 m:87 5 m:142	1 m:18 3 m:49 5 m:80	1 m:33 3 m:87 5 m:142	1 m:18 3 m:49 5 m:80	1 m:18 3 m:49 5 m:80		1 m:33 3 m:87 5 m:142	1 m:18 3 m:49 5 m:80	1 m:18 3 m:49 5 m:80				1 m:33 3 m:87 5 m:142			1 m:61 3 m:166 5 m:272

*1 : Refer to Ending Page 1 for detailed switch specifications and dimensions.
*2 : Switches other than the above models, such as switches with connectors, are also available. Refer to Ending Page 1.
*3 : The max. load current is 20 mA at 25°C. The current is lower than 20 mA if the operating ambient temperature around the switch is higher than 25°C. (5 to 10 mA at 60°C)
*4 : Switch for AC magnetic field (T2YD/T2YDT) cannot be used in DC magnetic field.

Cylinder weight

Same as SSD Series (double acting/single rod) on page 1095 and SSD-K Series (double acting/high load) on page 1119.

Theoretical thrust table

(Unit: N)

Bore size (mm)	Operating direction	Working pressure MPa 0.05	0.1	0.15	0.2	0.3	0.4	0.5	0.6	0.7	0.8	0.9	1.0
ø12	Push	-	11.3	17.0	22.6	33.9	45.2	56.5	67.9	79.2	90.5	1.02×10^2	1.13×10^2
	Pull	-	8.48	12.7	17.0	25.4	33.9	42.4	50.9	59.4	67.9	76.3	84.8
ø16	Push	-	20.1	30.2	40.2	60.3	80.4	1.01×10^2	1.21×10^2	1.41×10^2	1.61×10^2	1.81×10^2	2.01×10^2
	Pull	-	15.1	22.6	30.2	45.2	60.3	75.4	90.5	1.06×10^2	1.21×10^2	1.36×10^2	1.51×10^2
ø20	Push	-	31.4	47.1	62.8	94.2	1.26×10^2	1.57×10^2	1.88×10^2	2.20×10^2	2.51×10^2	2.83×10^2	3.14×10^2
	Pull	-	23.6	35.3	47.1	70.7	94.2	1.18×10^2	1.41×10^2	1.65×10^2	1.88×10^2	2.12×10^2	2.36×10^2
ø25	Push	-	49.1	73.6	98.2	1.47×10^2	1.96×10^2	2.45×10^2	2.95×10^2	3.44×10^2	3.93×10^2	4.42×10^2	4.91×10^2
	Pull	-	37.8	56.7	75.6	1.13×10^2	1.51×10^2	1.89×10^2	2.27×10^2	2.64×10^2	3.02×10^2	3.40×10^2	3.78×10^2
ø32	Push	-	80.4	1.21×10^2	1.61×10^2	2.41×10^2	3.22×10^2	4.02×10^2	4.83×10^2	5.63×10^2	6.43×10^2	7.24×10^2	8.04×10^2
	Pull	-	60.3	90.5	1.21×10^2	1.81×10^2	2.41×10^2	3.02×10^2	3.62×10^2	4.22×10^2	4.83×10^2	5.43×10^2	6.03×10^2
ø40	Push	-	1.26×10^2	1.88×10^2	2.51×10^2	3.77×10^2	5.03×10^2	6.28×10^2	7.54×10^2	8.80×10^2	1.01×10^3	1.13×10^3	1.26×10^3
	Pull	-	1.06×10^2	1.58×10^2	2.11×10^2	3.17×10^2	4.22×10^2	5.28×10^2	6.33×10^2	7.39×10^2	8.44×10^2	9.50×10^2	1.06×10^3
ø50	Push	-	1.96×10^2	2.95×10^2	3.93×10^2	5.89×10^2	7.85×10^2	9.82×10^2	1.18×10^3	1.37×10^3	1.57×10^3	1.77×10^3	1.96×10^3
	Pull	-	1.65×10^2	2.47×10^2	3.30×10^2	4.95×10^2	6.60×10^2	8.25×10^2	9.90×10^2	1.15×10^3	1.32×10^3	1.48×10^3	1.65×10^3
ø63	Push	1.56×10^2	3.12×10^2	4.68×10^2	6.23×10^2	9.35×10^2	1.25×10^3	1.56×10^3	1.87×10^3	2.18×10^3	2.49×10^3	2.81×10^3	3.12×10^3
	Pull	1.40×10^2	2.80×10^2	4.20×10^2	5.61×10^2	8.41×10^2	1.12×10^3	1.40×10^3	1.68×10^3	1.96×10^3	2.24×10^3	2.52×10^3	2.80×10^3
ø80	Push	2.51×10^2	5.03×10^2	7.54×10^2	1.01×10^3	1.51×10^3	2.01×10^3	2.51×10^3	3.02×10^3	3.52×10^3	4.02×10^3	4.52×10^3	5.03×10^3
	Pull	2.27×10^2	4.54×10^2	6.80×10^2	9.07×10^2	1.36×10^3	1.81×10^3	2.27×10^3	2.72×10^3	3.17×10^3	3.63×10^3	4.08×10^3	4.54×10^3
ø100	Push	3.93×10^2	7.85×10^2	1.18×10^3	1.57×10^3	2.36×10^3	3.14×10^3	3.93×10^3	4.71×10^3	5.50×10^3	6.28×10^3	7.07×10^3	7.85×10^3
	Pull	3.57×10^2	7.15×10^2	1.07×10^3	1.43×10^3	2.14×10^3	2.86×10^3	3.57×10^3	4.29×10^3	5.00×10^3	5.72×10^3	6.43×10^3	7.15×10^3

How to order

● Without switch (without magnet for switch)

SSD-F - 12 ◯ - 5 ——— N - LB - I

● With switch (built-in magnet for switch)

SSD-LF - 12 ◯ - 5 - T0H - R - N - LB - I

● 2-color display/off-delay, with T1* switch (double acting/single rod ø12/ø16 only) (built-in magnet for switch)

SSD-L1F - 12 ◯ - 10 - T2YH - R - N - LB - I

Ⓐ Model No.

Ⓑ Bore size

Ⓒ Port thread

Ⓓ Stroke length

Ⓔ Switch model No.
*1
*2
*3
*10

Ⓕ Switch quantity

Ⓖ Option
*4

Ⓗ Mounting bracket
*5
*6

Ⓘ Accessory
*7

Precautions for model No. selection

*1 : Switches other than Ⓔ Switch model No. are also available. (Made to order) Refer to Ending Page 1 for details.
*2 : An AC magnetic field proof switch cannot be installed on ø12 and ø16.
3 : T8 switch cannot be mounted in products with bore sizes as below.
·SSD-L1F: ø12 to ø32
·SSD-KLF: ø12, ø16
*4 : Piston rod of ø12 to ø25 is stainless steel as standard. C type snap ring is stainless steel instead of steel. The rod end male thread nut is stainless steel.
*5 : The mounting bracket is included at shipment.
*6 : The projection dimension of piston rod WF when LB2 or FA is selected is different from that of the standard. Refer to the dimensions on pages 1109 and 1110. The number of the specified protruding dimension will be added at the end of the model No. printed on the metal plate on the body.
*7 : "I" and "Y" cannot be selected together.
*8 : Refer to Ending Page 85 for custom specifications of rod end form.
*9 : Refer to pages 1086 and 1089 for combinations of variations/options.
*10 : Switches are shipped with the product. Contact CKD if assembling before shipment is necessary.

[Example of model No.]

SSD-LF-12-5-T0H-R-N

Model: Compact cylinder, fine speed

Ⓐ Model No.	: Double acting/single rod
Ⓑ Bore size	: ø12 mm
Ⓒ Port thread	: Rc thread
Ⓓ Stroke length	: 5 mm
Ⓔ Switch model No.	: Reed switch T0H, lead wire 1 m
Ⓕ Switch quantity	: 1 on rod side
Ⓖ Option	: Rod end male thread

How to order switch

SW - T0H

Switch model No.
(Item Ⓔ above)

Code	Description
Ⓐ Model No.	
SSD-F	Double acting/single rod
SSD-LF	Double acting/single rod/with switch
SSD-L1F	ø12, ø16 2-color display, off-delay, with T1* switch
SSD-KF	Double acting/high load
SSD-KLF	Double acting/high load/with switch
Ⓑ Bore size (mm)	
12	ø12
16	ø16
20	ø20
25	ø25
32	ø32
40	ø40
50	ø50
63	ø63
80	ø80
100	ø100
Ⓒ Port thread	
Blank	Rc thread
NN	NPT thread (ø32 and over) (made-to-order product)
GN	G thread (ø32 and over) (made-to-order product)
Ⓓ Stroke length (mm)	
Refer to the stroke length table on the following page.	

Ⓔ Switch model No.

Axial lead wire	Radial lead wire	Contact	Voltage AC	Voltage DC	Display	Lead wire
TOH*	T0V*	Reed	●	●	1-color display	2-wire
T5H*	T5V*	Reed	●	●	Without indicator lamp	2-wire
T8H*	T8V*	Reed	●	●	1-color display	2-wire
T1H*	T1V*	Proximity	●		1-color display	2-wire
T2H*	T2V*	Proximity		●	1-color display	2-wire
T3H*	T3V*	Proximity		●	1-color display	3-wire
T3PH*	T3PV*	Proximity		●	1-color display	3-wire
T2WH*	T2WV*	Proximity		●	2-color display	2-wire
T2YH*	T2YV*	Proximity		●	2-color display	2-wire
T3WH*	T3WV*	Proximity		●	2-color display	3-wire
T3YH*	T3YV*	Proximity		●	2-color display	3-wire
T2JH*	T2JV*	Proximity		●	1-color display off-delay	2-wire
T2YD*	-	Proximity		●	2-color display AC magnetic field	2-wire
T2YDT*	-	Proximity		●	2-color display AC magnetic field	2-wire
T2HR3	T2VR3	Proximity		●	1-color display (bend resist lead wire specs)	2-wire

* Lead wire length	
Blank	1 m (standard)
3	3 m (option)
5	5 m (option)
Ⓕ Switch quantity	
R	1 on rod side
H	1 on head side
D	2
Ⓖ Option	
Blank	Rod end female thread
N	Rod end male thread
M	Piston rod material (stainless steel)
Ⓗ Mounting bracket	
LB	Axial foot
LB2	Axial foot (compact)
CB	Clevis bracket (pin and snap ring included)
CB2	Clevis bracket (compact) (pin and snap ring included)
FA	Rod side flange
FB	Head side flange
Ⓘ Accessory (available when rod end male thread "N" is selected)	
I	Rod eye
I2	Rod eye (compact)
Y	Rod clevis (pin and snap ring included)
Y2	Rod clevis (compact) (pin and snap ring included)

[Stroke length table]

● SSD-F

Stroke length (mm)		Applicable bore size									
		ø12	ø16	ø20	ø25	ø32	ø40	ø50	ø63	ø80	ø100
Standard stroke length	5	●	●	●	●	●	●	●	●	●	●
	10	●	●	●	●	●	●	●	●	●	●
	15	●	●	●	●	●	●	●			
	20	●	●	●	●	●	●	●	●	●	●
	25	●	●	●	●	●	●	●			
	30	●	●	●	●	●	●	●	●	●	●
	40				●	●	●	●	●	●	●
	50				●	●	●	●	●	●	●
Min. stroke length (mm) *1		1									
Max. stroke length (mm)		30			50						
Custom stroke length *2		In 1 mm increments									

1 : Less than 5 mm with 1-color display switch and less than 10 mm with the 2-color display, off-delay, AC strong magnetic field proof, T1 or T8* switch are not available. Refer to page 1172 for the number of installed switches and the min. stroke length.
*2 : The total length is the same as that of the next longer standard stroke length.
*3 : Refer to pages 1320 and 1321 for the min. stroke length with mounting brackets LB and LB2.

● SSD-KF

Stroke length (mm)		Applicable bore size									
		ø12	ø16	ø20	ø25	ø32	ø40	ø50	ø63	ø80	ø100
Standard stroke length	5	●	●	●	●	●	●	●			
	10	●	●	●	●	●	●	●	●	●	●
	15	●	●	●	●	●	●	●			
	20	●	●	●	●	●	●	●	●	●	●
	25	●	●	●	●	●	●	●			
	30	●	●	●	●	●	●	●	●	●	●
	40	●	●	●	●	●	●	●	●	●	●
	50	●	●	●	●	●	●	●	●	●	●
	60				●	●	●	●	●	●	●
	70				●	●	●	●	●	●	●
	80				●	●	●	●	●	●	●
	90				●	●	●	●	●	●	●
	100				●	●	●	●	●	●	●
Min. stroke length (mm) *1		1									
Max. stroke length (mm)		100			150				200		
Custom stroke length *2		In 1 mm increments									

*1 : Less than 5 mm for 1-color display and stroke length less than 10 mm for the 2-color display with AC magnetic field proof switch are not available.
Refer to page 1172 for the number of installed switches and the min. stroke length.
*2 : The total length is the same as that of the next longer standard stroke length.
*3 : Refer to pages 1320 and 1321 for the min. stroke length with mounting brackets LB and LB2.

Clean-room specifications (Catalog No. CB-033SA)

● Anti-dust generation structure for use in cleanrooms

SSD-F P7*
SSD-KF P7*

How to order mounting bracket

Bore size (mm) / Mounting bracket	ø20	ø25	ø32	ø40	ø50	ø63	ø80	ø100
Foot (LB)	SSD-LB-20	SSD-LB-25	SSD-LB-32	SSD-LB-40	SSD-LB-50	SSD-LB-63	SSD-LB-80	SSD-LB-100
Foot (LB2)	SSD-LB2-20	SSD-LB2-25	SSD-LB2-32	SSD-LB2-40	SSD-LB2-50	SSD-LB2-63	SSD-LB2-80	SSD-LB2-100
Flange (FA/FB)	SSD-FA-20	SSD-FA-25	SSD-FA-32	SSD-FA-40	SSD-FA-50	SSD-FA-63	SSD-FA-80	SSD-FA-100
Clevis bracket (CB)	SSD-CB-20	SSD-CB-25	SSD-CB-32	SSD-CB-40	SSD-CB-50	SSD-CB-63	SSD-CB-80	SSD-CB-100
Clevis bracket (CB2)	SSD-CB2-20	SSD-CB2-25	SSD-CB2-32	SSD-CB2-40	SSD-CB2-50	SSD-CB2-63	SSD-CB2-80	SSD-CB2-100

*1: The foot mounting bracket is provided as 2 pcs./set.

Dimensions

Same as SSD Series (double acting/single rod) and SSD-K Series (double acting/high load).
Refer to pages 1103 to 1105 and 1122 to 1125.

Cylinder weight table (the weight of the switches is when there are 2 cylinder switches.)

● SSD-F

(Unit: g)

Stroke length (mm)	5		10		15		20		25		30		40		50	
Bore size (mm)	No switch	With switch	No switch	With switch	No switch	With switch	No switch	With switch	No switch	With switch	No switch	With switch	No switch	With switch	No switch	With switch
ø12	36	86	44	86	53	95	61	103	70	112	72	114	—	—	—	—
ø16	48	104	59	104	69	114	80	125	91	136	102	147	—	—	—	—
ø20	63	118	75	150	88	163	101	176	113	188	126	201	—	—	—	—
ø25	87	178	102	193	118	209	134	225	150	241	165	256	197	288	228	319
ø32	122	236	144	258	166	280	188	302	209	323	231	345	275	389	318	432
ø40	183	326	210	353	236	379	263	406	290	433	316	459	369	512	422	565
ø50	299	493	341	535	383	577	425	619	467	661	510	704	594	788	678	872
ø63	452	731	507	786	—	—	617	896	—	—	727	1006	838	1117	948	1227
ø80	841	1254	928	1341	—	—	1101	1514	—	—	1274	1687	1448	1861	1621	2034
ø100	1319	1886	1433	2000	—	—	1660	2227	—	—	1888	2455	2115	2682	2343	2910

● SSD-KF

(Unit: g)

Stroke length (mm)	5		10		15		20		25		30		40		50		60		70		80		90		100	
Bore size (mm)	No switch	Switch	No switch	Switch	No switch	Switch	No switch	Switch	No switch	Switch	No switch	Switch	No switch	Switch	No switch	Switch	No switch	Switch	No switch	Switch	No switch	Switch	No switch	Switch	No switch	Switch
ø12	44	86	53	95	61	103	70	112	78	121	87	129	104	146	121	163	138	180	155	197	172	214	189	231	206	248
ø16	59	104	69	114	80	125	91	136	102	147	113	158	135	169	157	191	179	213	201	235	223	257	245	279	267	301
ø20	75	150	88	163	101	176	113	188	126	201	138	213	163	238	188	263	213	288	238	313	263	338	288	363	313	388
ø25	—	—	118	209	134	225	150	241	165	256	182	273	214	305	246	337	278	369	310	401	342	433	374	465	406	497
ø32	—	—	188	302	209	323	231	345	253	367	275	389	318	432	361	475	404	518	447	561	490	604	533	647	576	690
ø40	—	—	263	406	290	433	316	459	342	485	369	512	422	565	475	618	528	671	581	724	634	777	687	830	740	883
ø50	—	—	425	619	467	661	510	704	553	747	594	788	678	872	762	956	846	1040	930	1124	1014	1208	1098	1292	1182	1376
ø63	—	—	617	896	—	—	727	1006	—	—	838	1117	948	1227	1058	1337	1168	1447	1278	1557	1388	1667	1498	1777	1608	1887
ø80	—	—	1101	1514	—	—	1274	1687	—	—	1448	1861	1621	2034	1794	2207	1967	2380	2140	2553	2313	2726	2486	2899	2659	3072
ø100	—	—	1660	2227	—	—	1888	2455	—	—	2115	2682	2343	2910	2571	3138	2799	3366	3027	3594	3255	3822	3483	4050	3711	4278

Stroke length (mm)	110		120		130		140		150		160		170		180		190		200	
Bore size (mm)	No switch	Switch	No switch	Switch	No switch	Switch	No switch	Switch	No switch	Switch	No switch	Switch	No switch	Switch	No switch	Switch	No switch	Switch	No switch	Switch
ø25	438	529	470	561	502	593	534	625	566	657	—	—	—	—	—	—	—	—	—	—
ø32	619	733	662	776	705	819	748	862	791	905	—	—	—	—	—	—	—	—	—	—
ø40	793	936	846	989	899	1042	952	1095	1005	1148	—	—	—	—	—	—	—	—	—	—
ø50	1266	1460	1350	1544	1434	1628	1518	1712	1602	1796	—	—	—	—	—	—	—	—	—	—
ø63	1718	1997	1828	2107	1938	2217	2048	2327	2158	2437	2268	2547	2378	2657	2488	2767	2598	2877	2708	2987
ø80	2832	3245	3005	3418	3178	3591	3351	3764	3524	3937	3697	4110	3870	4283	4043	4456	4216	4629	4389	4802
ø100	3939	4506	4167	4734	4395	4962	4623	5190	4851	5418	5079	5646	5307	5874	5535	6102	5763	6830	5991	6558

Measurement data

● Measuring method

SSD-F-16-30

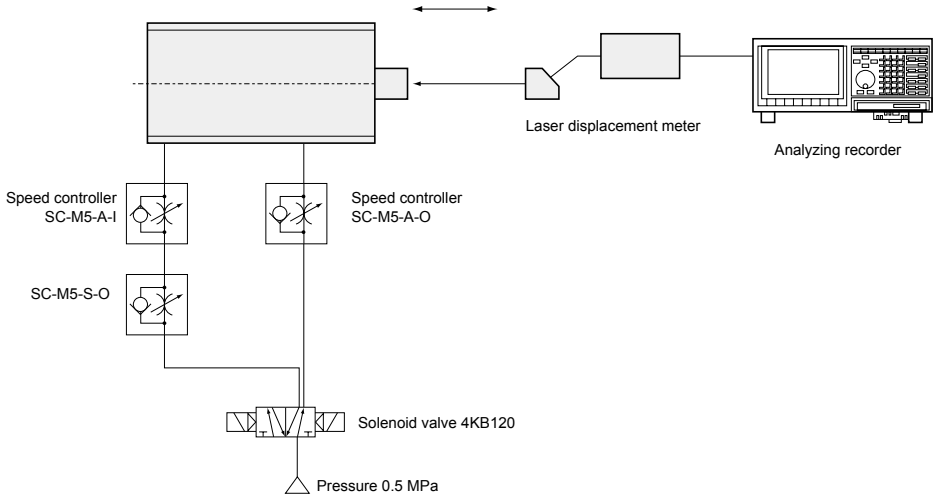

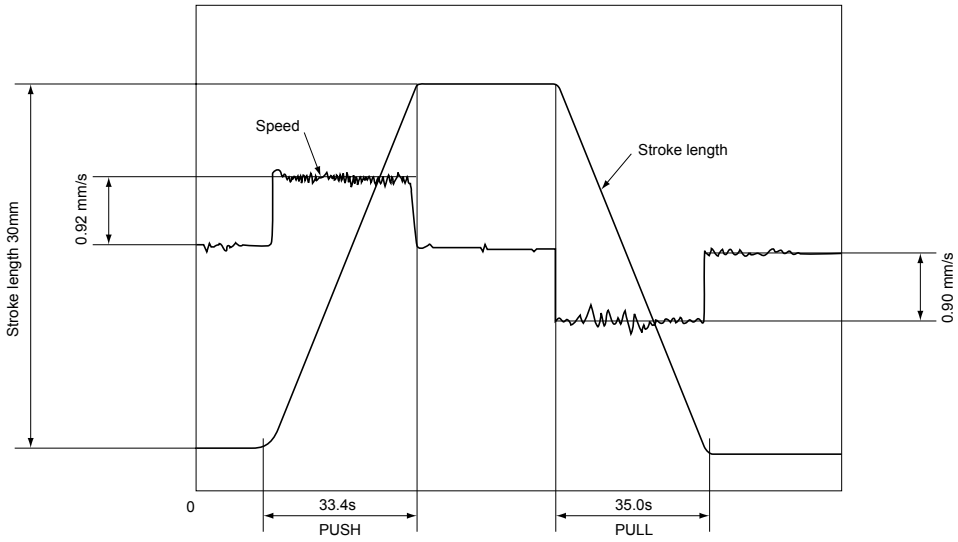

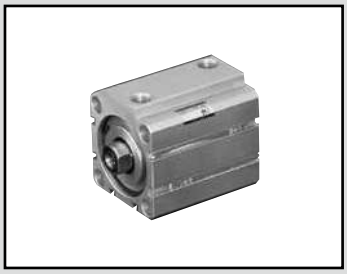

Compact cylinder double acting/low speed

SSD-O Series

● Bore size: ø12/ø16/ø20/ø25/ø32/ø40/ø50/ø63/ø83/ø100

JIS symbol

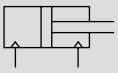

RoHS CAD

Specifications

Item	SSD-O SSD-OL (with switch)									
Bore size mm	ø12	ø16	ø20	ø25	ø32	ø40	ø50	ø63	ø80	ø100
Actuation	Double acting									
Working fluid	Compressed air									
Max. working pressure MPa	1.0 (≈150 psi, 10 bar)									
Min. working pressure MPa	0.1 (≈15 psi, 1 bar)							0.05 (≈7.3 psi, 0.5 bar)		
Proof pressure MPa	1.6 (≈230 psi, 16 bar)									
Ambient temperature °C	-10 (14°F) to 60 (140°F) (no freezing)									
Port size	M5				Rc1/8		Rc1/4		Rc3/8	
Stroke tolerance mm	+1.0 0									
Working piston speed mm/s	10 to 200									
Cushion	None									
Lubrication	Not available									
Allowable absorbed energy J	0.004	0.01	0.016	0.021	0.025	0.092	0.1	0.12	0.27	0.56

Stroke length

Bore size (mm)	Standard stroke length (mm)	Max. stroke length (mm)	Min. stroke length (mm)
ø12	5, 10, 15, 20, 25, 30	30	1
ø16			
ø20			
ø25	5, 10, 15, 20, 25, 30, 40, 50	50	
ø32			
ø40			
ø50			
ø63	5, 10, 20, 30, 40, 50	50	
ø80			
ø100			

*1 : The custom stroke length is available in 1 mm increments. However, the total length is the same as that of the next longer standard stroke length.
*2 : When using the type with a switch, refer to the table below.
*3 : Refer to pages 1320 and 1321 for the min. stroke length with mounting brackets LB and LB2.

Number of installed switches and min. stroke length (mm)

Switch quantity	1	2	3	4	5
Switch model No. / Bore size (mm)	T*	T*	T*	T*	T*
ø12	5	5	25	-	-
ø16	5	5	25	-	-
ø20	5	5	-	-	-
ø25	5	5	35	50	-
ø32	5	5	35	50	-
ø40	5	5	35	50	-
ø50	5	5	35	50	-
ø63	5	5	35	50	-
ø80	5	5	35	50	-
ø100	5	5	35	50	-

Note: Less than 10 mm with the 2-color display, off-delay, AC magnetic field proof, T1* or T8* switch is not available.

Switch specifications

● 1-color/2-color display/for AC magnetic field proof

Item	Proximity 2-wire				Proximity 3-wire				Reed 2-wire							Proximity 2-wire
	T1H/ T1V	T2H/T2V/ T2JH/T2JV	T2YH/ T2YV	T2WH/ T2WV	T3H/ T3V	T3PH/ T3PV	T3YH/ T3YV	T3WH/ T3WV	T0H/T0V		T5H/T5V		T8H/T8V			T2YD (*4) T2YDT
Applications	For programmable controller, relay, compact solenoid valve	Dedicated for programmable controller			For programmable controller, relay				For programmable controller, relay		For programmable controller, relay (no lamp), serial		For programmable controller, relay			Dedicated for programmable controller
Output method	-				NPN output	PNP output	NPN output	NPN output	-							
Pwr. supp. V.	-				10 to 28 VDC				-							
Load voltage	85 to 265 VAC	10 to 30 VDC		24 VDC ±10%	30 VDC or less				12/24 VDC	100/110 VAC	5/12/24 VDC	100/110 VAC	12/24 VDC	110 VAC	220 VAC	24 VDC ±10%
Load current	5 to 100 mA	5 to 20 mA (*3)			100 mA or less		50 mA or less		5 to 50 mA	7 to 20 mA	50 mA or less	20 mA or less	5 to 50 mA	7 to 20 mA	7 to 10 mA	5 to 20 mA
Indicator lamp	LED (Lit when ON)	LED (Lit when ON)	Red/green LED (Lit when ON)	Red/green LED (Lit when ON)	LED (Lit when ON)	Yellow LED (Lit when ON)	Red/green LED (Lit when ON)	Red/green LED (Lit when ON)	LED (Lit when ON)		Without indicator lamp		LED (Lit when ON)			Red/green LED (Lit when ON)
Leakage current	≤1 mA at 100 VAC, ≤2 mA at 200 VAC	1 mA or less			10 μA or less				0 mA							1 mA or less
Weight g	1 m:33 3 m:87 5 m:142	1 m:18 3 m:49 5 m:80	1 m:33 3 m:87 5 m:142	1 m:18 3 m:49 5 m:80	1 m:18 3 m:49 5 m:80		1 m:33 3 m:87 5 m:142	1 m:18 3 m:49 5 m:80	1 m:18 3 m:49 5 m:80				1 m:33 3 m:87 5 m:142			1 m:61 3 m:166 5 m:272

*1 : Refer to Ending Page 1 for detailed switch specifications and dimensions.
*2 : Switches other than the above models, such as switches with connectors, are also available. Refer to Ending Page 1.
*3 : The max. load current is 20 mA at 25°C. The current is lower than 20 mA if the operating ambient temperature around the switch is higher than 25°C. (5 to 10 mA at 60°C)
*4 : Switch for AC magnetic field (T2YD/T2YDT) cannot be used in DC magnetic field.

Cylinder weight table (the weight of the switches is when there are 2 cylinder switches.)

(Unit: g)

Stroke length (mm)	5		10		15		20		25		30		40		50	
Bore size (mm)	No switch	Switch	No switch	Switch	No switch	Switch	No switch	Switch	No switch	Switch	No switch	Switch	No switch	Switch	No switch	Switch
ø12	36	86	44	86	53	95	61	103	70	112	72	114	-	-	-	-
ø16	48	104	59	104	69	114	80	125	91	136	102	147	-	-	-	-
ø20	63	118	75	150	88	163	101	176	113	188	126	201	-	-	-	-
ø25	87	178	102	193	118	209	134	225	150	241	165	256	197	288	228	319
ø32	122	236	144	258	166	280	188	302	209	323	231	345	275	389	318	432
ø40	183	326	210	353	236	379	263	406	290	433	316	459	369	512	422	565
ø50	299	493	341	535	383	577	425	619	467	661	510	704	594	788	678	872
ø63	452	731	507	786	-	-	617	896	-	-	727	1006	838	1117	948	1227
ø80	841	1254	928	1341	-	-	1101	1514	-	-	1274	1687	1448	1861	1621	2034
ø100	1319	1886	1433	2000	-	-	1660	2227	-	-	1888	2455	2115	2682	2343	2910

Theoretical thrust table

(Unit: N)

Bore size (mm)	Operating direction	Working pressure MPa											
		0.05	0.1	0.15	0.2	0.3	0.4	0.5	0.6	0.7	0.8	0.9	1.0
ø12	Push	-	11.3	17.0	22.6	33.9	45.2	56.5	67.9	79.2	90.5	1.02×10^2	1.13×10^2
	Pull	-	8.48	12.7	17.0	25.4	33.9	42.4	50.9	59.4	67.9	76.3	84.8
ø16	Push	-	20.1	30.2	40.2	60.3	80.4	1.01×10^2	1.21×10^2	1.41×10^2	1.61×10^2	1.81×10^2	2.01×10^2
	Pull	-	15.1	22.6	30.2	45.2	60.3	75.4	90.5	1.06×10^2	1.21×10^2	1.36×10^2	1.51×10^2
ø20	Push	-	31.4	47.1	62.8	94.2	1.26×10^2	1.57×10^2	1.88×10^2	2.20×10^2	2.51×10^2	2.83×10^2	3.14×10^2
	Pull	-	23.6	35.3	47.1	70.7	94.2	1.18×10^2	1.41×10^2	1.65×10^2	1.88×10^2	2.12×10^2	2.36×10^2
ø25	Push	-	49.1	73.6	98.2	1.47×10^2	1.96×10^2	2.45×10^2	2.95×10^2	3.44×10^2	3.93×10^2	4.42×10^2	4.91×10^2
	Pull	-	37.8	56.7	75.6	1.13×10^2	1.51×10^2	1.89×10^2	2.27×10^2	2.64×10^2	3.02×10^2	3.40×10^2	3.78×10^2
ø32	Push	-	80.4	1.21×10^2	1.61×10^2	2.41×10^2	3.22×10^2	4.02×10^2	4.83×10^2	5.63×10^2	6.43×10^2	7.24×10^2	8.04×10^2
	Pull	-	60.3	90.5	1.21×10^2	1.81×10^2	2.41×10^2	3.02×10^2	3.62×10^2	4.22×10^2	4.83×10^2	5.43×10^2	6.03×10^2
ø40	Push	-	1.26×10^2	1.88×10^2	2.51×10^2	3.77×10^2	5.03×10^2	6.28×10^2	7.54×10^2	8.80×10^2	1.01×10^3	1.13×10^3	1.26×10^3
	Pull	-	1.06×10^2	1.58×10^2	2.11×10^2	3.17×10^2	4.22×10^2	5.28×10^2	6.33×10^2	7.39×10^2	8.44×10^2	9.50×10^2	1.06×10^3
ø50	Push	-	1.96×10^2	2.95×10^2	3.93×10^2	5.89×10^2	7.85×10^2	9.82×10^2	1.18×10^3	1.37×10^3	1.57×10^3	1.77×10^3	1.96×10^3
	Pull	-	1.65×10^2	2.47×10^2	3.30×10^2	4.95×10^2	6.60×10^2	8.25×10^2	9.90×10^2	1.15×10^3	1.32×10^3	1.48×10^3	1.65×10^3
ø63	Push	1.56×10^2	3.12×10^2	4.68×10^2	6.23×10^2	9.35×10^2	1.25×10^3	1.56×10^3	1.87×10^3	2.18×10^3	2.49×10^3	2.81×10^3	3.12×10^3
	Pull	1.40×10^2	2.80×10^2	4.20×10^2	5.61×10^2	8.41×10^2	1.12×10^3	1.40×10^3	1.68×10^3	1.96×10^3	2.24×10^3	2.52×10^3	2.80×10^3
ø80	Push	2.51×10^2	5.03×10^2	7.54×10^2	1.01×10^3	1.51×10^3	2.01×10^3	2.51×10^3	3.02×10^3	3.52×10^3	4.02×10^3	4.52×10^3	5.03×10^3
	Pull	2.27×10^2	4.54×10^2	6.80×10^2	9.07×10^2	1.36×10^3	1.81×10^3	2.27×10^3	2.72×10^3	3.17×10^3	3.63×10^3	4.08×10^3	4.54×10^3
ø100	Push	3.93×10^2	7.85×10^2	1.18×10^3	1.57×10^3	2.36×10^3	3.14×10^3	3.93×10^3	4.71×10^3	5.50×10^3	6.28×10^3	7.07×10^3	7.85×10^3
	Pull	3.57×10^2	7.15×10^2	1.07×10^3	1.43×10^3	2.14×10^3	2.86×10^3	3.57×10^3	4.29×10^3	5.00×10^3	5.72×10^3	6.43×10^3	7.15×10^3

Dimensions

Same as SSD Series (double acting/single rod). Refer to pages 1103 to 1105.

How to order

Without switch (without magnet for switch)

SSD-O — 12 ◯ - 5 ——— N - LB - I

With switch (built-in magnet for switch)

SSD-OL — 12 ◯ - 5 - T0H - R - N - LB - I

2-color display/off-delay, with T1* switch (ø12/ø16 only)

SSD-OL1 - 12 ◯ - 10 - T2YH - R - N - LB - I

Ⓐ Model No.

Ⓑ Bore size

Ⓒ Port thread

Ⓓ Stroke length

Ⓔ Switch model No.
*1
*2
*9

Ⓕ Switch quantity

Ⓖ Option
*3

Ⓗ Mounting bracket
*4
*5

Ⓘ Accessory
*6

Code	Description
Ⓐ Model No.	
SSD-O	Double acting/low speed
SSD-OL	Double acting/low speed/with switch
SSD-OL1	ø12, ø16 2-color display, off-delay, with T1* switch
Ⓑ Bore size (mm)	
12	ø12
16	ø16
20	ø20
25	ø25
32	ø32
40	ø40
50	ø50
63	ø63
80	ø80
100	ø100
Ⓒ Port thread	
Blank	Rc thread
NN	NPT thread (ø32 and over) (made-to-order product)
GN	G thread (ø32 and over) (made-to-order product)
Ⓓ Stroke length (mm)	
Refer to the stroke length table on the following page.	

Ⓔ Switch model No.

Axial lead wire	Radial lead wire	Contact	Voltage AC	Voltage DC	Display	Lead wire
TOH*	T0V*	Reed	●	●	1-color display	2-wire
T5H*	T5V*	Reed	●	●	Without indicator lamp	2-wire
T8H*	T8V*	Reed	●	●	1-color display	2-wire
T1H*	T1V*	Proximity	●		1-color display	2-wire
T2H*	T2V*	Proximity		●	1-color display	2-wire
T3H*	T3V*	Proximity		●	1-color display	3-wire
T3PH*	T3PV*	Proximity		●	1-color display	3-wire
T2WH*	T2WV*	Proximity		●	2-color display	2-wire
T2YH*	T2YV*	Proximity		●	2-color display	2-wire
T3WH*	T3WV*	Proximity		●	2-color display	3-wire
T3YH*	T3YV*	Proximity		●	2-color display	3-wire
T2JH*	T2JV*	Proximity		●	1-color display off-delay	2-wire
T2YD*	-	Proximity		●	2-color display AC magnetic field	2-wire
T2YDT*	-	Proximity		●	2-color display AC magnetic field	2-wire
T2HR3	T2VR3	Proximity		●	1-color display (bend resist lead wire specs)	2-wire

* Lead wire length	
Blank	1 m (standard)
3	3 m (option)
5	5 m (option)
Ⓕ Switch quantity	
R	1 on rod side
H	1 on head side
D	2
Ⓖ Option	
Blank	Rod end female thread
N	Rod end male thread
M	Piston rod material (stainless steel)
Ⓗ Mounting bracket	
LB	Axial foot
LB2	Axial foot (compact)
CB	Clevis bracket (pin and snap ring included)
CB2	Clevis bracket (compact) (pin and snap ring included)
FA	Rod side flange
FB	Head side flange
Ⓘ Accessory (available when rod end male thread "N" is selected)	
I	Rod eye
I2	Rod eye (compact)
Y	Rod clevis (pin and snap ring included)
Y2	Rod clevis (compact) (pin and snap ring included)

⚠ Precautions for model No. selection

*1 : Switches other than Ⓔ Switch model No. are also available. (Made to order) Refer to Ending Page 1 for details.
2 : An AC magnetic field proof switch cannot be installed on ø12 and ø16. In addition, T8 switch cannot be installed on ø12 to ø32.
*3 : Piston rod of ø12 to ø25 is stainless steel as standard. C type snap ring is stainless steel instead of steel. The rod end male thread nut is stainless steel.
*4 : The mounting bracket is included at shipment.
*5 : The projection dimension of piston rod WF when LB2 or FA is selected is different from that of the standard. Refer to the dimensions on pages 1109 and 1110. The number of the specified protruding dimension will be added at the end of the model No. printed on the metal plate on the body.
*6 : "I" and "Y" cannot be selected together.
*7 : Refer to Ending Page 85 for custom specifications of rod end form.
*8 : Refer to pages 1086 and 1087 for combinations of variations/options.
*9 : Switches are shipped with the product. Contact CKD if assembling before shipment is necessary.

[Example of model No.]

SSD-OL-12-5-T0H-R-N

Model: Compact cylinder
Double acting/low speed

Ⓑ Bore size : ø12 mm
Ⓒ Port thread : Rc thread
Ⓓ Stroke length : 5 mm
Ⓔ Switch model No. : Reed T0H switch
Ⓕ Switch quantity : 1 on rod side
Ⓖ Option : Rod end male thread

How to order switch

SW - T0H

Switch model No.
(Item Ⓔ above)

[Stroke length table]

Stroke length (mm)		Applicable bore size									
		ø12	ø16	ø20	ø25	ø32	ø40	ø50	ø63	ø80	ø100
Standard stroke length	5	●	●	●	●	●	●	●	●	●	●
	10	●	●	●	●	●	●	●	●	●	●
	15	●	●	●	●	●	●	●			
	20	●	●	●	●	●	●	●	●	●	●
	25	●	●	●	●	●	●	●			
	30	●	●	●	●	●	●	●	●	●	●
	40				●	●	●	●	●	●	●
	50				●	●	●	●	●	●	●
Min. stroke length (mm) *1		1									
Max. stroke length (mm)		30			50						
Custom stroke length *2		In 1 mm increments									

1 : Less than 5 mm with 1-color display switch and less than 10 mm with the 2-color display, off-delay, AC magnetic field proof, T1 or T8* switch are not available. Refer to page 1178 for the number of installed switches and the min. stroke length.
*2 : The total length is the same as that of the next longer standard stroke length.
*3 : Refer to pages 1320 and 1321 for the min. stroke length with mounting brackets LB and LB2.

How to order mounting bracket

Bore size (mm) / Mounting bracket	ø12	ø16	ø20	ø25	ø32	ø40	ø50	ø63	ø80	ø100
Foot (LB)	SSD-LB-12	SSD-LB-16	SSD-LB-20	SSD-LB-25	SSD-LB-32	SSD-LB-40	SSD-LB-50	SSD-LB-63	SSD-LB-80	SSD-LB-100
Foot (LB2)	SSD-LB2-12	SSD-LB2-16	SSD-LB2-20	SSD-LB2-25	SSD-LB2-32	SSD-LB2-40	SSD-LB2-50	SSD-LB2-63	SSD-LB2-80	SSD-LB2-100
Flange (FA/FB)	SSD-FA-12	SSD-FA-16	SSD-FA-20	SSD-FA-25	SSD-FA-32	SSD-FA-40	SSD-FA-50	SSD-FA-63	SSD-FA-80	SSD-FA-100
Clevis bracket (CB)	SSD-CB-12	SSD-CB-16	SSD-CB-20	SSD-CB-25	SSD-CB-32	SSD-CB-40	SSD-CB-50	SSD-CB-63	SSD-CB-80	SSD-CB-100
Clevis bracket (CB2)	SSD-CB2-12	SSD-CB2-16	SSD-CB2-20	SSD-CB2-25	SSD-CB2-32	SSD-CB2-40	SSD-CB2-50	SSD-CB2-63	SSD-CB2-80	SSD-CB2-100

*1: The foot mounting bracket is provided as 2 pcs./set.

Internal structure and parts list

● SSD-OL-12 to 25 (double acting/low speed/with switch)

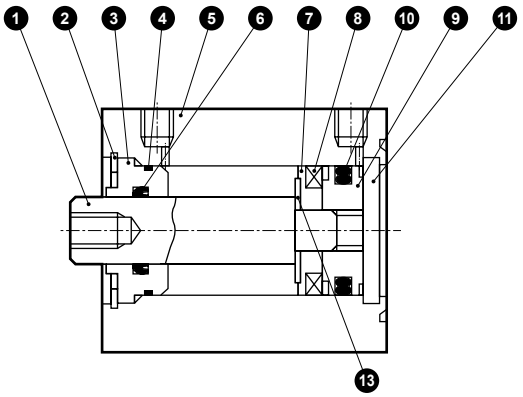

● SSD-O-12 to 25 (double acting/low speed)

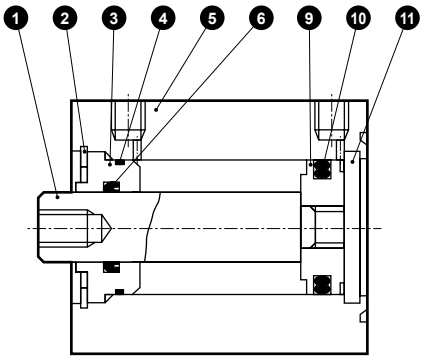

● SSD-OL-32 to 50 (double acting/low speed/with switch)

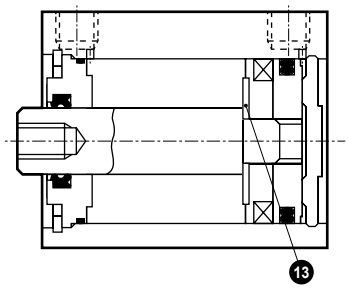

● SSD-O-32 to 50 (double acting/low speed)

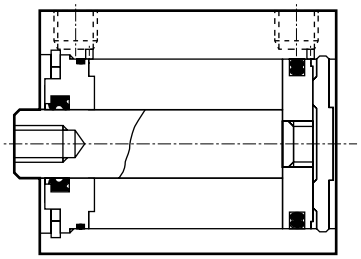

● SSD-OL-63 to 100 (double acting/low speed/with switch)

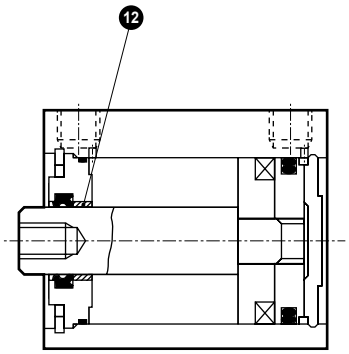

● SSD-O-63 to 100 (double acting/low speed)

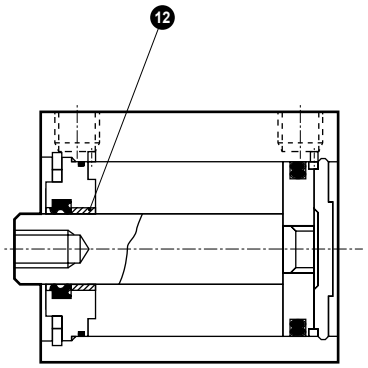

No.	Part name	Material	Remarks
1	Piston rod	ø12 to ø25: Stainless steel ø32 to ø100: Steel	ø16 to ø100: Industrial chrome plating
2	C type snap ring	Steel	Zinc phosphate
3	Rod metal	ø12 to ø50: Special aluminum ø63 to ø100: Aluminum alloy	Alumite
4	Rod metal gasket	Nitrile rubber	
5	Body	Aluminum alloy	Hard alumite
6	Rod packing	Nitrile rubber	

No.	Part name	Material	Remarks
7	Spacer	ø12, ø63 to ø100: Aluminum alloy ø16 to ø50: Special resin	ø12, ø63 to ø100: Chromate
8	Magnet	Plastic	
9	Piston	Aluminum alloy	Chromate
10	Piston packing	Nitrile rubber	
11	Cover	ø12 to ø25: Stainless steel ø32 to ø100: Aluminum alloy	ø32 to ø100: Alumite
12	Bush	Oiles drymet	ø63 to ø100
13	Spacer washer	Stainless steel	ø20 to ø50

Fluorine grease is used.

Repair parts list

Bore size (mm)	Kit No.	Repair parts No.
ø12	SSD-O-12K	❹ ❻ ❿
ø16	SSD-O-16K	
ø20	SSD-O-20K	
ø25	SSD-O-25K	
ø32	SSD-O-32K	

Bore size (mm)	Kit No.	Repair parts No.
ø40	SSD-O-40K	❹ ❻ ❿
ø50	SSD-O-50K	
ø63	SSD-O-63K	
ø80	SSD-O-80K	
ø100	SSD-O-100K	

MEMO

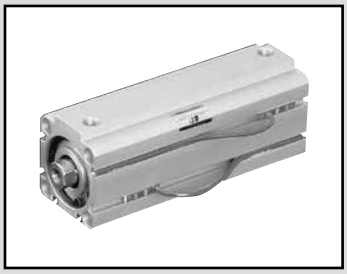

Compact cylinder/double acting/high load/low friction

SSD-KU Series

● Bore size: ø20/ø25/ø32/ø40/ø50/ø63/ø80/ø100

JIS symbol 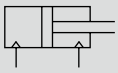

RoHS CAD

Specifications

Item		SSD-KU SSD-KUL (with switch)							
Bore size		ø20	ø25	ø32	ø40	ø50	ø63	ø80	ø100
Actuation		Double acting							
Working fluid		Compressed air							
Max. working pressure	MPa	0.7 (≈100 psi, 7 bar)							
Min. working pressure	MPa	0.03 (≈4.4 psi, 0.3 bar)							
Proof pressure	MPa	1.0 (≈150 psi, 10 bar)							
Ambient temperature	°C	5 (41°F) to 60 (140°F)							
Port size		M5		Rc1/8		Rc1/4		Rc3/8	
Stroke tolerance	mm	+2.0 0							
Working piston speed	m/s	10 to 500					10 to 300		
Cushion		Rubber cushion							
Lubrication		Not available							
Allowable absorbed energy	J	0.16	0.16	0.40	0.62	0.98	1.56	2.51	3.92
Internal leakage	ℓ/min	5						8	

Stroke length

Bore size (mm)	Standard stroke length (mm)	Max. stroke length (mm)	Min. stroke length (mm)
ø20	5, 10, 15, 20, 25, 30, 40, 50	200 *1)	5
ø25	10, 15, 20, 25, 30, 40 50, 60, 70, 80, 90, 100	300 *1)	
ø32			
ø40			
ø50			
ø63	10, 20, 30, 40, 50 60, 70, 80, 90, 100		
ø80			
ø100			

*1) The custom stroke length is available in 1 mm increments. However, the total length is the same as that of the next longer standard stroke length.
*2) Stroke length over standard to maximum is available in increments of 10.
(Example) ø20: 60, 70, 80, 90, 100
*3) Dimensions of custom stroke length (example: 64 mm stroke length) are the same as the next stroke length up (example: 70 mm stroke length).
*4) From 101 to 200 for ø20, 151 to 300 for ø25 to ø50, or 201 to 300 for ø63 to ø100, internal structure and total length are different in some products.
*5) When using the type with a switch, refer to the table below.
*6) Refer to pages 1320 and 1321 for the min. stroke length with mounting brackets LB and LB2.

Number of installed switches and min. stroke length (mm)

Switch quantity	1	2	3	4	5
Switch model No. / Bore size (mm)	T*	T*	T*	T*	T*
ø20	5	5	35	50	65
ø25	5	5	35	50	65
ø32	5	5	35	50	65
ø40	5	5	35	50	65
ø50	5	5	35	50	65
ø63	5	5	35	50	65
ø80	5	5	35	50	65
ø100	5	5	35	50	65

Note: Less than 10 mm with the 2-color display, off-delay, AC magnetic field proof, T1* or T8* switch is not available.

Switch specifications

● 1-color/2-color display/for AC magnetic field proof

Item	Proximity 2-wire				Proximity 3-wire				Reed 2-wire							Proximity 2-wire
	T1H/ T1V	T2H/T2V/ T2JH/T2JV	T2YH/ T2YV	T2WH/ T2WV	T3H/ T3V	T3PH/ T3PV	T3YH/ T3YV	T3WH/ T3WV	T0H/T0V		T5H/T5V		T8H/T8V			T2YD (*4) T2YDT
Applications	For programmable controller, relay, compact solenoid valve	Dedicated for programmable controller			For programmable controller, relay				For programmable controller, relay		For programmable controller, relay (no lamp), serial		For programmable controller, relay			Dedicated for programmable controller
Output method	-				NPN output	PNP output	NPN output	NPN output	-							
Pwr. supp. V.	-				10 to 28 VDC				-							
Load voltage	85 to 265 VAC	10 to 30 VDC		24 VDC ±10%	30 VDC or less				12/24 VDC	100/110 VAC	5/12/24 VDC	100/110 VAC	12/24 VDC	110 VAC	220 VAC	24 VDC ±10%
Load current	5 to 100 mA	5 to 20 mA (*3)			100 mA or less		50 mA or less		5 to 50 mA	7 to 20 mA	50 mA or less	20 mA or less	5 to 50 mA	7 to 20 mA	7 to 10 mA	5 to 20 mA
Indicator lamp	LED (Lit when ON)	LED (Lit when ON)	Red/green LED (Lit when ON)	Red/green LED (Lit when ON)	LED (Lit when ON)	Yellow LED (Lit when ON)	Red/green LED (Lit when ON)	Red/green LED (Lit when ON)	LED (Lit when ON)		Without indicator lamp		LED (Lit when ON)			Red/green LED (Lit when ON)
Leakage current	≤ 1 mA at 100 VAC, ≤ 2 mA at 200 VAC	1 mA or less			10 μA or less				0 mA							1 mA or less
Weight g	1 m:33 3 m:87 5 m:142	1 m:18 3 m:49 5 m:80	1 m:33 3 m:87 5 m:142	1 m:18 3 m:49 5 m:80	1 m:18 3 m:49 5 m:80		1 m:33 3 m:87 5 m:142	1 m:18 3 m:49 5 m:80	1 m:18 3 m:49 5 m:80				1 m:33 3 m:87 5 m:142			1 m:61 3 m:166 5 m:272

*1 : Refer to Ending Page 1 for detailed switch specifications and dimensions.
*2 : Switches other than the above models, such as switches with connectors, are also available. Refer to Ending Page 1.
*3 : The max. load current is 20 mA at 25°C. The current is lower than 20 mA if the operating ambient temperature around the switch is higher than 25°C. (5 to 10 mA at 60°C)
*4 : Switch for AC magnetic field (T2YD/T2YDT) cannot be used in DC magnetic field.

Theoretical thrust table

(Unit: N)

Bore size (mm)	Operating direction	Working pressure MPa 0.03	0.1	0.15	0.2	0.3	0.4	0.5	0.6	0.7
ø20	Push	9.42	31.4	47.1	62.8	94.2	1.26×10^2	1.57×10^2	1.88×10^2	2.20×10^2
	Pull	7.07	23.6	35.3	47.1	70.7	94.2	1.18×10^2	1.41×10^2	1.65×10^2
ø25	Push	14.7	49.1	73.6	98.2	1.47×10^2	1.96×10^2	2.45×10^2	2.95×10^2	3.44×10^2
	Pull	11.3	37.8	56.7	75.6	1.13×10^2	1.51×10^2	1.89×10^2	2.27×10^2	2.64×10^2
ø32	Push	24.1	80.4	1.21×10^2	1.61×10^2	2.41×10^2	3.22×10^2	4.02×10^2	4.83×10^2	5.63×10^2
	Pull	18.1	60.3	90.5	1.21×10^2	1.81×10^2	2.41×10^2	3.02×10^2	3.62×10^2	4.22×10^2
ø40	Push	37.7	1.26×10^2	1.88×10^2	2.51×10^2	3.77×10^2	5.03×10^2	6.28×10^2	7.54×10^2	8.80×10^2
	Pull	31.7	1.06×10^2	1.58×10^2	2.11×10^2	3.17×10^2	4.22×10^2	5.28×10^2	6.33×10^2	7.39×10^2
ø50	Push	58.9	1.96×10^2	2.95×10^2	3.93×10^2	5.89×10^2	7.85×10^2	9.82×10^2	1.18×10^3	1.37×10^3
	Pull	49.5	1.65×10^2	2.47×10^2	3.30×10^2	4.95×10^2	6.60×10^2	8.25×10^2	9.90×10^2	1.15×10^3
ø63	Push	93.5	3.12×10^2	4.68×10^2	6.23×10^2	9.35×10^2	1.25×10^3	1.56×10^3	1.87×10^3	2.18×10^3
	Pull	84.0	2.80×10^2	4.20×10^2	5.61×10^2	8.41×10^2	1.12×10^3	1.40×10^3	1.68×10^3	1.96×10^3
ø80	Push	1.51×10^2	5.03×10^2	7.54×10^2	1.01×10^3	1.51×10^3	2.01×10^3	2.51×10^3	3.02×10^3	3.52×10^3
	Pull	1.36×10^2	4.54×10^2	6.80×10^2	9.07×10^2	1.36×10^3	1.81×10^3	2.27×10^3	2.72×10^3	3.17×10^3
ø100	Push	2.36×10^2	7.85×10^2	1.18×10^3	1.57×10^3	2.36×10^3	3.14×10^3	3.93×10^3	4.71×10^3	5.50×10^3
	Pull	2.14×10^2	7.15×10^2	1.07×10^3	1.43×10^3	2.14×10^3	2.86×10^3	3.57×10^3	4.29×10^3	5.00×10^3

Dimensions

Same as SSD-K Series (double acting/high load). Refer to pages 1122 to 1125.

Technical data

Refer to page 306 for technical data regarding sliding resistance values.
SSD-KU Series shows a similar trend to the data of “SCM-U Series” on page 306.

How to order

Without switch (without magnet for switch)

SSD-KU - 20 ( ) - 5 ——— N - LB - I

With switch (built-in magnet for switch)

SSD-KUL - 20 ( ) - 5 - T0H - R - N - LB - I

Ⓐ Bore size

Ⓑ Port thread

Ⓒ Stroke length

Ⓓ Switch model No. *7

Ⓔ Switch quantity

Ⓕ Option *2

Ⓖ Mounting bracket *3 *4

Ⓗ Accessory *5

Precautions for model No. selection

*1 : Switches other than Ⓓ Switch model No. are also available. (Made to order)
Refer to Ending Page 1 for details.

*2 : Piston rod of ø20 and ø25 is stainless steel as standard. C type snap ring is stainless steel instead of steel. The rod end male thread nut is stainless steel.

*3 : The mounting bracket is included at shipment.

*4 : The projection dimension of piston rod WF when LB2 or FA is selected is different from that of the standard. Refer to the dimensions on pages 1109 and 1110. The number of the specified protruding dimension will be added at the end of the model No. printed on the metal plate on the body.

*5 : "I" and "Y" cannot be selected together.

*6 : Refer to Ending Page 85 for custom specifications of rod end form.

*7 : Switches are shipped with the product. Contact CKD if assembling before shipment is necessary.

[Example of model No.]

SSD-KUL-20-5-T0H-R-N

Model: Compact cylinder
High load/low friction

Ⓐ Bore size : ø20
Ⓑ Port thread : Rc thread
Ⓒ Stroke length : 5 mm
Ⓓ Switch model No. : Reed switch T0H, lead wire 1 m
Ⓔ Switch quantity : 1 on rod side
Ⓕ Option : Rod end male thread

Code	Description
Ⓐ Bore size (mm)	
20	ø20
25	ø25
32	ø32
40	ø40
50	ø50
63	ø63
80	ø80
100	ø100

Ⓑ Port thread	
Blank	Rc thread
NN	NPT thread (ø32 and over) (made-to-order product)
GN	G thread (ø32 and over) (made-to-order product)

Ⓒ Stroke length (mm)

Refer to the stroke length table on the following page.

Ⓓ Switch model No.

Axial lead wire	Radial lead wire	Contact	Voltage AC	Voltage DC	Display	Lead wire
T0H*	**T0V***	Reed	●	●	1-color display	2-wire
T5H*	**T5V***	Reed	●	●	Without indicator lamp	2-wire
T8H*	**T8V***	Reed	●	●	1-color display	2-wire
T1H*	**T1V***	Proximity	●		1-color display	2-wire
T2H*	**T2V***	Proximity		●	1-color display	2-wire
T3H*	**T3V***	Proximity		●	1-color display	3-wire
T3PH*	**T3PV***	Proximity		●	1-color display	3-wire
T2WH*	**T2WV***	Proximity		●	2-color display	2-wire
T2YH*	**T2YV***	Proximity		●	2-color display	2-wire
T3WH*	**T3WV***	Proximity		●	2-color display	3-wire
T3YH*	**T3YV***	Proximity		●	2-color display	3-wire
T2JH*	**T2JV***	Proximity		●	1-color display off-delay	2-wire
T2YD*	**-**	Proximity		●	2-color display AC magnetic field	2-wire
T2YDT*	**-**	Proximity		●	2-color display AC magnetic field	2-wire
T2HR3	**T2VR3**	Proximity		●	1-color display (bend resist lead wire specs)	2-wire

*** Lead wire length**	
Blank	1 m (standard)
3	3 m (option)
5	5 m (option)

Ⓔ Switch quantity	
R	1 on rod side
H	1 on head side
D	2

Ⓕ Option	
Blank	Rod end female thread
N	Rod end male thread
M	Piston rod material (stainless steel)

Ⓖ Mounting bracket	
LB	Axial foot
LB2	Axial foot (compact)
CB	Clevis bracket (pin and snap ring included)
CB2	Clevis bracket (compact) (pin and snap ring included)
FA	Rod side flange
FB	Head side flange

Ⓗ Accessory (available when rod end male thread "N" is selected)	
I	Rod eye
I2	Rod eye (compact)
Y	Rod clevis (pin and snap ring included)
Y2	Rod clevis (compact) (pin and snap ring included)

How to order switch

SW - T0H*

Switch model No. (Item Ⓓ above)

[Stroke length table]

Stroke length (mm)		Applicable bore size							
		ø20	ø25	ø32	ø40	ø50	ø63	ø80	ø100
Standard stroke length	5	●							
	10	●	●	●	●	●	●	●	●
	15	●	●	●	●	●			
	20	●	●	●	●	●	●	●	●
	25	●	●	●	●	●			
	30	●	●	●	●	●	●	●	●
	40	●	●	●	●	●	●	●	●
	50	●	●	●	●	●	●	●	●
	60		●	●	●	●	●	●	●
	70		●	●	●	●	●	●	●
	80		●	●	●	●	●	●	●
	90		●	●	●	●	●	●	●
	100		●	●	●	●	●	●	●
Min. stroke length (mm) *1		5							
Max. stroke length (mm)		200	300						
Custom stroke length *2		In 1 mm increments							

1 : Less than 10 mm with the 2-color display, off-delay, AC magnetic field proof, T1 or T8* switch is not available.
Refer to page 1184 for the number of installed switches and the min. stroke length.
*2 : The total length is the same as that of the next longer standard stroke length.
*3 : Refer to pages 1320 and 1321 for the min. stroke length with mounting brackets LB and LB2.

How to order mounting bracket

Bore size (mm) / Mounting bracket	ø20	ø25	ø32	ø40	ø50	ø63	ø80	ø100
Foot (LB)	SSD-LB-20	SSD-LB-25	SSD-LB-32	SSD-LB-40	SSD-LB-50	SSD-LB-63	SSD-LB-80	SSD-LB-100
Foot (LB2)	SSD-LB2-20	SSD-LB2-25	SSD-LB2-32	SSD-LB2-40	SSD-LB2-50	SSD-LB2-63	SSD-LB2-80	SSD-LB2-100
Flange (FA/FB)	SSD-FA-20	SSD-FA-25	SSD-FA-32	SSD-FA-40	SSD-FA-50	SSD-FA-63	SSD-FA-80	SSD-FA-100
Clevis bracket (CB)	SSD-CB-20	SSD-CB-25	SSD-CB-32	SSD-CB-40	SSD-CB-50	SSD-CB-63	SSD-CB-80	SSD-CB-100
Clevis bracket (CB2)	SSD-CB2-20	SSD-CB2-25	SSD-CB2-32	SSD-CB2-40	SSD-CB2-50	SSD-CB2-63	SSD-CB2-80	SSD-CB2-100

*1: The foot mounting bracket is provided as 2 pcs./set.

Cylinder weight table (the weight of the switches is when there are 2 cylinder switches.)

(Unit: g)

Stroke length (mm)	5		10		15		20		25		30		40		50		60		70		80		90		100	
Bore size (mm)	No switch	Switch	No switch	Switch	No switch	Switch	No switch	Switch	No switch	Switch	No switch	Switch	No switch	Switch	No switch	Switch	No switch	Switch	No switch	Switch	No switch	Switch	No switch	Switch	No switch	Switch
ø20	75	150	88	163	101	176	113	188	126	201	138	213	163	238	188	263	213	288	238	313	263	338	288	363	313	388
ø25	—	—	118	209	134	225	150	241	165	256	182	273	214	305	246	337	278	369	310	401	342	433	374	465	406	497
ø32	—	—	188	302	209	323	231	345	253	367	275	389	318	432	361	475	404	518	447	561	490	604	533	647	576	690
ø40	—	—	263	406	290	433	316	459	342	485	369	512	422	565	475	618	528	671	581	724	634	777	687	830	740	883
ø50	—	—	425	619	467	661	510	704	553	747	594	788	678	872	762	956	846	1040	930	1124	1014	1208	1098	1292	1182	1376
ø63	—	—	617	896	—	—	727	1006	—	—	838	1117	948	1227	1058	1337	1168	1447	1278	1557	1388	1667	1498	1777	1608	1887
ø80	—	—	1101	1514	—	—	1274	1687	—	—	1448	1861	1621	2034	1794	2207	1967	2380	2140	2553	2313	2726	2486	2899	2659	3072
ø100	—	—	1660	2227	—	—	1888	2455	—	—	2115	2682	2343	2910	2571	3138	2799	3366	3027	3594	3255	3822	3483	4050	3711	4278

Stroke length (mm)	110		120		130		140		150		160		170		180		190		200	
Bore size (mm)	No switch	Switch	No switch	Switch	No switch	Switch	No switch	Switch	No switch	Switch	No switch	Switch	No switch	Switch	No switch	Switch	No switch	Switch	No switch	Switch
ø20	338	413	363	438	388	463	413	488	438	513	463	538	488	563	513	588	538	613	563	638
ø25	438	529	470	561	502	593	534	625	566	657	598	689	630	721	662	753	694	785	726	817
ø32	619	733	662	776	705	819	748	862	791	905	833	947	876	990	919	1033	962	1076	1005	1119
ø40	793	936	846	989	899	1042	952	1095	1005	1148	1058	1201	1111	1254	1164	1307	1217	1360	1270	1413
ø50	1266	1460	1350	1544	1434	1628	1518	1712	1602	1796	1700	1894	1785	1979	1870	2064	1955	2149	2040	2234
ø63	1718	1997	1828	2107	1938	2217	2048	2327	2158	2437	2268	2547	2378	2657	2488	2767	2598	2877	2708	2987
ø80	2832	3245	3005	3418	3178	3591	3351	3764	3524	3937	3697	4110	3870	4283	4043	4456	4216	4629	4389	4802
ø100	3939	4506	4167	4734	4395	4962	4623	5190	4851	5418	5079	5646	5307	5874	5535	6102	5763	6830	5991	6558

Stroke length (mm)	210		220		230		240		250		260		270		280		290		300	
Bore size (mm)	No switch	Switch	No switch	Switch	No switch	Switch	No switch	Switch	No switch	Switch	No switch	Switch	No switch	Switch	No switch	Switch	No switch	Switch	No switch	Switch
ø25	769	849	801	881	833	913	865	945	897	977	929	1009	961	1041	993	1073	1025	1105	1057	1137
ø32	1048	1162	1091	1205	1134	1248	1177	1291	1220	1334	1263	1377	1306	1420	1349	1463	1392	1506	1435	1549
ø40	1323	1466	1376	1519	1429	1572	1482	1625	1535	1678	1588	1731	1641	1784	1694	1837	1747	1890	1800	1943
ø50	2125	2319	2210	2404	2295	2489	2380	2574	2465	2659	2550	2744	2635	2829	2720	2914	2805	2999	2890	3084
ø63	2817	3096	2927	3206	3037	3316	3147	3426	3257	3536	3367	3646	3477	3756	3587	3866	3697	3976	3807	4086
ø80	4561	4974	4734	5147	4907	5320	5080	5493	5253	5666	5426	5839	5599	6012	5772	6185	5945	6358	6118	6531
ø100	6220	6787	6448	7015	6676	7243	6904	7471	7132	7699	7360	7927	7588	8155	7816	8383	8044	8611	8272	8839

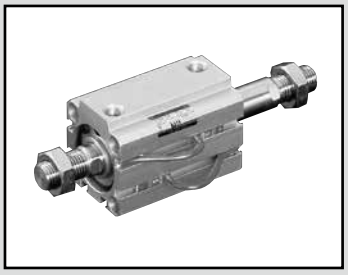

Compact cylinder double acting/double rod

SSD-D Series

● Bore size: ø12/ø16/ø20/ø25/ø32/ø40/ø50/ø63/ø80/ø100/ø120/ø140/ø160

JIS symbol

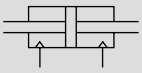

RoHS CAD

Specifications

Item	SSD-D SSD-DL (with switch)												
Bore size mm	ø12	ø16	ø20	ø25	ø32	ø40	ø50	ø63	ø80	ø100	ø125	ø140	ø160
Actuation	Double acting												
Working fluid	Compressed air												
Max. working pressure MPa	1.0 (≈150 psi, 10 bar)												
Min. working pressure MPa	0.15 (≈22 psi, 1.5 bar)							0.1 (≈15 psi, 1 bar)			0.05 (≈7.3 psi, 0.5 bar)		
Proof pressure MPa	1.6 (≈230 psi, 16 bar)												
Ambient temperature °C	-10 (14°F) to 60 (140°F) (no freezing)												
Port size	M5				Rc1/8		Rc1/4		Rc3/8				
Stroke tolerance mm	+1.0 0										+2.0 0		
Working piston speed mm/s	50 to 500							50 to 300					
Cushion	None										Rubber cushion		
Lubrication	Not required (use turbine oil ISO VG32 if necessary for lubrication)												
Allowable absorbed energy J	0.004	0.01	0.016	0.021	0.025	0.092	0.1	0.12	0.27	0.56	6.52	6.52	7.78

Stroke length

Bore size (mm)	Standard stroke length (mm)	Max. stroke length (mm)	Min. stroke length (mm)
ø12	5, 10, 15, 20, 25, 30	30	1
ø16			
ø20			
ø25	5, 10, 15, 20 25, 30, 40, 50	50	
ø32			
ø40			
ø50			
ø63	5, 10, 20, 30, 40, 50	50	
ø80			
ø100			
ø125	10, 20, 30, 40, 50 60, 70, 80, 90, 100	300	10
ø140			
ø160			

*1: Total length when using a custom stroke length is different between ø12 to ø100 and ø125 to ø160. Please be careful.
[ø12 to ø100]
The dimensions of the total length with the custom stroke length are the handled same as the next longer standard stroke length.
[ø125 to ø160]
Total length dimension with custom stroke length is handled as the custom stroke dedicated length.
*2: When using the type with switch, refer to the table below.
*3: Refer to pages 1320 and 1321 for the min. stroke length with mounting brackets LB and LB2.

Number of installed switches and min. stroke length (mm)

Switch quantity	1	2	3	4	5
Switch model No. / Bore size (mm)	T*	T*	T*	T*	T*
ø12	5	5	25	-	-
ø16	5	5	25	-	-
ø20	5	5	-	-	-
ø25	5	5	35	50	-
ø32	5	5	35	50	-
ø40	5	5	35	50	-
ø50	5	5	35	50	-
ø63	5	5	35	55	-
ø80	5	5	35	55	-
ø100	5	5	35	55	-
ø125	10	10	40	55	70
ø140	10	10	40	55	70
ø160	10	10	40	55	70

Note: Less than 10 mm with the 2-color display, off-delay, AC magnetic field proof, T1* or T8* switch is not available.

Switch specifications

● 1-color/2-color display/for AC magnetic field proof

Item	Proximity 2-wire				Proximity 3-wire				Reed 2-wire							Proximity 2-wire
	T1H/ T1V	T2H/T2V/ T2JH/T2JV	T2YH/ T2YV	T2WH/ T2WV	T3H/ T3V	T3PH/ T3PV	T3YH/ T3YV	T3WH/ T3WV	T0H/T0V		T5H/T5V		T8H/T8V			T2YD (*4) T2YDT
Applications	For programmable controller, relay, compact solenoid valve	Dedicated for programmable controller			For programmable controller, relay				For programmable controller, relay		For programmable controller, relay (no lamp), serial		For programmable controller, relay			Dedicated for programmable controller
Output method	-				NPN output	PNP output	NPN output	NPN output	-							
Pwr. supp. V.	-				10 to 28 VDC				-							
Load voltage	85 to 265 VAC	10 to 30 VDC		24 VDC ±10%	30 VDC or less				12/24 VDC	100/110 VAC	5/12/24 VDC	100/110 VAC	12/24 VDC	110 VAC	220 VAC	24 VDC ±10%
Load current	5 to 100 mA	5 to 20 mA (*3)			100 mA or less		50 mA or less		5 to 50 mA	7 to 20 mA	50 mA or less	20 mA or less	5 to 50 mA	7 to 20 mA	7 to 10 mA	5 to 20 mA
Indicator lamp	LED (Lit when ON)	LED (Lit when ON)	Red/green LED (Lit when ON)	Red/green LED (Lit when ON)	LED (Lit when ON)	Yellow LED (Lit when ON)	Red/green LED (Lit when ON)	Red/green LED (Lit when ON)	LED (Lit when ON)		Without indicator lamp		LED (Lit when ON)			Red/green LED (Lit when ON)
Leakage current	≤ 1 mA at 100 VAC, ≤ 2 mA at 200 VAC	1 mA or less			10 μA or less				0 mA							1 mA or less
Weight g	1 m:33 3 m:87 5 m:142	1 m:18 3 m:49 5 m:80	1 m:33 3 m:87 5 m:142	1 m:18 3 m:49 5 m:80	1 m:18 3 m:49 5 m:80		1 m:33 3 m:87 5 m:142	1 m:18 3 m:49 5 m:80	1 m:18 3 m:49 5 m:80				1 m:33 3 m:87 5 m:142			1 m:61 3 m:166 5 m:272

*1 : Refer to Ending Page 1 for detailed switch specifications and dimensions.
*2 : Switches other than the above models, such as switches with connectors, are also available. Refer to Ending Page 1.
*3 : The max. load current is 20 mA at 25°C. The current is lower than 20 mA if the operating ambient temperature around the switch is higher than 25˚C. (5 to 10 mA at 60°C)
*4 : Switch for AC magnetic field (T2YD/T2YDT) cannot be used in DC magnetic field.

Cylinder weight table (the weight of the switches is when there are 2 cylinder switches.)

● ø12 to ø100

(Unit: g)

Stroke length (mm)	5		10		15		20		25		30		40		50	
Bore size (mm)	No switch	Switch	No switch	Switch	No switch	Switch	No switch	Switch	No switch	Switch	No switch	Switch	No switch	Switch	No switch	Switch
ø12	52	105	60	105	69	115	77	124	86	134	95	147	-	-	-	-
ø16	74	133	85	133	95	144	106	156	117	168	128	177	-	-	-	-
ø20	131	187	143	222	161	238	179	254	196	269	214	285	-	-	-	-
ø25	147	238	162	253	178	269	194	285	210	301	226	316	257	348	288	379
ø32	184	299	230	344	275	390	322	436	366	481	413	527	507	617	601	707
ø40	283	426	310	453	336	479	363	506	390	533	416	569	469	612	522	665
ø50	458	652	508	702	558	751	608	803	658	851	708	901	808	1001	911	1105
ø63	827	953	902	1266	-	-	1052	1416	-	-	1202	1566	1353	1717	1503	1867
ø80	1491	1421	1608	1538	-	-	1841	2294	-	-	2074	2527	2308	2771	2541	3004
ø100	2314	2941	2483	3105	-	-	2820	3402	-	-	3158	3770	3495	4097	3833	4425

Cylinder weight table (the weight of the switches is when there are 2 cylinder switches.)

● ø125 to ø160

(Unit: kg)

Stroke length (mm) / Bore size (mm)	10		20		30		40		50		60		70		80		90		100	
	Without switch	With switch	Without switch	With switch	Without switch	With switch	Without switch	With switch	Without switch	With switch	Without switch	With switch	Without switch	With switch	Without switch	With switch	Without switch	With switch	Without switch	With switch
ø125	4.64	4.74	4.98	5.08	5.32	5.42	5.66	5.76	6	6.1	6.64	6.44	6.68	6.78	7.02	7.12	7.36	7.46	7.7	7.8
ø140	6.62	6.73	7	7.11	7.93	7.5	7.77	7.88	8.15	8.26	8.54	8.65	8.92	9.03	9.3	9.41	9.68	9.79	10.07	10.18
ø160	9.1	9.22	9.58	9.7	10.06	10.18	10.54	10.66	11.02	11.14	11.5	11.62	11.97	12.09	12.45	12.57	12.93	13.05	13.41	13.53

Theoretical thrust table

(Unit: N)

Bore size (mm)	Operating direction	Working pressure MPa											
		0.05	0.1	0.15	0.2	0.3	0.4	0.5	0.6	0.7	0.8	0.9	1.0
ø12	Pull	-	-	12.7	17.0	25.4	33.9	42.4	50.9	59.4	67.9	76.3	84.8
ø16	Pull	-	-	22.6	30.2	45.2	60.3	75.4	90.5	1.06×10^2	1.21×10^2	1.36×10^2	1.51×10^2
ø20	Pull	-	-	35.3	47.1	70.7	94.2	1.18×10^2	1.41×10^2	1.65×10^2	1.88×10^2	2.12×10^2	2.36×10^2
ø25	Pull	-	-	56.7	75.6	1.13×10^2	1.51×10^2	1.89×10^2	2.27×10^2	2.64×10^2	3.02×10^2	3.40×10^2	3.78×10^2
ø32	Pull	-	-	90.5	1.21×10^2	1.81×10^2	2.41×10^2	3.02×10^2	3.62×10^2	4.22×10^2	4.83×10^2	5.43×10^2	6.03×10^2
ø40	Pull	-	-	1.58×10^2	2.11×10^2	3.17×10^2	4.22×10^2	5.28×10^2	6.33×10^2	7.39×10^2	8.44×10^2	9.50×10^2	1.06×10^3
ø50	Pull	-	-	2.47×10^2	3.30×10^2	4.95×10^2	6.60×10^2	8.25×10^2	9.90×10^2	1.15×10^3	1.32×10^3	1.48×10^3	1.65×10^3
ø63	Pull	-	2.80×10^2	4.20×10^2	5.61×10^2	8.41×10^2	1.12×10^3	1.40×10^3	1.68×10^3	1.96×10^3	2.24×10^3	2.52×10^3	2.80×10^3
ø80	Pull	-	4.54×10^2	6.80×10^2	9.07×10^2	1.36×10^3	1.81×10^3	2.27×10^3	2.72×10^3	3.17×10^3	3.63×10^3	4.08×10^3	4.54×10^3
ø100	Pull	-	7.15×10^2	1.07×10^3	1.43×10^3	2.14×10^3	2.86×10^3	3.57×10^3	4.29×10^3	5.00×10^3	5.72×10^3	6.43×10^3	7.15×10^3
ø125	Pull	5.65×10^2	1.13×10^3	1.70×10^3	2.26×10^3	3.39×10^3	4.52×10^3	5.65×10^3	6.79×10^3	7.92×10^3	9.05×10^3	1.02×10^4	1.13×10^4
ø140	Pull	7.21×10^2	1.44×10^3	2.16×10^3	2.89×10^3	4.33×10^3	5.77×10^3	7.22×10^3	8.66×10^3	1.01×10^4	1.15×10^4	1.30×10^4	1.44×10^4
ø160	Pull	9.42×10^2	1.88×10^3	2.83×10^3	3.77×10^3	5.65×10^3	7.54×10^3	9.42×10^3	1.13×10^4	1.32×10^4	1.51×10^4	1.70×10^4	1.88×10^4

SCP*3
CMK2
CMA2
SCM
SCG
SCA2
SCS2
CKV2
CAV2/COVP/N2
SSD2
SSG
SSD
CAT
MDC2
MVC
SMG
MSD/MSDG
FC*
STK
SRL3
SRG3
SRM3
SRT3
MRL2
MRG2
SM-25
ShkAbs
FJ
FK
Spd Contr
Ending

How to order

Without switch (without magnet for switch)

SSD-D - 12 ◯ - 5 ———— N - LB - I

With switch (built-in magnet for switch)

SSD-DL - 12 ◯ - 5 - T0H - R - N - LB - I

- Ⓐ Bore size
- Ⓑ Port thread
- Ⓒ Stroke length
- Ⓓ Switch model No. *1 *2 *9
- Ⓔ Switch quantity
- Ⓕ Option *3
- Ⓖ Mounting bracket *4 *5 *10
- Ⓗ Accessory *6

Code	Description
Ⓐ Bore size (mm)	
12	ø12
16	ø16
20	ø20
25	ø25
32	ø32
40	ø40
50	ø50
63	ø63
80	ø80
100	ø100
125	ø125
140	ø140
160	ø160

Ⓑ Port thread	
Blank	Rc thread
NN	NPT thread (ø32 and over) (made-to-order product)
GN	G thread (ø32 and over) (made-to-order product)

Ⓒ Stroke length (mm)

Refer to the stroke length table on the following page.

Ⓓ Switch model No.

Axial lead wire	Radial lead wire	Contact	Voltage AC	Voltage DC	Display	Lead wire
TOH*	T0V*	Reed	●	●	1-color display	2-wire
T5H*	T5V*	Reed	●	●	Without indicator lamp	2-wire
T8H*	T8V*	Reed	●	●	1-color display	2-wire
T1H*	T1V*	Proximity	●		1-color display	2-wire
T2H*	T2V*	Proximity		●	1-color display	2-wire
T3H*	T3V*	Proximity		●	1-color display	3-wire
T3PH*	T3PV*	Proximity		●	1-color display	3-wire
T2WH*	T2WV*	Proximity		●	2-color display	2-wire
T2YH*	T2YV*	Proximity		●	2-color display	2-wire
T3WH*	T3WV*	Proximity		●	2-color display	3-wire
T3YH*	T3YV*	Proximity		●	2-color display	3-wire
T2JH*	T2JV*	Proximity		●	1-color display off-delay	2-wire
T2YD*	-	Proximity		●	2-color display AC magnetic field	2-wire
T2YDT*	-	Proximity		●	2-color display AC magnetic field	2-wire
T2HR3	T2VR3	Proximity		●	1-color display (bend resist lead wire specs)	2-wire

*** Lead wire length**	
Blank	1 m (standard)
3	3 m (option)
5	5 m (option)

Ⓔ Switch quantity	
R	1 on rod side
H	1 on head side
D	2

Ⓕ Option

Bore size (ø)		12	16	20	25	32	40	50	63	80	100	125	140	160
Blank	Rod end female thread	●	●	●	●	●	●	●	●	●	●	●	●	●
N	Rod end male thread	●	●	●	●	●	●	●	●	●	●	●	●	●
P6	Cu/PTFE free specs	Supported as standard							●	●	●			
M	Piston rod material (S.S.)	●	●	●	●	●	●	●	●	●	●			

Ⓖ Mounting bracket	
LB	Axial foot
LB2	Axial foot (compact)
FA	Rod side flange

Ⓗ Accessory (available when rod end male thread "N" is selected)	
I	Rod eye
I2	Rod eye (compact)
Y	Rod clevis (pin and snap ring included)
Y2	Rod clevis (compact) (pin and snap ring included)

⚠ Precautions for model No. selection

*1 : Switches other than Ⓓ Switch model No. are also available. (Made to order) Refer to Ending Page 1 for details.
2 : AC magnetic field proof switch and T8 switch cannot be installed on ø12 and ø16.
*3 : Piston rod of ø12 to ø25 is stainless steel as standard. C type snap ring is stainless steel instead of steel. The rod end male thread nut is stainless steel.
*4 : The mounting bracket is included at shipment.
*5 : The projection dimension of piston rod WF when LB2 or FA is selected is different from that of the standard. Refer to the dimensions on pages 1109 and 1110. The number of the specified protruding dimension will be added at the end of the model No. printed on the metal plate on the body.
*6 : Two units are included when "I" or "Y" is selected. One unit each is included when "IY" is selected.
*7 : Refer to Ending Page 85 for custom specifications of rod end form.
*8 : Refer to pages 1086 and 1091 for combinations of variations/options.
*9 : Switches are shipped with the product. Contact CKD if assembling before shipment is necessary.
*10 : Only LB and CB are available for ø125 to ø160.

[Example of model No.]

SSD-DL-12-5-T0H-R-N

Model: Compact cylinder double acting/double rod

- Ⓐ Bore size : ø12 mm
- Ⓑ Port thread : Rc thread
- Ⓒ Stroke length : 5 mm
- Ⓓ Switch model No. : Reed T0H switch
  - · Lead wire length 1 m
- Ⓔ Switch quantity : 1 on rod side
- Ⓕ Option : Rod end male thread

How to order switch

SW - T0H

Switch model No. (Item Ⓓ above)

[Stroke length table]

Stroke length (mm)		Applicable bore size												
		ø12	ø16	ø20	ø25	ø32	ø40	ø50	ø63	ø80	ø100	ø125	ø140	ø160
Standard stroke length	5	●	●	●	●	●	●	●	●	●	●			
	10	●	●	●	●	●	●	●	●	●	●	●	●	●
	15	●	●	●	●	●	●	●						
	20	●	●	●	●	●	●	●	●	●	●	●	●	●
	25	●	●	●	●	●	●	●						
	30	●	●	●	●	●	●	●	●	●	●	●	●	●
	40				●	●	●	●	●	●	●	●	●	●
	50				●	●	●	●	●	●	●	●	●	●
	60											●	●	●
	70											●	●	●
	80											●	●	●
	90											●	●	●
	100											●	●	●
Min. stroke length (mm) *1		1										10		
Max. stroke length (mm)		30			50							300		
Custom stroke length *2		In 1 mm increments												

1 : Less than 5 mm with 1-color display switch and less than 10 mm with the 2-color display, off-delay, AC magnetic field proof, T1 or T8* switch are not available.
Refer to page 1188 for the number of installed switches and the min. stroke length.

*2 : Total length when using a custom stroke length is different between ø12 to ø100 and ø125 to ø160 as below.
Please be careful.
[ø12 to ø100]
The dimensions of the total length with the custom stroke length are the handled same as the next longer standard stroke length.
[ø125 to ø160]
Total length dimension with custom stroke length is handled as the custom stroke dedicated length.

*3 : Refer to pages 1320 and 1321 for the min. stroke length with mounting brackets LB and LB2.

How to order mounting bracket

Bore size (mm) / Mounting bracket	ø12	ø16	ø20	ø25	ø32	ø40	ø50
Foot (LB)	SSD-LB-12	SSD-LB-16	SSD-LB-20	SSD-LB-25	SSD-LB-32	SSD-LB-40	SSD-LB-50
Foot (LB2)	SSD-LB2-12	SSD-LB2-16	SSD-LB2-20	SSD-LB2-25	SSD-LB2-32	SSD-LB2-40	SSD-LB2-50
Flange (FB)	SSD-FA-12	SSD-FA-16	SSD-FA-20	SSD-FA-25	SSD-FA-32	SSD-FA-40	SSD-FA-50

Bore size (mm) / Mounting bracket	ø63	ø80	ø100	ø125	ø140	ø160	
Foot (LB)	SSD-LB-63	SSD-LB-80	SSD-LB-100	SSD-LB-125	SSD-LB-140	SSD-LB-160	
Foot (LB2)	SSD-LB2-63	SSD-LB2-80	SSD-LB2-100	-	-	-	
Flange (FB)	SSD-FA-63	SSD-FA-80	SSD-FA-100	-	-	-	

*1: The foot mounting bracket is provided as 2 pcs./set.

Internal structure and parts list

● SSD-DL-12 to 50 (double acting/double rod/with switch)

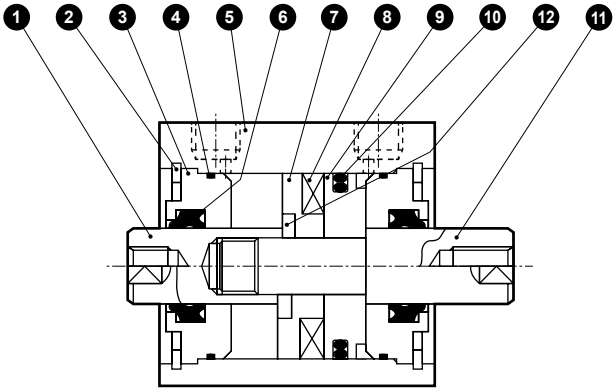

● SSD-D-12 to 50 (double acting/double rod)

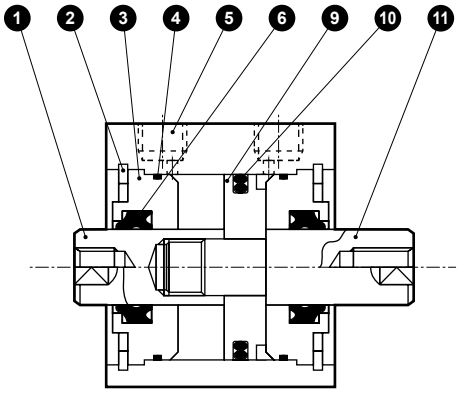

No.	Part name	Material	Remarks
1	Piston rod Ⓐ	ø12 to ø25: Stainless steel ø32 to ø50: Steel	ø16 to ø50: Industrial chrome plating
2	C type snap ring	Steel	Zinc phosphate
3	Rod metal	Special aluminum	Alumite
4	Rod metal gasket	Nitrile rubber	
5	Body	Aluminum alloy	Hard alumite
6	Rod packing	Nitrile rubber	
7	Spacer	ø12, ø20, ø32, ø40: Aluminum alloy ø16, ø25, ø50: Special resin	ø12, 20, 32, 40: Chromate

No.	Part name	Material	Remarks
8	Magnet	Plastic	
9	Piston	Aluminum alloy	Chromate
10	Piston packing	Nitrile rubber	
11	Piston rod Ⓑ	ø12 to ø25: Stainless steel ø32 to ø50: Steel	ø16 to ø50: Industrial chrome plating
12	Spacer washer	Stainless steel	ø25, 50

Repair parts list

Bore size (mm)	Kit No.	Repair parts No.
ø12	SSD-D-12K	❹ ❻ ❿
ø16	SSD-D-16K	
ø20	SSD-D-20K	
ø25	SSD-D-25K	
ø32	SSD-D-32K	
ø40	SSD-D-40K	
ø50	SSD-D-50K	

Internal structure and parts list

● SSD-DL-63 to 100 (double acting/double rod/with switch)

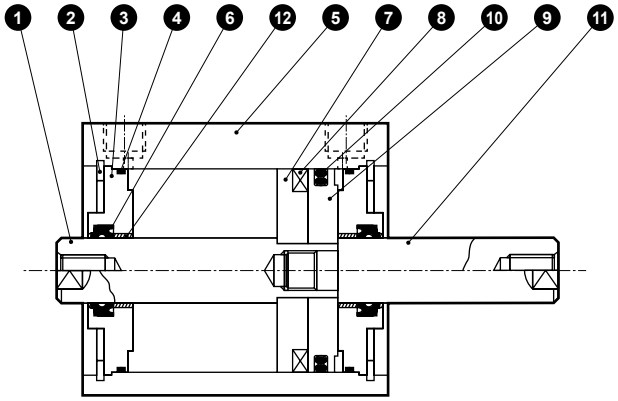

● SSD-D-63 to 100 (double acting/double rod)

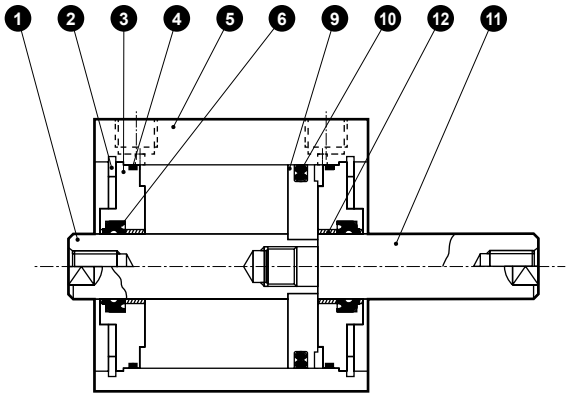

No.	Part name	Material	Remarks	No.	Part name	Material	Remarks
1	Piston rod Ⓐ	Steel	Industrial chrome plating	7	Spacer	Aluminum alloy	Chromate
2	C type snap ring	Steel	Zinc phosphate	8	Magnet	Plastic	
3	Rod metal	Aluminum alloy	Alumite	9	Piston	Aluminum alloy	Chromate
4	Rod metal gasket	Nitrile rubber		10	Piston packing	Nitrile rubber	
5	Body	Aluminum alloy	Hard alumite	11	Piston rod Ⓑ	Steel	Industrial chrome plating
6	Rod packing	Nitrile rubber		12	Bush	Oiles drymet	*1

*1: Material is steel for copper and PTFE free specifications.

Repair parts list

Bore size (mm)	Kit No.	Repair parts No.
ø63	SSD-D-63K	❹ ❻ ❿
ø80	SSD-D-80K	
ø100	SSD-D-100K	

SCP*3
CMK2
CMA2
SCM
SCG
SCA2
SCS2
CKV2
CAV2/COVP/N2
SSD2
SSG
SSD
CAT
MDC2
MVC
SMG
MSD/MSDG
FC*
STK
SRL3
SRG3
SRM3
SRT3
MRL2
MRG2
SM-25
ShkAbs
FJ
FK
Spd Contr
Ending

Internal structure and parts list

● SSD-DL-125 to 160 (double acting/double rod/with switch)

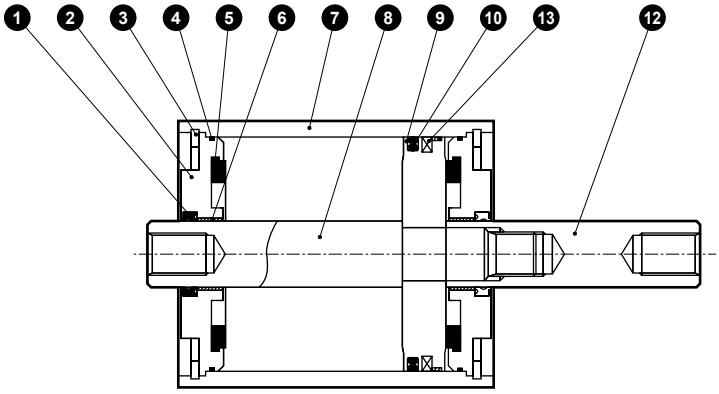

● SSD-D-125 to 160 (double acting/double rod)

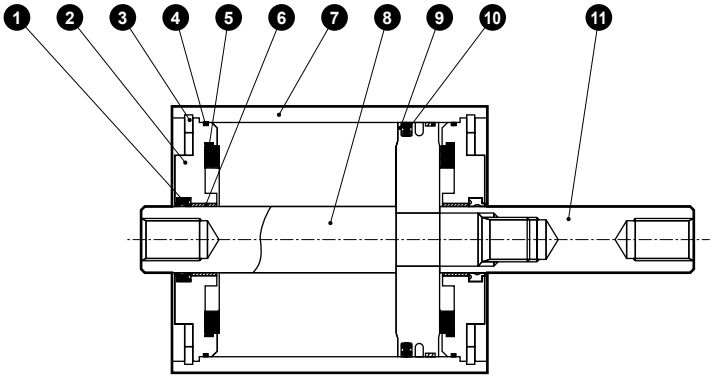

No.	Part name	Material	Remarks	No.	Part name	Material	Remarks
1	Rod packing	Nitrile rubber		8	Piston rod Ⓐ	Steel	Industrial chrome plating
2	Rod metal	Aluminum die-casting	Chromate	9	Piston	Aluminum die-casting	
3	C type snap ring	Steel	Zinc phosphate	10	Piston packing	Nitrile rubber	
4	Metal gasket	Nitrile rubber		11	Piston rod Ⓑ	Steel	Industrial chrome plating
5	Cushion rubber	Urethane rubber		12	Magnet	Rubber	SSD-DL only
6	Bush	Oiles drymet					
7	Body	Aluminum alloy	Hard alumite				

Repair parts kit

Bore size (mm)	Kit No.	Repair parts No.
ø125	SSD-D-125K	❶ ❹ ❺ ❿
ø140	SSD-D-140K	
ø160	SSD-D-160K	

*1: Specify the kit No. when placing an order.

MEMO

SCP*3
CMK2
CMA2
SCM
SCG
SCA2
SCS2
CKV2
CAV2/COVP/N2
SSD2
SSG
SSD
CAT
MDC2
MVC
SMG
MSD/MSDG
FC*
STK
SRL3
SRG3
SRM3
SRT3
MRL2
MRG2
SM-25
ShkAbs
FJ
FK
Spd Contr
Ending

Dimensions

● SSD-DL-12 to 25 (with switch)

ø12/ø16

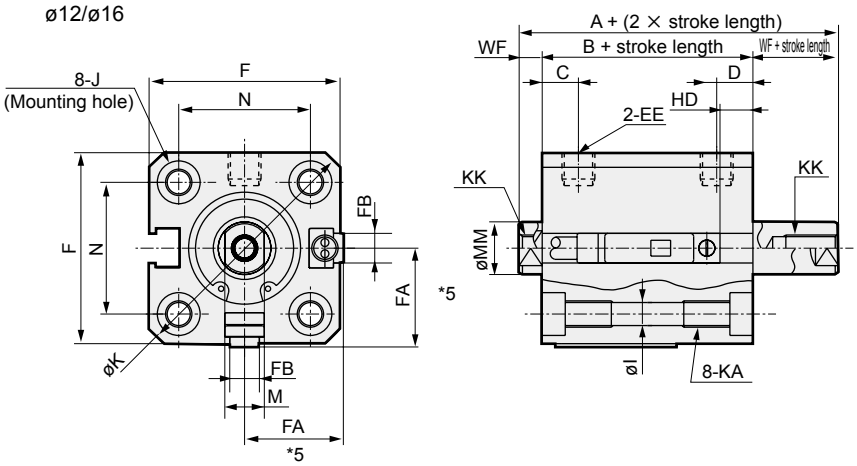

● Rod end male thread

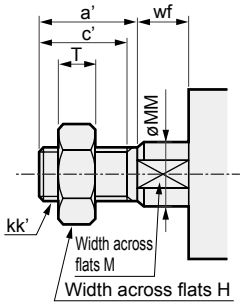

ø20/ø25

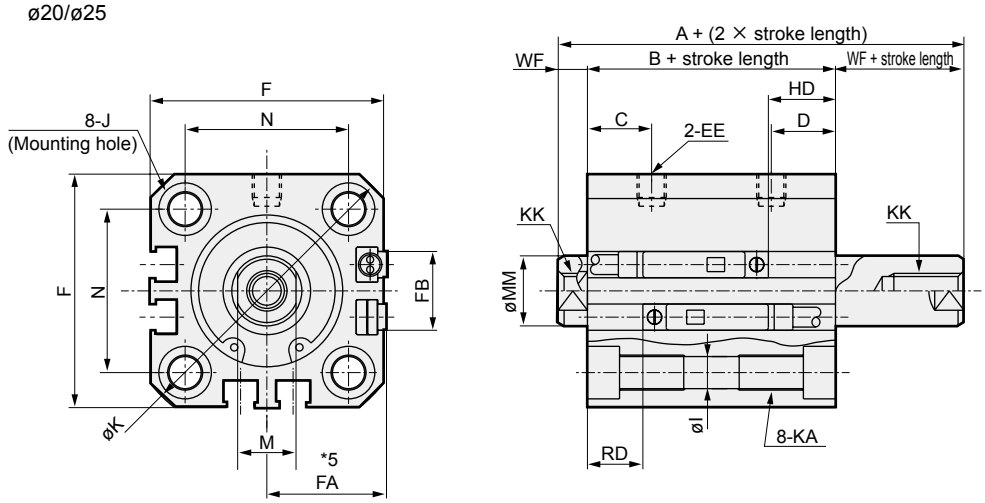

Note: The positions for the left and right widths across flats are unspecified.

Code / Bore size (mm)	Common dimensions with switch																
	A *1	B *1	C	D	EE	F	FA *5	FB	I	J	K	KA	KK	M	MM	N	WF
ø12	34	27	5.5	5.5	M5	25	13(16.5)	4.5	3.5	6.5 spot face depth 3.5	32	M4 depth 7	M3 depth 6	5	6	15.5	3.5
ø16	34	27	5.5	5.5	M5	29	15(18.5)	4.5	3.5	6.5 spot face depth 3.5	38	M4 depth 7	M4 depth 8	6	8	20	3.5
ø20	45	36	8	8	M5	36	18.5(22)	12.5	5.5	9 spot face depth 5.5	47	M6 depth 11	M5 depth 7	8	10	25.5	4.5
ø25	51	41	11	11	M5	40	20.5(24)	13.5	5.5	9 spot face depth 5.5	51	M6 depth 11	M6 depth 12	10	12	28	5

Switch dimensions / Bore size (mm)	Reed T0H/T0V, T5H/T5V		Proximity T2H/T2V, T3H/T3V T2WH/T2WV, T3WH/T3WV	
	HD *2	RD *2	HD *2	RD *2
ø12	5	2.5	5	2.5
ø16	5	2	5	2
ø20	9.5	6.5	9.5	6.5
ø25	11.5	9.5	11.5	9.5

- *1: To calculate A+ (2 x stroke length), B+ stroke length or WF+ stroke length when using a custom stroke length, apply the next longer standard stroke length (instead of the custom stroke length) to the stroke length value. Left and right projection dimensions of rod differ.
  (Example) If the custom stroke length is 7 mm, apply the standard stroke length of 10 mm.
- *2 : HD and RD dimensions for 5 mm stroke length differ from these dimensions according to the setting.
- *3: Refer to page 1312 for HD and RD dimensions of the 2-color display, off-delay, AC magnetic field proof, T1* and T8* switches.
- *4: Refer to page 1312 for the protruding dimensions of the 2-color display, off-delay, AC magnetic field proof, T1* and T8* switches.
- *5 : Dimensions in ( ) of FA are for the radial lead wire.
- *6: For dimensions of individual accessories, refer to pages 1108 to 1115.

Dimensions of rod end male thread

Code / Bore size (mm)	a'	c'	H	kk'	M	MM	T	wf
ø 12	10.5	9	8	M5	5	6	3.2	3.5
ø 16	12	10	10	M6	6	8	3.6	3.5
ø 20	14	12	13	M8	8	10	5	4.5
ø 25	17.5	15	17	M10×1.25	10	12	6	5

Dimensions

● SSD-D-12 to 25 (without switch)

ø12/ø16

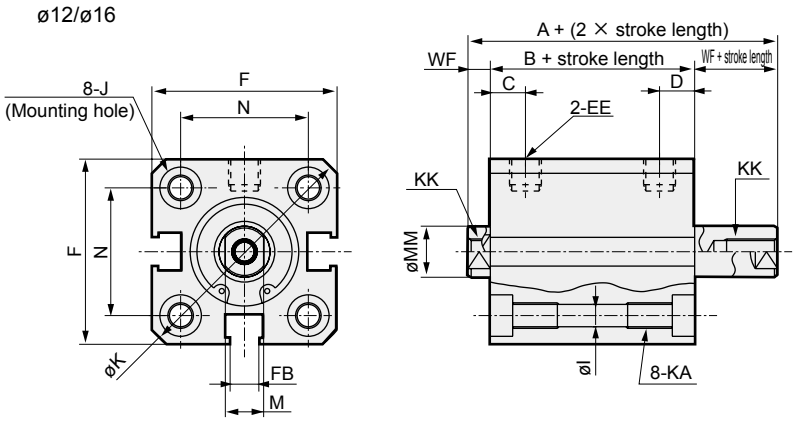

● Rod end male thread

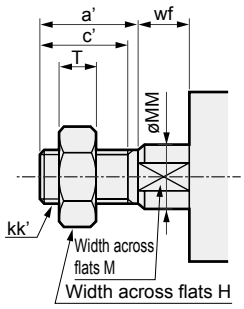

ø20/ø25

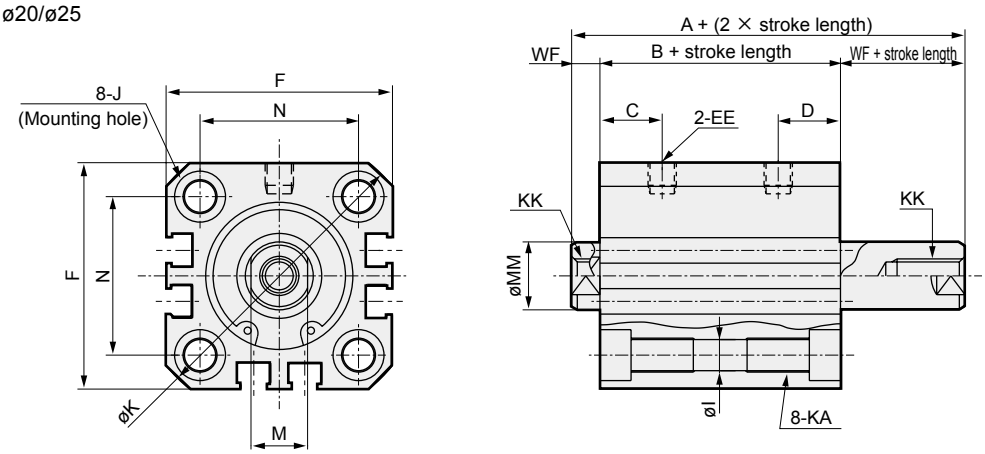

Note: The positions for the left and right widths across flats are unspecified.

Code / Bore size (mm)	Dimensions without switch and common dimensions															
	A *1	B *1	C	D	EE	F	FB	I	J	K	KA	KK	M	MM	N	WF
ø12	29	22	5.5	5.5	M5	25	4.5	3.5	6.5 spot face depth 3.5	32	M4 depth 7	M3 depth 6	5	6	15.5	3.5
ø16	29	22	5.5	5.5	M5	29	4.5	3.5	6.5 spot face depth 3.5	38	M4 depth 7	M4 depth 8	6	8	20	3.5
ø20	35	26	8	8	M5	36	12.5	5.5	9 spot face depth 5.5	47	M6 depth 11	M5 depth 7	8	10	25.5	4.5
ø25	41	31	11	11	M5	40	13.5	5.5	9 spot face depth 5.5	51	M6 depth 11	M6 depth 12	10	12	28	5

Dimensions of rod end male thread

Code / Bore size (mm)	a'	c'	H	kk'	M	MM	T	wf
ø 12	10.5	9	8	M5	5	6	3.2	3.5
ø 16	12	10	10	M6	6	8	3.6	3.5
ø 20	14	12	13	M8	8	10	5	4.5
ø 25	17.5	15	17	M10×1.25	10	12	6	5

● *1 : To calculate A+ (2 x stroke length), B+ stroke length or WF+ stroke length when using a custom stroke length, apply the next longer standard stroke length (instead of the custom stroke length) to the stroke length value. Left and right projection dimensions of rod differ.
(Example) If the custom stroke length is 7 mm, apply the standard stroke length of 10 mm.

● *2 : For dimensions of individual accessories, refer to pages 1108 to 1115.

Dimensions

● SSD-DL-32 to 100 (with switch)

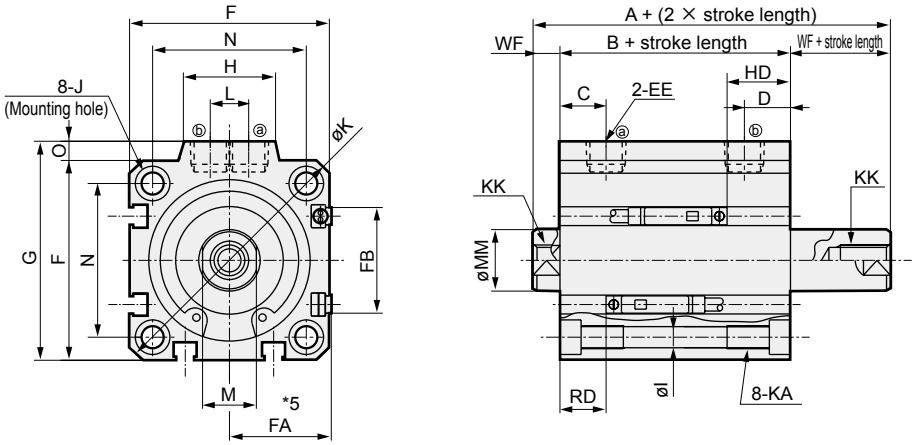

● Rod end male thread

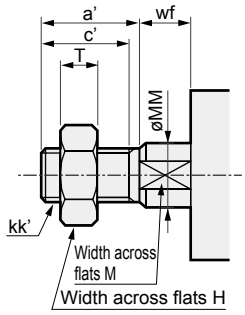

[Bore size ø100]

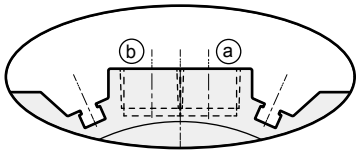

* Only for ø100, the port surface has switch grooves.

● SSD-D-32 to 100 (without switch)

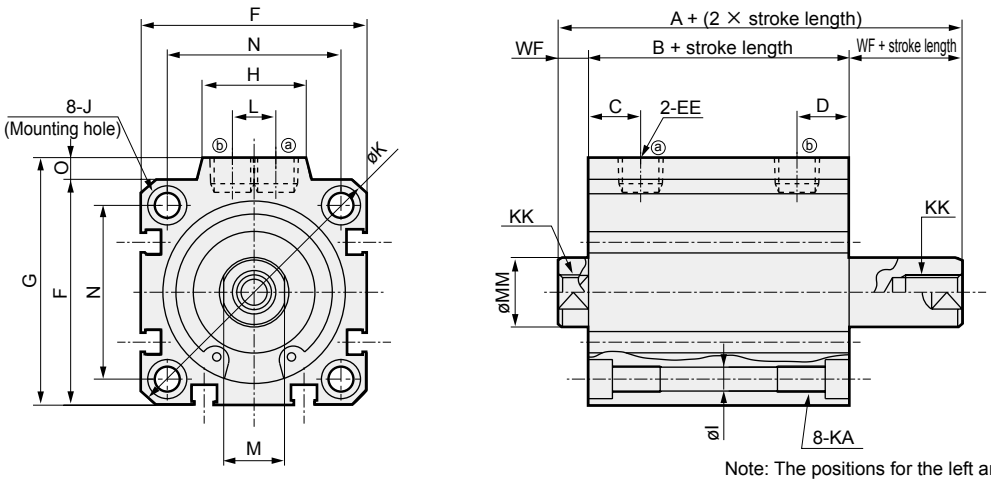

Note: The positions for the left and right widths across flats are unspecified.

Code / Bore size (mm)	Without switch A *1	Without switch B *1	Common dimensions with switch A *1	B *1	C	D	EE	F	FA *5	FB	G	H	I	J	K	KA	KK	L	M	MM	N	O	WF
ø32	44.5	30.5	54.5	40.5	8	8	Rc1/8	45	23(26.5)	20.5	49.5	24	5.5	9 spot face Depth 5.5	60	M6 depth 11	M8 depth 13	10	14	16	34	4.5	7
ø40	53	39	63	49	12	12	Rc1/8	52	26.5(30)	27.5	57	24	5.5	9 spot face Depth 5.5	69	M6 depth 11	M8 depth 13	10	14	16	40	5	7
ø50	55	39	65	49	10.5	10.5	Rc1/4	64	32.5(36)	28.5	71	33	6.9	11 spot face Depth 6.5	86	M8 depth 13	M10 depth 15	15	17	20	50	7	8
ø63	57	41	67	51	13	13	Rc1/4	77	39(42.5)	28.5	84	33	8.7	14 spot face Depth 9	103	M10 depth 25	M10 depth 15	15	17	20	60	7	8
ø80	68.5	48.5	78.5	58.5	16	16	Rc3/8	98	49.5(53)	28.5	104	38	10.5	17.5 spot face Depth 11	132	M12 depth 28	M16 depth 21	15	22	25	77	6	10
ø100	82	58	92	68	23	23	Rc3/8	117	59(62.5)	28.5	123.5	38	10.5	17.5 spot face Depth 11	156	M12 depth 28	M20 depth 27	15	27	30	94	6.5	12

Switch dimensions / Bore size (mm)	Reed T0H/T0V, T5H/T5V HD *2	Reed T0H/T0V, T5H/T5V RD *2	Proximity T2H/T2V, T3H/T3V T2WH/T2WV, T3WH/T3WV HD *2	Proximity T2H/T2V, T3H/T3V T2WH/T2WV, T3WH/T3WV RD *2
ø32	11	9	11	9
ø40	16.5	12	16.5	12
ø50	16.5	12.5	16.5	12.5
ø63	18	13	18	13
ø80	23	15.5	23	15.5
ø100	28.5	19.5	28.5	19.5

- *1 : To calculate A + (2 x stroke length), B + stroke length or WF + stroke length when using a custom stroke length, apply the next longer standard stroke length (instead of the custom stroke length) to the stroke length value. Left and right projection dimensions of rod differ. (Example) If the custom stroke length is 7 mm, apply the standard stroke length of 10 mm.
- *2 : HD and RD dimensions for 5 mm stroke length differ from these dimensions according to the setting.
- *3 : Refer to page 1313 for HD and RD dimensions of the 2-color display, off-delay, AC magnetic field proof, T1* and T8* switches.
- *4 : Refer to page 1313 for the protruding dimensions of the 2-color display, off-delay, AC magnetic field proof, T1* and T8* switches.
- *5 : Dimensions in ( ) of FA are for the radial lead wire.
- *6 : For dimensions of individual accessories, refer to pages 1108 to 1115.

Dimensions of rod end male thread

Code / Bore size (mm)	a'	c'	H	kk'	M	MM	T	wf
ø 32	23.5	20.5	22	M14×1.5	14	16	8	5
ø 40	23.5	20.5	22	M14×1.5	14	16	8	5
ø 50	28.5	26	27	M18×1.5	17	20	11	5
ø 63	28.5	26	27	M18×1.5	17	20	11	5
ø 80	35.5	32.5	32	M22×1.5	22	25	13	8
ø100	35.5	32.5	41	M26×1.5	27	30	16	8

Dimensions

● SSD-DL-125 to 160 (double acting/double rod/with switch)

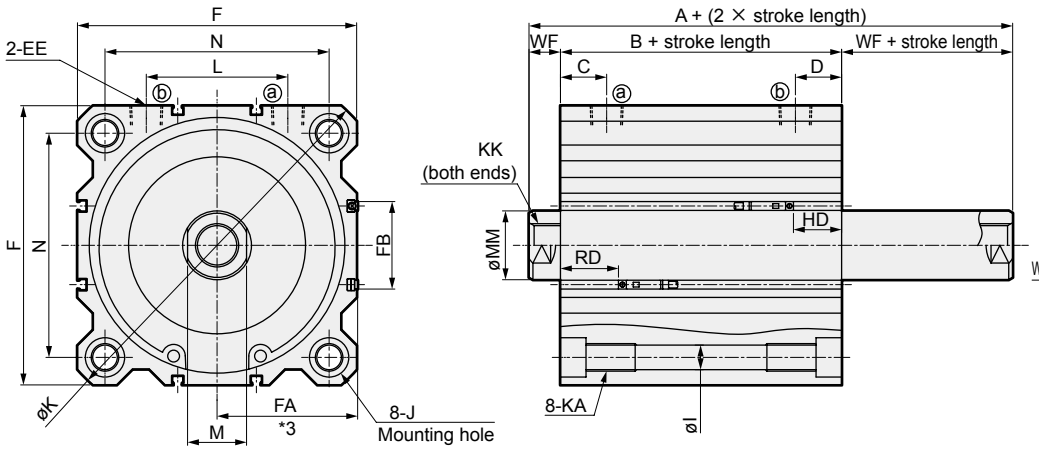

● Rod end male thread

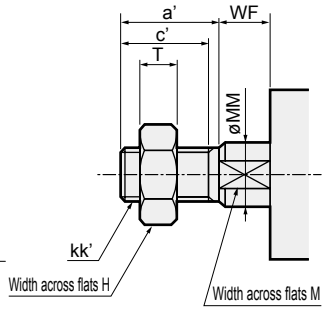

● SSD-D-125 to 160 (double acting/double rod)

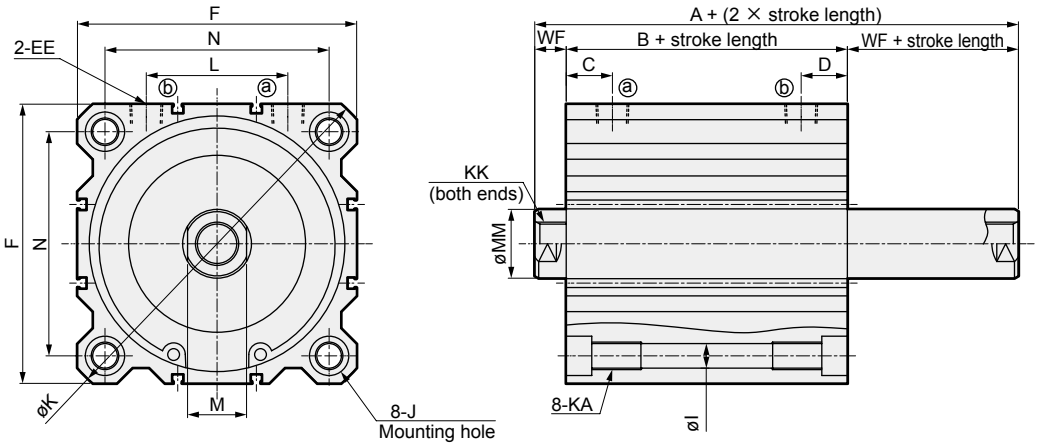

Code / Bore size (mm)	Common dimensions with switch												
	A	B	C	D	EE	F	FA (*3)	FB	I	J	K	KA	KK (*2)
ø125	104	72	23.5	23.5	Rc3/8	142	71.5(75)	44.5	12.5	20 spot face depth 13	190	M14 Depth 25	M22×2.5 Depth 30 (22)
ø140	114	82	27	27	Rc3/8	158	79.5(83)	44.5	12.5	20 spot face depth 13	210	M14 Depth 25	M22×2.5 Depth 30 (22)
ø160	125	91	30	30	Rc3/8	178	89.5(93)	48.5	14.7	23 spot face depth 15.2	238	M16 Depth 28	M24×3 Depth 33 (24)

Code / Bore size (mm)						Reed T0H/T0V, T5H/T5V		Proximity T2H/T2V, T3H/T3V T2WH/T2WV, T3WH/T3WV	
	L	M	MM	N	WF	HD	RD	HD	RD
ø125	72	30	35	114	16	24.5	29.5	24.5	29.5
ø140	80	30	35	128	16	31	33	31	33
ø160	90	36	40	144	17	34	39	34	39

*1 : Refer to page 1313 for HD and RD dimensions of the 2-color display, off-delay, AC magnetic field proof switches.
*2 : Values in ( ) for KK dimensions indicate effective thread length on one side with 10 mm stroke length.
*3 : Dimensions in ( ) of FA are for the radial lead wire.

Dimensions of rod end male thread

Code / Bore size (mm)	a'	c'	H	kk'	M	MM	T	wf
ø125	45	42	46	M30×1.5	30	35	18	13
ø140	45	42	46	M30×1.5	30	35	18	13
ø160	50	47	55	M36×1.5	36	40	21	14

* For dimensions of individual accessories, refer to pages 1108 to 1115.

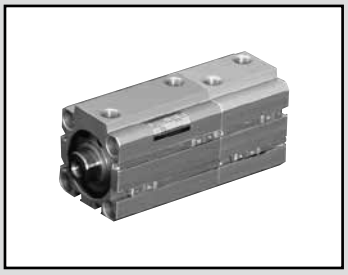

Compact cylinder double acting/back to back

SSD-B Series

● Bore size: ø12/ø16/ø20/ø25/ø32/ø40/ø50/ø63/ø80/ø100

JIS symbol

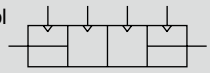

RoHS CAD

Specifications

Item	SSD-B SSD-BL (with switch)									
Bore size mm	ø12	ø16	ø20	ø25	ø32	ø40	ø50	ø63	ø80	ø100
Actuation	Double acting/back to back									
Working fluid	Compressed air									
Max. working pressure MPa	1.0 (≈150 psi, 10 bar)									
Min. working pressure MPa	0.1 (≈15 psi, 1 bar)							0.05 (≈7.3 psi, 0.5 bar)		
Proof pressure MPa	1.6 (≈230 psi, 16 bar)									
Ambient temperature °C	-10 (14°F) to 60 (140°F) (no freezing)									
Port size	M5				Rc1/8		Rc1/4		Rc3/8	
Stroke tolerance mm	$S_1 = {}^{+1.0}_{0}$						$S_2 = {}^{+1.0}_{0}$			
Working piston speed mm/s	50 to 500							50 to 300		
Cushion	None									
Lubrication	Not required (use turbine oil ISO VG32 if necessary for lubrication)									
Allowable absorbed energy J	0.004	0.01	0.016	0.021	0.025	0.092	0.1	0.12	0.27	0.56

Stroke length

Bore size (mm)	Standard stroke length (mm)	Max. stroke length (mm)	Min. stroke length (mm)
ø12	5, 10, 15, 20, 25, 30	30	1
ø16			
ø20			
ø25	5, 10, 15, 20, 25, 30, 40, 50	50	
ø32			
ø40			
ø50			
ø63	5, 10, 20, 30, 40, 50	50	
ø80			
ø100			

*1: The custom stroke length is available in 1 mm increments. However, the total length is the same as that of the next longer standard stroke length.
*2: When using the type with switch, refer to the table below.

Number of installed switches and min. stroke length (mm)

Switch quantity	1	2	3	4	5
Switch model No. / Bore size (mm)	T*	T*	T*	T*	T*
ø12	5	5	25	-	-
ø16	5	5	25	-	-
ø20	5	5	-	-	-
ø25	5	5	35	50	-
ø32	5	5	35	50	-
ø40	5	5	35	50	-
ø50	5	5	35	50	-
ø63	5	5	35	50	-
ø80	5	5	35	50	-
ø100	5	5	35	50	-

Note: Less than 10 mm with the 2-color display, off-delay, AC magnetic field proof, T1* or T8* switch is not available.

Switch specifications

● 1-color/2-color display/for AC magnetic field proof

Item	Proximity 2-wire				Proximity 3-wire				Reed 2-wire							Proximity 2-wire
	T1H/ T1V	T2H/T2V/ T2JH/T2JV	T2YH/ T2YV	T2WH/ T2WV	T3H/ T3V	T3PH/ T3PV	T3YH/ T3YV	T3WH/ T3WV	T0H/T0V		T5H/T5V		T8H/T8V			T2YD (*4) T2YDT
Applications	For programmable controller, relay, compact solenoid valve	Dedicated for programmable controller			For programmable controller, relay				For programmable controller, relay		For programmable controller, relay (no lamp), serial		For programmable controller, relay			Dedicated for programmable controller
Output method	-				NPN output	PNP output	NPN output	NPN output	-							
Pwr. supp. V.	-				10 to 28 VDC				-							
Load voltage	85 to 265 VAC	10 to 30 VDC		24 VDC ±10%	30 VDC or less				12/24 VDC	100/110 VAC	5/12/24 VDC	100/110 VAC	12/24 VDC	110 VAC	220 VAC	24 VDC ±10%
Load current	5 to 100 mA	5 to 20 mA (*3)			100 mA or less		50 mA or less		5 to 50 mA	7 to 20 mA	50 mA or less	20 mA or less	5 to 50 mA	7 to 20 mA	7 to 10 mA	5 to 20 mA
Indicator lamp	LED (Lit when ON)	LED (Lit when ON)	Red/green LED (Lit when ON)	Red/green LED (Lit when ON)	LED (Lit when ON)	Yellow LED (Lit when ON)	Red/green LED (Lit when ON)	Red/green LED (Lit when ON)	LED (Lit when ON)		Without indicator lamp		LED (Lit when ON)			Red/green LED (Lit when ON)
Leakage current	≤ 1 mA at 100 VAC, ≤ 2 mA at 200 VAC	1 mA or less			10 μA or less				0 mA							1 mA or less
Weight g	1 m:33 3 m:87 5 m:142	1 m:18 3 m:49 5 m:80	1 m:33 3 m:87 5 m:142	1 m:18 3 m:49 5 m:80	1 m:18 3 m:49 5 m:80		1 m:33 3 m:87 5 m:142	1 m:18 3 m:49 5 m:80	1 m:18 3 m:49 5 m:80				1 m:33 3 m:87 5 m:142			1 m:61 3 m:166 5 m:272

*1 : Refer to Ending Page 1 for detailed switch specifications and dimensions.
*2 : Switches other than the above models, such as switches with connectors, are also available. Refer to Ending Page 1.
*3 : The max. load current is 20 mA at 25°C. The current is lower than 20 mA if the operating ambient temperature around the switch is higher than 25°C. (5 to 10 mA at 60°C)
*4 : Switch for AC magnetic field (T2YD/T2YDT) cannot be used in DC magnetic field.

Cylinder weight table (the weight of the switches is when there are 2 cylinder switches.)

(Unit: g)

Stroke length (mm)	5		10		15		20		25		30		40		50	
Bore size (mm)	No switch	Switch	No switch	Switch	No switch	Switch	No switch	Switch	No switch	Switch	No switch	Switch	No switch	Switch	No switch	Switch
ø12	84	188	102	188	122	208	140	226	160	246	178	264	-	-	-	-
ø16	108	224	132	224	154	246	178	270	202	294	226	318	-	-	-	-
ø20	160	278	188	346	218	376	248	406	276	434	306	464	-	-	-	-
ø25	212	402	246	436	282	472	318	508	354	544	388	578	460	650	530	720
ø32	282	518	330	566	378	614	426	662	472	708	520	756	616	852	710	946
ø40	404	698	462	756	518	812	578	870	634	928	690	984	804	1098	918	1212
ø50	682	1086	774	1178	866	1270	958	1362	1050	1454	1144	1548	1328	1732	1512	1916
ø63	1044	1626	1166	1748	-	-	1410	1992	-	-	1654	2236	1900	2482	2144	2726
ø80	1920	2778	2110	2968	-	-	2488	3348	-	-	2868	3730	3252	4114	3634	4500
ø100	2908	4074	3152	4320	-	-	3640	4810	-	-	4132	5302	4622	5796	5118	6292

Theoretical thrust table

(Unit: N)

Bore size (mm)	Operating direction	Working pressure MPa											
		0.05	0.1	0.15	0.2	0.3	0.4	0.5	0.6	0.7	0.8	0.9	1.0
ø12	Push	-	11.3	17.0	22.6	33.9	45.2	56.5	67.9	79.2	90.5	1.02×10^2	1.13×10^2
	Pull	-	8.48	12.7	17.0	25.4	33.9	42.4	50.9	59.4	67.9	76.3	84.8
ø16	Push	-	20.1	30.2	40.2	60.3	80.4	1.01×10^2	1.21×10^2	1.41×10^2	1.61×10^2	1.81×10^2	2.01×10^2
	Pull	-	15.1	22.6	30.2	45.2	60.3	75.4	90.5	1.06×10^2	1.21×10^2	1.36×10^2	1.51×10^2
ø20	Push	-	31.4	47.1	62.8	94.2	1.26×10^2	1.57×10^2	1.88×10^2	2.20×10^2	2.51×10^2	2.83×10^2	3.14×10^2
	Pull	-	23.6	35.3	47.1	70.7	94.2	1.18×10^2	1.41×10^2	1.65×10^2	1.88×10^2	2.12×10^2	2.36×10^2
ø25	Push	-	49.1	73.6	98.2	1.47×10^2	1.96×10^2	2.45×10^2	2.95×10^2	3.44×10^2	3.93×10^2	4.42×10^2	4.91×10^2
	Pull	-	37.8	56.7	75.6	1.13×10^2	1.51×10^2	1.89×10^2	2.27×10^2	2.64×10^2	3.02×10^2	3.40×10^2	3.78×10^2
ø32	Push	-	80.4	1.21×10^2	1.61×10^2	2.41×10^2	3.22×10^2	4.02×10^2	4.83×10^2	5.63×10^2	6.43×10^2	7.24×10^2	8.04×10^2
	Pull	-	60.3	90.5	1.21×10^2	1.81×10^2	2.41×10^2	3.02×10^2	3.62×10^2	4.22×10^2	4.83×10^2	5.43×10^2	6.03×10^2
ø40	Push	-	1.26×10^2	1.88×10^2	2.51×10^2	3.77×10^2	5.03×10^2	6.28×10^2	7.54×10^2	8.80×10^2	1.01×10^3	1.13×10^3	1.26×10^3
	Pull	-	1.06×10^2	1.58×10^2	2.11×10^2	3.17×10^2	4.22×10^2	5.28×10^2	6.33×10^2	7.39×10^2	8.44×10^2	9.50×10^2	1.06×10^3
ø50	Push	-	1.96×10^2	2.95×10^2	3.93×10^2	5.89×10^2	7.85×10^2	9.82×10^2	1.18×10^3	1.37×10^3	1.57×10^3	1.77×10^3	1.96×10^3
	Pull	-	1.65×10^2	2.47×10^2	3.30×10^2	4.95×10^2	6.60×10^2	8.25×10^2	9.90×10^2	1.15×10^3	1.32×10^3	1.48×10^3	1.65×10^3
ø63	Push	1.56×10^2	3.12×10^2	4.68×10^2	6.23×10^2	9.35×10^2	1.25×10^3	1.56×10^3	1.87×10^3	2.18×10^3	2.49×10^3	2.81×10^3	3.12×10^3
	Pull	1.40×10^2	2.80×10^2	4.20×10^2	5.61×10^2	8.41×10^2	1.12×10^3	1.40×10^3	1.68×10^3	1.96×10^3	2.24×10^3	2.52×10^3	2.80×10^3
ø80	Push	2.51×10^2	5.03×10^2	7.54×10^2	1.01×10^3	1.51×10^3	2.01×10^3	2.51×10^3	3.02×10^3	3.52×10^3	4.02×10^3	4.52×10^3	5.03×10^3
	Pull	2.27×10^2	4.54×10^2	6.80×10^2	9.07×10^2	1.36×10^3	1.81×10^3	2.27×10^3	2.72×10^3	3.17×10^3	3.63×10^3	4.08×10^3	4.54×10^3
ø100	Push	3.93×10^2	7.85×10^2	1.18×10^3	1.57×10^3	2.36×10^3	3.14×10^3	3.93×10^3	4.71×10^3	5.50×10^3	6.28×10^3	7.07×10^3	7.85×10^3
	Pull	3.57×10^2	7.15×10^2	1.07×10^3	1.43×10^3	2.14×10^3	2.86×10^3	3.57×10^3	4.29×10^3	5.00×10^3	5.72×10^3	6.43×10^3	7.15×10^3

How to order

Without switch (without magnet for switch)

SSD-B — 12 - ◯ 5 — N - 10 — N - I

With switch (built-in magnet for switch)

SSD-BL - 12 - ◯ 5 - T0H - R - N - 10 - T0H - R - N - I

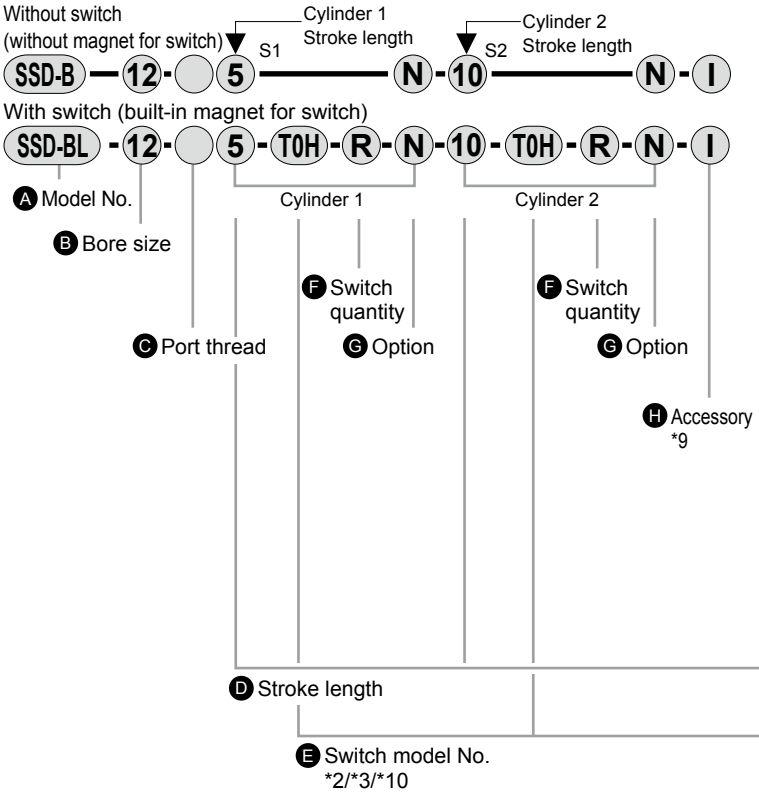

Code	Description
Ⓐ Model No.	
SSD-B	Double acting/back to back
SSD-BL	Double acting/back to back/with switch
SSD-BL1	ø12, ø16 2-color display, off-delay, with T1* switch
Ⓑ Bore size (mm)	
12	ø12
16	ø16
20	ø20
25	ø25
32	ø32
40	ø40
50	ø50
63	ø63
80	ø80
100	ø100
Ⓒ Port thread	
Blank	Rc thread
NN	NPT thread (ø32 and over) (made-to-order product)
GN	G thread (ø32 and over) (made-to-order product)
Ⓓ Stroke length (mm)	
Refer to the stroke length table on the following page.	

Ⓔ Switch model No.

Axial lead wire	Radial lead wire	Contact	Voltage AC	Voltage DC	Display	Lead wire
TOH*	T0V*	Reed	●	●	1-color display	2-wire
T5H*	T5V*	Reed	●	●	Without indicator lamp	2-wire
T8H*	T8V*	Reed	●	●	1-color display	2-wire
T1H*	T1V*	Proximity	●		1-color display	2-wire
T2H*	T2V*	Proximity		●	1-color display	2-wire
T3H*	T3V*	Proximity		●	1-color display	3-wire
T3PH*	T3PV*	Proximity		●	1-color display	3-wire
T2WH*	T2WV*	Proximity		●	2-color display	2-wire
T2YH*	T2YV*	Proximity		●	2-color display	2-wire
T3WH*	T3WV*	Proximity		●	2-color display	3-wire
T3YH*	T3YV*	Proximity		●	2-color display	3-wire
T2JH*	T2JV*	Proximity		●	1-color display off-delay	2-wire
T2YD*	-	Proximity		●	2-color display AC magnetic field	2-wire
T2YDT*	-	Proximity		●	2-color display AC magnetic field	2-wire
T2HR3	T2VR3	Proximity		●	1-color display (bend resist lead wire specs)	2-wire

* Lead wire length	
Blank	1 m (standard)
3	3 m (option)
5	5 m (option)
Ⓕ Switch quantity	
R	1 on rod side
H	1 on head side
D	2
Ⓖ Option	
Blank	Rod end female thread
N	Rod end male thread
M *8	Piston rod material (stainless steel)
Ⓗ Accessory (available when rod end male thread "N" is selected)	
I	Rod eye
I2	Rod eye (compact)
Y	Rod clevis (pin and snap ring included)
Y2	Rod clevis (compact) (pin and snap ring included)

Precautions for model No. selection

*1 : When two cylinders are connected, the connection is from Cylinder 2 side. (Refer to dimensions)
Determine cylinders 1 and 2 with the mounting method in mind.
*2 : Switches other than switch model No. are also available. (Made to order) Refer to Ending Page 1 for details.
3 : An AC magnetic field proof switch cannot be installed on ø12 and ø16. In addition, T8 switch cannot be installed on ø12 to ø32.
*4 : Copper and PTFE free as standard for SSD-B-12 to 50.
*5 : The mounting bracket is included at shipment.
*6 : Refer to Ending Page 85 for custom specifications of rod end form.
*7 : Refer to pages 1086 and 1089 for combinations of variations/options.
*8 : Option code "N" will be inscribed on both S1 and S2 sides, but for all other option codes, they will only be written on S2.
*9 : Two units are included when an accessory is selected. One unit each is included when "IY" is selected.
*10 : Switches are shipped with the product. Contact CKD if assembling before shipment is necessary.
*11 : When S1 stroke length is at or below that in the table below, the length of the usable mounting bolts will differ from the standard and so contact CKD.

Bore size	Without switch	With switch
	S1 stroke length	
ø20	10 or less	-
ø25	5 or less	-
ø32	5 or less	-
ø50	5 or less	-
ø63	15 or less	5 or less
ø80	20 or less	10 or less
ø100	10 or less	-

[Example of model No.]

SSD-BL-12-5-T0H-R-N-10-T0H-R-N

Model: Compact cylinder, back to back

Ⓑ Bore size : ø12 mm
Ⓒ Port thread : Rc thread
Ⓓ Stroke length S1 : 5 mm
Ⓔ Switch model No. : Reed switch T0H, lead wire 1 m
Ⓕ Switch quantity : 1 on rod side
Ⓒ Option : Rod end male thread
Ⓓ Stroke length S2 : 10 mm
Ⓔ Switch model No. : Reed switch T0H, lead wire 1 m
Ⓕ Switch quantity : 1 on rod side
Ⓖ Option : Rod end male thread

Cylinder 1

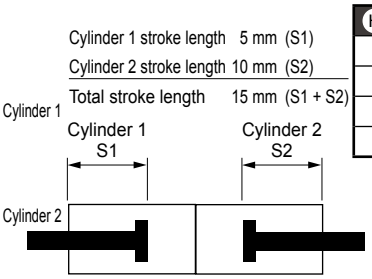

How to order switch

SW - **T0H**

Switch model No.
(Item Ⓔ on page 1202)

[Stroke length table]

Stroke length (mm)		Applicable bore size									
		ø12	ø16	ø20	ø25	ø32	ø40	ø50	ø63	ø80	ø100
Standard stroke length	5	●	●	●	●	●	●	●	●	●	●
	10	●	●	●	●	●	●	●	●	●	●
	15	●	●	●	●	●	●	●			
	20	●	●	●	●	●	●	●	●	●	●
	25	●	●	●	●	●	●	●			
	30	●	●	●	●	●	●	●	●	●	●
	40				●	●	●	●	●	●	●
	50				●	●	●	●	●	●	●
Min. stroke length (mm) *1		1									
Max. stroke length (mm)		30			50						
Custom stroke length *2		In 1 mm increments									

1 : Less than 5 mm with 1-color display switch and less than 10 mm with the 2-color display, off-delay, AC magnetic field proof, T1 or T8* switch are not available. Refer to page 1200 for the number of installed switches and the min. stroke length.
*2 : The total length is the same as that of the next longer standard stroke length.

Internal structure and parts list

● SSD-BL-12 to 25 (double acting/back to back/with switch)

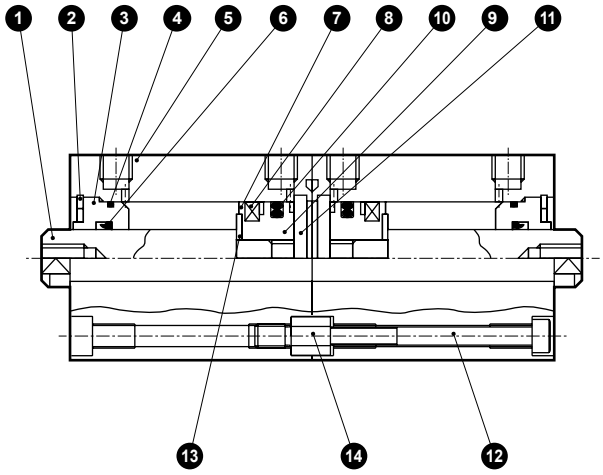

● SSD-BL-32 to 50 (double acting/back to back/with switch)

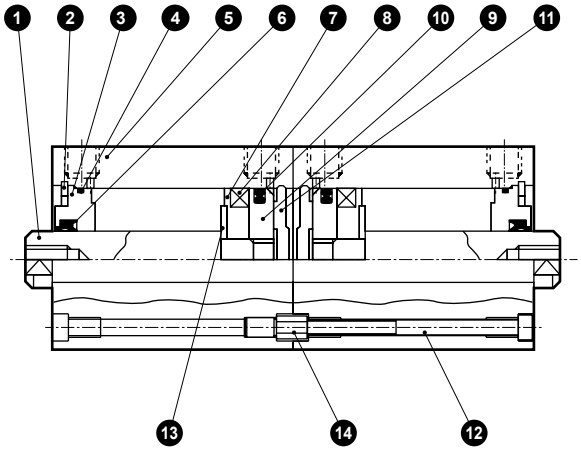

● SSD-B-12 to 25 (double acting/back to back)

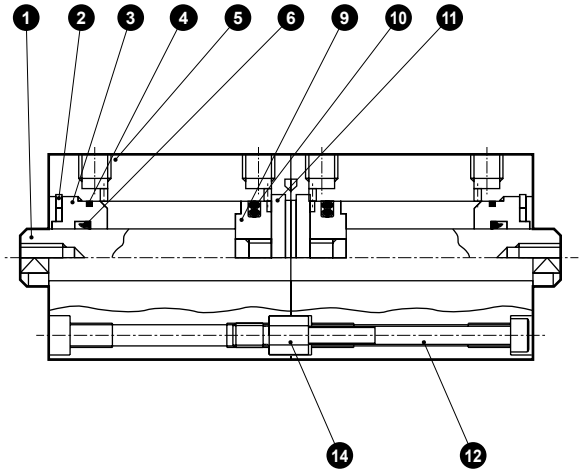

● SSD-B-32 to 50 (double acting/back to back)

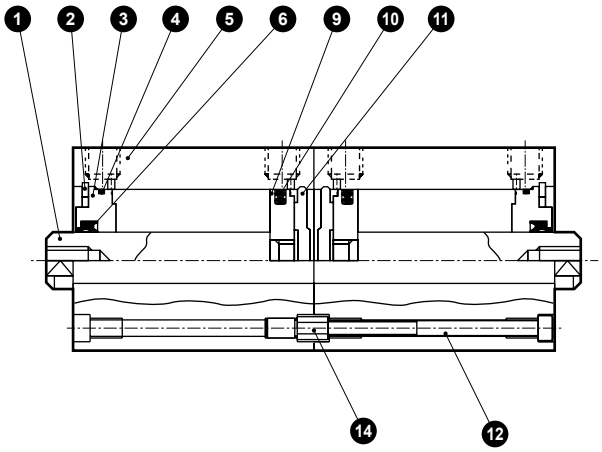

No.	Part name	Material	Remarks
1	Piston rod	ø12 to ø25: Stainless steel ø32 to ø50: Steel	Industrial chrome plating
2	C type snap ring	Steel	Zinc phosphate
3	Rod metal	Special aluminum	Alumite
4	Rod metal gasket	Nitrile rubber	
5	Body	Aluminum alloy	Hard alumite
6	Rod packing	Nitrile rubber	
7	Spacer	ø12: Aluminum alloy ø16 to ø50: Special resin	ø12: Chromate
8	Magnet	Plastic	
9	Piston	Aluminum alloy	Chromate
10	Piston packing	Nitrile rubber	
11	Cover	ø12 to ø25: Stainless steel ø32 to ø50: Aluminum alloy	ø32 to ø50: Alumite
12	Hex socket screw	Alloy steel	Black finish
13	Spacer washer	Stainless steel	ø12 to ø50
14	Connector	Steel	Zinc chromate

Repair parts list

Bore size (mm)	Kit No.	Repair parts No.
ø12	SSD-B-12K	❹ ❻ ❿
ø16	SSD-B-16K	
ø20	SSD-B-20K	
ø25	SSD-B-25K	
ø32	SSD-B-32K	
ø40	SSD-B-40K	
ø50	SSD-B-50K	

SSD-B application examples

When the same stroke lengths are combined, 3 positions are possible.

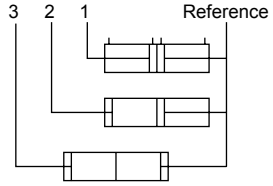

When different stroke lengths are combined, 4 positions are possible.

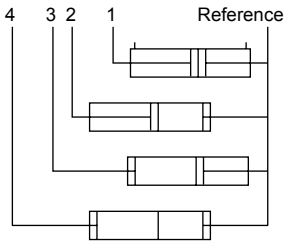

Internal structure and parts list

● SSD-BL-63 to 100 (double acting/back to back/with switch)

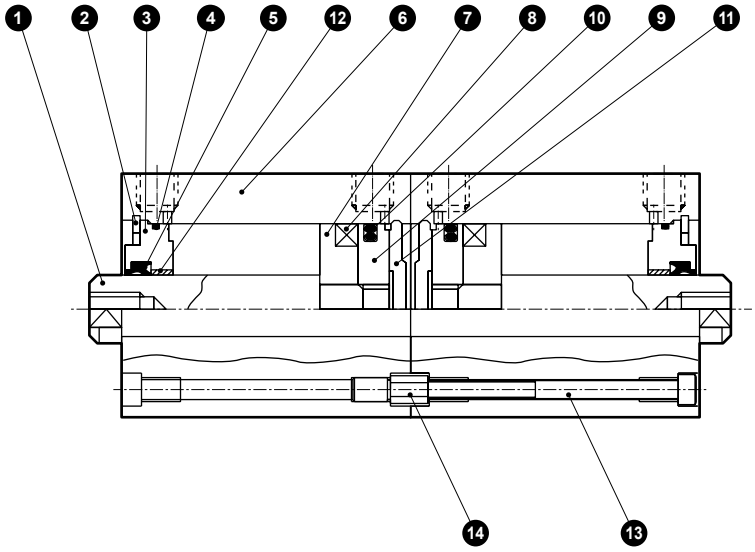

● SSD-B-63 to 100 (double acting/back to back)

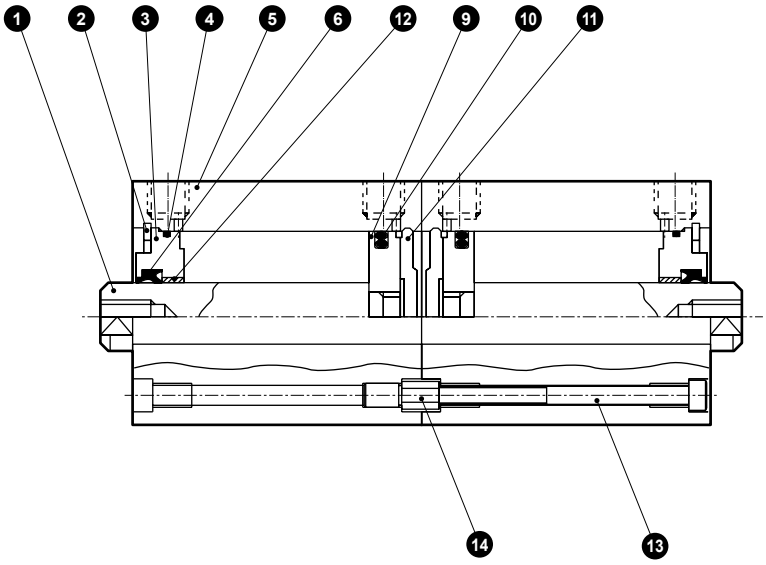

No.	Part name	Material	Remarks
1	Piston rod	ø12 to ø25: Stainless steel ø32 to ø50: Steel	Industrial chrome plating
2	C type snap ring	Steel	Zinc phosphate
3	Rod metal	Aluminum alloy	Alumite
4	Rod metal gasket	Nitrile rubber	
5	Body	Aluminum alloy	Hard alumite
6	Rod packing	Nitrile rubber	
7	Spacer	Aluminum alloy	Chromate

No.	Part name	Material	Remarks
8	Magnet	Plastic	
9	Piston	Aluminum alloy	Chromate
10	Piston packing	Nitrile rubber	
11	Cover	Aluminum alloy	Alumite
12	Bush	Oiles drymet	
13	Hex socket screw	Alloy steel	Black finish
14	Connector	Steel	Zinc chromate

Repair parts list

Bore size (mm)	Kit No.	Repair parts No.
ø63	SSD-B-63K	❹ ❻ ❿
ø80	SSD-B-80K	
ø100	SSD-B-100K	

SCP*3
CMK2
CMA2
SCM
SCG
SCA2
SCS2
CKV2
CAV2/COVP/N2
SSD2
SSG
SSD
CAT
MDC2
MVC
SMG
MSD/MSDG
FC*
STK
SRL3
SRG3
SRM3
SRT3
MRL2
MRG2
SM-25
ShkAbs
FJ
FK
Spd Contr
Ending

Dimensions

● SSD-BL-12/16 (with switch)

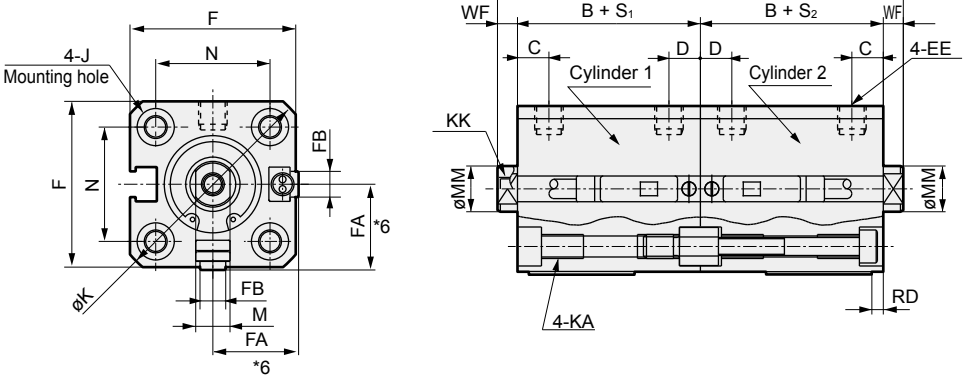

● Rod end male thread

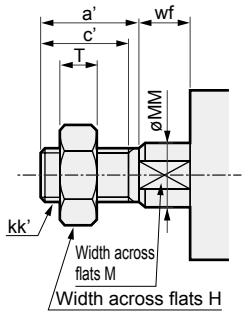

● SSD-BL-12/16 (without switch)

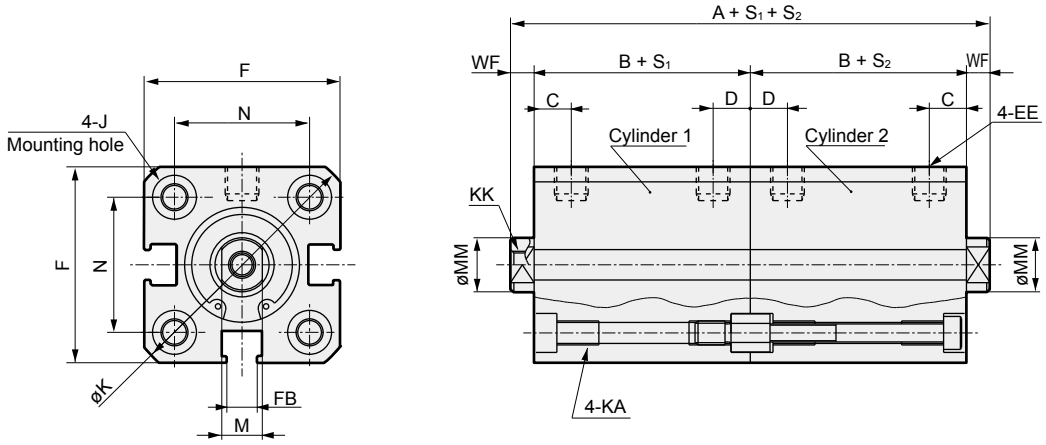

Code / Bore size (mm)	Without switch A *1	Without switch B *1	Common dimensions with switch A *1	B *1	C	D	EE	F	FA *6	FB	J	K	KA	KK	M	MM	N	WF
ø12	41	17	51	22	5.5	5.5	M5	25	13(16.5)	4.5	6.5 spot face depth 3.5	32	M4 depth 7	M3 depth 6	5	6	15.5	3.5
ø16	41	17	51	22	5.5	5.5	M5	29	15(18.5)	4.5	6.5 spot face depth 3.5	38	M4 depth 7	M4 depth 8	6	8	20	3.5

Switch dimensions / Bore size (mm)	Reed T0H/T0V, T5H/T5V HD *2	Reed T0H/T0V, T5H/T5V RD *2	Proximity T2H/T2V, T3H/T3V T2WH/T2WV, T3WH/T3WV HD *2	Proximity T2H/T2V, T3H/T3V T2WH/T2WV, T3WH/T3WV RD *2
ø12	0	2.5	0	2.5
ø16	0	2	0	2

● *1 : To calculate A + S_1 + S_2 or B + S_1 + S_2 when using custom stroke length, apply the next longer standard stroke lengths (instead of the custom stroke length) to the stroke length value. (Example) If the custom stroke length is 7 mm, apply the standard stroke length of 10 mm.

● *2 : HD and RD dimensions for 5 mm stroke length differ from these dimensions according to the setting.

● *3 : When the stroke length S_1 or S_2 is 5 mm for ø12 or ø16 with switch in the dimensions table above, (B+S_1), (B+S_2), and (A+S_1+S_2) are as shown in the table below.

Code / Bore size	Conditions	B + S_1	B + S_2	A + S_1 + S_2
ø12 ø16	S_1 = 5	32	22 + S_2	61 + S_2
	S_2 = 5	22 + S_1	32	61 + S_1
	When S_1 = S_2 = 5	32	32	71

The dimensions of S_1/S_2 with the custom stroke length are the same as those of the next longer standard stroke length.

● *4 : Refer to page 1312 for HD and RD dimensions for the 2-color display, off-delay, AC magnetic field proof, T1* and T8* switches.

● *5 : Refer to page 1312 for the protruding dimensions of the 2-color display, off-delay, AC magnetic field proof, T1* and T8* switches.

● *6 : Dimensions in ( ) of FA are for the radial lead wire.

● *7 : For dimensions of individual accessories, refer to pages 1108 to 1115.

Dimensions of rod end male thread

Code / Bore size (mm)	a'	c'	H	kk'	M	MM	T	wf
ø 12	10.5	9	8	M5	5	6	3.2	3.5
ø 16	12	10	10	M6	6	8	3.6	3.5

Dimensions

● SSD-BL-20/25 (with switch)

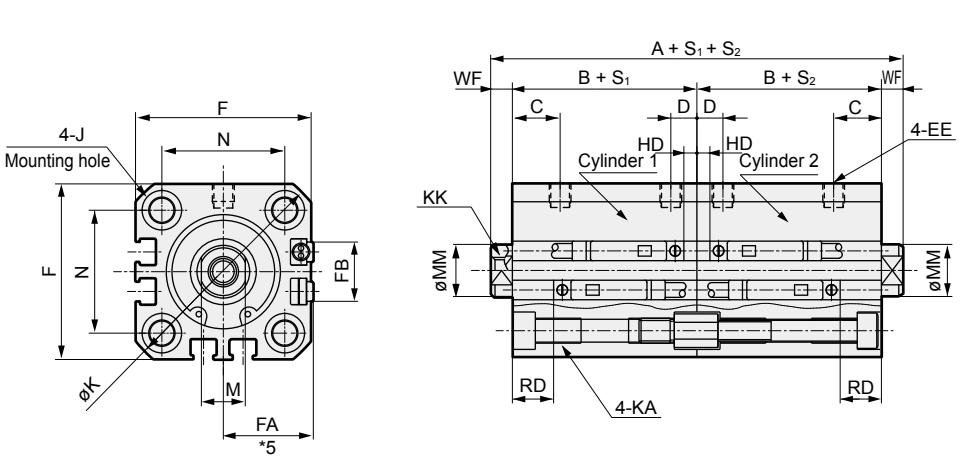

● Rod end male thread

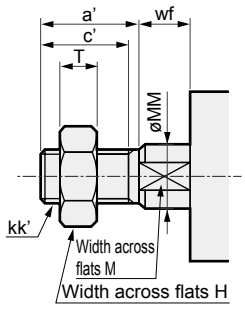

● SSD-B-20/25 (without switch)

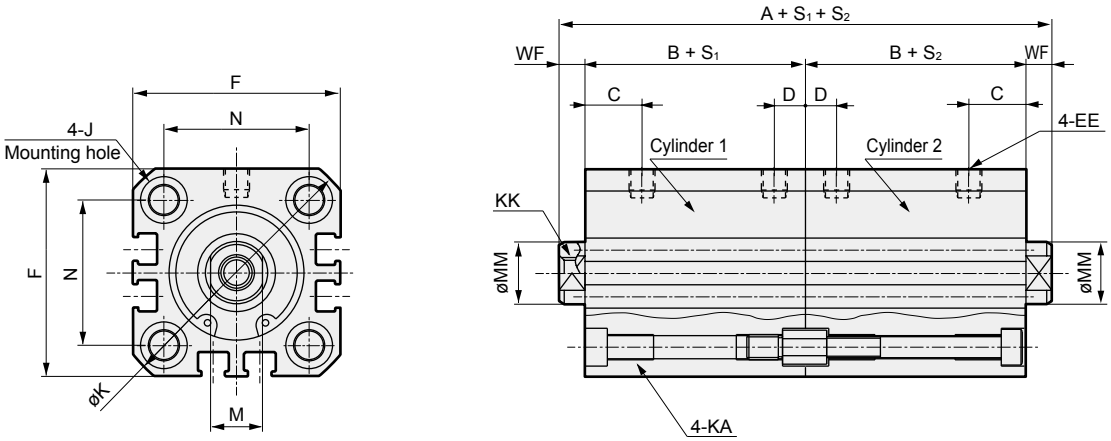

Code	Without switch		Common dimensions with switch															
Bore size (mm)	A *1	B *1	A *1	B *1	C	D	EE	F	FA *5	FB	J	K	KA	KK	M	MM	N	WF
ø20	48	19.5	68	29.5	8	5.5	M5	36	18.5(22)	12.5	9 spot face depth 5.5	47	M6 depth 11	M5 depth 7	8	10	25.5	4.5
ø25	55	22.5	75	32.5	11	6	M5	40	20.5(24)	13.5	9 spot face depth 5.5	51	M6 depth 11	M6 depth 12	10	12	28	5

Switch dimensions	Reed T0H/T0V, T5H/T5V		Proximity T2H/T2V, T3H/T3V T2WH/T2WV, T3WH/T3WV	
Bore size (mm)	HD *2	RD *2	HD *2	RD *2
ø20	3	6.5	3	6.5
ø25	3	9.5	3	9.5

- *1 : To calculate A + S_1 + S_2 or B + S_1 + S_2 when using custom stroke length, apply the next longer standard stroke length (instead of the custom stroke length) to the stroke length value.
  (Example) If the custom stroke length is 7 mm, apply the standard stroke length of 10 mm.
- *2 : HD and RD dimensions for 5 mm stroke length differ from these dimensions according to the setting.
- *3 : Refer to page 1312 for HD and RD dimensions for the 2-color display, off-delay, AC magnetic field proof, T1* and T8* switches.
- *4 : Refer to page 1312 for the protruding dimensions of the 2-color display, off-delay, AC magnetic field proof, T1* and T8* switches.
- *5 : Dimensions in ( ) of FA are for the radial lead wire.
- *6 : For dimensions of individual accessories, refer to pages 1108 to 1115.

Dimensions of rod end male thread

Code / Bore size (mm)	a'	c'	H	kk'	M	MM	T	wf
ø 20	14	12	13	M8	8	10	5	4.5
ø 25	17.5	15	17	M10×1.25	10	12	6	5

SCP*3
CMK2
CMA2
SCM
SCG
SCA2
SCS2
CKV2
CAV2/COVP/N2
SSD2
SSG
SSD
CAT
MDC2
MVC
SMG
MSD/MSDG
FC*
STK
SRL3
SRG3
SRM3
SRT3
MRL2
MRG2
SM-25
ShkAbs
FJ
FK
Spd Contr
Ending

Dimensions

● SSD-BL-32 to 100 (with switch)

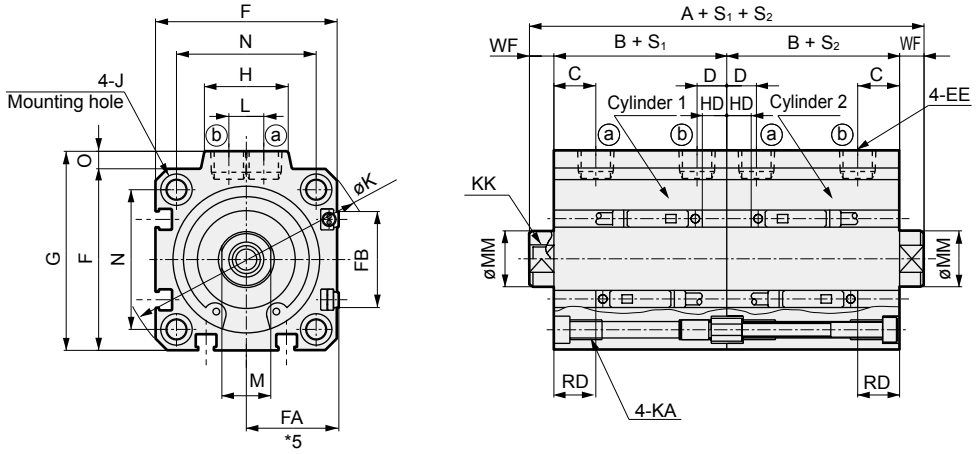

● Rod end male thread

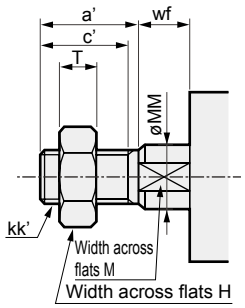

● SSD-B-32 to 100 (without switch)

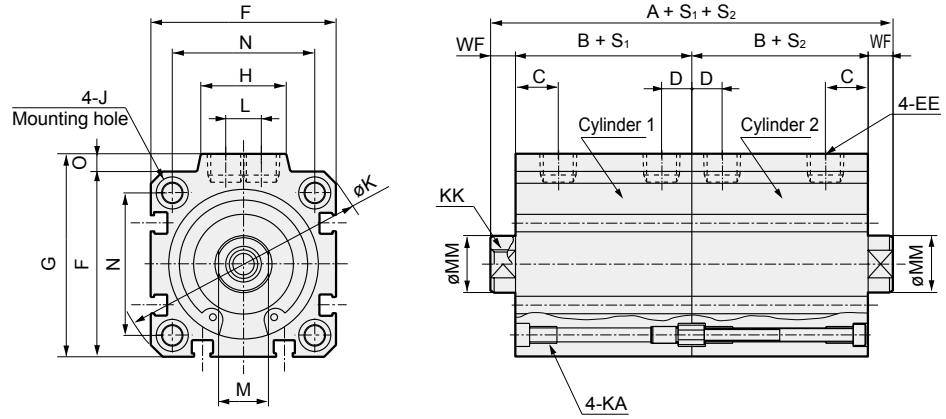

[Bore size ø100]

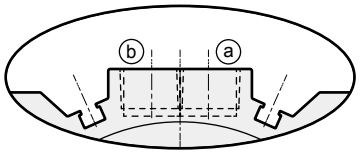

* Only for ø100, the port surface has switch grooves.

Code / Bore size (mm)	Without switch A *1	Without switch B *1	Common dimensions with switch A *1	B *1	C	D	EE	F	FA *5	FB	G	H	J	K	KA	KK	L	M	MM	N	O	WF
ø32	60	23	80	33	8	8	Rc1/8	45	23(26.5)	20.5	49.5	24	9 spot face depth 5.5	60	M6 depth 11	M8 depth 13	10	14	16	34	4.5	7
ø40	73	29.5	93	39.5	12	8.5	Rc1/8	52	26.5(30)	27.5	57	24	9 spot face depth 5.5	69	M6 depth 11	M8 depth 13	10	14	16	40	5	7
ø50	77	30.5	97	40.5	10.5	10.5	Rc1/4	64	32.5(36)	28.5	71	33	11 spot face depth 6.5	86	M8 depth 13	M10 depth 15	15	17	20	50	7	8
ø63	88	36	108	46	13	11	Rc1/4	77	39(42.5)	28.5	84	33	14 spot face depth 9	103	M10 depth 25	M10 depth 15	15	17	20	60	7	8
ø80	107	43.5	127	53.5	16	13	Rc3/8	98	49.5(53)	28.5	104	38	17.5 spot face depth 11	132	M12 depth 28	M16 depth 21	15	22	25	77	6	10
ø100	130	53	150	63	23	15	Rc3/8	117	59(62.5)	28.5	123.5	38	17.5 spot face depth 11	156	M12 depth 28	M20 depth 27	15	27	30	94	6.5	12

Switch dimensions / Bore size (mm)	Reed T0H/T0V, T5H/T5V HD *2	Reed T0H/T0V, T5H/T5V RD *2	Proximity T2H/T2V, T3H/T3V T2WH/T2WV, T3WH/T3WV HD *2	Proximity T2H/T2V, T3H/T3V T2WH/T2WV, T3WH/T3WV RD *2
ø32	3.5	9	3.5	9
ø40	7	12	7	12
ø50	7.5	12.5	7.5	12.5
ø63	12.5	13	12.5	13
ø80	17.5	15.5	17.5	15.5
ø100	23	19.5	23	19.5

- *1 : To calculate A + S_1 + S_2 or B + S_1 + S_2 when using custom stroke length, apply the next longer standard stroke length (instead of the custom stroke length) to the stroke length value.
  (Example) If the custom stroke length is 7 mm, apply the standard stroke length of 10 mm.
- *2 : HD and RD dimensions for 5 mm stroke length differ from these dimensions according to the setting.
- *3 : Refer to page 1313 for HD and RD dimensions of the 2-color display, off-delay, AC magnetic field proof, T1* and T8* switches.
- *4 : Refer to page 1313 for the protruding dimensions of the 2-color display, off-delay, AC magnetic field proof, T1* and T8* switches.
- *5 : Dimensions in ( ) of FA are for the radial lead wire.

Dimensions of rod end male thread

Code / Bore size (mm)	a'	c'	H	kk'	M	MM	T	wf
ø 32	23.5	20.5	22	M14×1.5	14	16	8	5
ø 40	23.5	20.5	22	M14×1.5	14	16	8	5
ø 50	28.5	26	27	M18×1.5	17	20	11	5
ø 63	28.5	26	27	M18×1.5	17	20	11	5
ø 80	35.5	32.5	32	M22×1.5	22	25	13	8
ø100	35.5	32.5	41	M26×1.5	27	30	16	8

* For dimensions of individual accessories, refer to pages 1108 to 1115.

MEMO

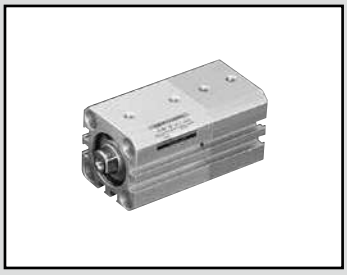

Compact cylinder double acting/two-stage

SSD-W Series

● Bore size: ø12/ø16/ø20/ø25/ø32/ø40/ø50/ø63/ø80/ø100

RoHS CAD

Specifications

Item	SSD-W SSD-WL (with switch)									
Bore size mm	ø12	ø16	ø20	ø25	ø32	ø40	ø50	ø63	ø80	ø100
Actuation	Double acting/two-stage									
Working fluid	Compressed air									
Max. working pressure MPa	1.0 (≈150 psi, 10 bar) (Note)									
Min. working pressure MPa	0.15 (≈22 psi, 1.5 bar)							0.1 (≈15 psi, 1 bar)		
Proof pressure MPa	1.6 (≈230 psi, 16 bar)									
Ambient temperature °C	-10 (14°F) to 60 (140°F) (no freezing)									
Port size	M5				Rc1/8		Rc1/4		Rc3/8	
Stroke tolerance mm	$S_1 = {}^{+1.0}_{0}$						$S_2 = {}^{0}_{-1.5}$			
Working piston speed mm/s	50 to 500							50 to 300		
Cushion	None									
Lubrication	Not required (use turbine oil ISO VG32 if necessary for lubrication)									
Allowable absorbed energy J	0.004	0.01	0.016	0.021	0.025	0.092	0.1	0.12	0.27	0.56

Note: The max. working pressure is 0.5 MPa when S1 and S2 are the same.

Stroke length

Bore size (mm)	Standard stroke length (mm)	Max. stroke length (mm)	Min. stroke length (mm)
ø12	5, 10, 15, 20, 25, 30	30	1
ø16			
ø20			
ø25	5, 10, 15, 20, 25, 30, 40, 50	50	
ø32			
ø40			
ø50			
ø63	5, 10, 20, 30, 40, 50	50	
ø80			
ø100			

*1) The custom stroke length is available in 1 mm increments. However, the total length is the same as that of the next longer standard stroke length.
*2) When using the type with a switch, refer to the table below.

Number of installed switches and min. stroke length (mm)

Switch quantity	1	2	3	4	5
Switch model No. / Bore size (mm)	T*	T*	T*	T*	T*
ø12	5	5	25	-	-
ø16	5	5	25	-	-
ø20	5	5	-	-	-
ø25	5	5	35	50	-
ø32	5	5	35	50	-
ø40	5	5	35	50	-
ø50	5	5	35	50	-
ø63	5	5	35	55	-
ø80	5	5	35	55	-
ø100	5	5	35	55	-

Note: Less than 10 mm with the 2-color display, off-delay, AC magnetic field proof, T1* or T8* switch is not available.

Switch specifications

● 1-color/2-color display/for AC magnetic field proof

Item	Proximity 2-wire				Proximity 3-wire				Reed 2-wire							Proximity 2-wire
	T1H/ T1V	T2H/T2V/ T2JH/T2JV	T2YH/ T2YV	T2WH/ T2WV	T3H/ T3V	T3PH/ T3PV	T3YH/ T3YV	T3WH/ T3WV	T0H/T0V		T5H/T5V		T8H/T8V			T2YD (*4) T2YDT
Applications	For programmable controller, relay, compact solenoid valve	Dedicated for programmable controller			For programmable controller, relay				For programmable controller, relay		For programmable controller, relay (no lamp), serial		For programmable controller, relay			Dedicated for programmable controller
Output method	-				NPN output	PNP output	NPN output	NPN output	-							
Pwr. supp. V.	-				10 to 28 VDC				-							
Load voltage	85 to 265 VAC	10 to 30 VDC		24 VDC ±10%	30 VDC or less				12/24 VDC	100/110 VAC	5/12/24 VDC	100/110 VAC	12/24 VDC	110 VAC	220 VAC	24 VDC ±10%
Load current	5 to 100 mA	5 to 20 mA (*3)			100 mA or less		50 mA or less		5 to 50 mA	7 to 20 mA	50 mA or less	20 mA or less	5 to 50 mA	7 to 20 mA	7 to 10 mA	5 to 20 mA
Indicator lamp	LED (Lit when ON)	LED (Lit when ON)	Red/green LED (Lit when ON)	Red/green LED (Lit when ON)	LED (Lit when ON)	Yellow LED (Lit when ON)	Red/green LED (Lit when ON)	Red/green LED (Lit when ON)	LED (Lit when ON)		Without indicator lamp		LED (Lit when ON)			Red/green LED (Lit when ON)
Leakage current	≤ 1 mA at 100 VAC, ≤ 2 mA at 200 VAC	1 mA or less			10 μA or less				0 mA							1 mA or less
Weight g	1 m:33 3 m:87 5 m:142	1 m:18 3 m:49 5 m:80	1 m:33 3 m:87 5 m:142	1 m:18 3 m:49 5 m:80	1 m:18 3 m:49 5 m:80		1 m:33 3 m:87 5 m:142	1 m:18 3 m:49 5 m:80	1 m:18 3 m:49 5 m:80				1 m:33 3 m:87 5 m:142			1 m:61 3 m:166 5 m:272

*1 : Refer to Ending Page 1 for detailed switch specifications and dimensions.
*2 : Switches other than the above models, such as switches with connectors, are also available. Refer to Ending Page 1.
*3 : The max. load current is 20 mA at 25°C. The current is lower than 20 mA if the operating ambient temperature around the switch is higher than 25°C. (5 to 10 mA at 60°C)
*4 : Switch for AC magnetic field (T2YD/T2YDT) cannot be used in DC magnetic field.

Cylinder weight table (the weight of the switches is when there are 2 cylinder switches.)

(Unit: g)

Stroke length (mm)	5		10		15		20		25		30		40		50	
Bore size (mm)	No switch	Switch	No switch	Switch	No switch	Switch	No switch	Switch	No switch	Switch	No switch	Switch	No switch	Switch	No switch	Switch
ø12	88	191	104	191	122	210	138	227	156	246	163	267	—	—	—	—
ø16	122	237	144	237	164	258	186	281	208	304	230	324	—	—	—	—
ø20	194	305	218	372	249	401	280	430	309	457	340	486	—	—	—	—
ø25	234	416	264	446	296	478	328	510	360	542	391	572	454	636	516	698
ø32	306	535	374	602	441	670	510	738	575	804	644	872	782	1006	919	1139
ø40	466	752	520	806	572	858	626	912	680	966	732	1028	838	1124	944	1230
ø50	757	1145	849	1237	941	1328	1033	1422	1125	1512	1218	1605	1402	1789	1589	1977
ø63	1279	1684	1409	2052	—	—	1669	2312	—	—	1929	2572	2191	2834	2451	3094
ø80	2332	2675	2536	2879	—	—	2942	3808	—	—	3348	4214	3756	4632	4162	5038
ø100	3633	4827	3916	5105	—	—	4480	5629	—	—	5046	6225	5610	6779	6176	7335

How to order

Without switch (without magnet for switch)

SSD-W — 12 ○ - 30 — N - 5 — M - I

Total stroke S1 — 1st stage stroke length S2

With switch (built-in magnet for switch)

SSD-WL - 12 ○ - 30 - T0H - R - N - 5 - T0H - R - M - I

Cylinder 1 — Cylinder 2

- A Model No.
- B Bore size
- C Port thread
- F Switch quantity
- G Option 1
- F Switch quantity
- H Option 2
- I Accessory
- D Stroke length
- E Switch model No. *2 *3 *8

Code	Description
A Model No.	
SSD-W	Double acting/two-stage
SSD-WL	Double acting/two-stage/with switch
SSD-WL1	ø12, ø16 2-color display, off-delay, with T1* switch
B Bore size (mm)	
12	ø12
16	ø16
20	ø20
25	ø25
32	ø32
40	ø40
50	ø50
63	ø63
80	ø80
100	ø100
C Port thread	
Blank	Rc thread
NN	NPT thread (ø32 and over) (made-to-order product)
GN	G thread (ø32 and over) (made-to-order product)
D Stroke length (mm)	
Refer to the stroke length table on the following page.	

E Switch model No.

Axial lead wire	Radial lead wire	Contact	Voltage AC	Voltage DC	Display	Lead wire
T0H*	T0V*	Reed	●	●	1-color display	2-wire
T5H*	T5V*	Reed	●	●	Without indicator lamp	2-wire
T8H*	T8V*	Reed	●	●	1-color display	2-wire
T1H*	T1V*	Proximity	●		1-color display	2-wire
T2H*	T2V*	Proximity		●	1-color display	2-wire
T3H*	T3V*	Proximity		●	1-color display	3-wire
T3PH*	T3PV*	Proximity		●	1-color display	3-wire
T2WH*	T2WV*	Proximity		●	2-color display	2-wire
T2YH*	T2YV*	Proximity		●	2-color display	2-wire
T3WH*	T3WV*	Proximity		●	2-color display	3-wire
T3YH*	T3YV*	Proximity		●	2-color display	3-wire
T2JH*	T2JV*	Proximity		●	1-color display off-delay	2-wire
T2YD*	-	Proximity		●	2-color display AC magnetic field	2-wire
T2YDT*	-	Proximity		●	2-color display AC magnetic field	2-wire
T2HR3	T2VR3	Proximity		●	1-color display (bend resist lead wire specs)	2-wire

* Lead wire length	
Blank	1 m (standard)
3	3 m (option)
5	5 m (option)

F Switch quantity	
R	1 on rod side
H	1 on head side
D	2

G Option 1	
Blank	Rod end female thread
N	Rod end male thread

H Option 2 *4	
M	Piston rod material (stainless steel)

I Accessory (available when rod end male thread "N" is selected)	
I	Rod eye
I2	Rod eye (compact)
Y	Rod clevis (pin and snap ring included)
Y2	Rod clevis (compact) (pin and snap ring included)

⚠ Precautions for model No. selection

*1 : As two cylinders are fastened at four positions from cylinder 2 (head side), they cannot be mounted at the head side. For mounting at the head side, made to order is available. Contact CKD separately.

*2 : Switches other than E Switch model No. are also available. (Made to order)
Refer to Ending Page 1 for details.

3 : An AC magnetic field proof switch cannot be installed on ø12 and ø16. In addition, T8 switch cannot be installed on ø12 to ø32.

*4 : Piston rod of ø12 to ø25 is stainless steel as standard. C type snap ring is stainless steel instead of steel. The rod end male thread nut is stainless steel.

*5 : Copper and PTFE free as standard for SSD-W12 to 50.

*6 : Refer to Ending Page 85 for custom specifications of rod end form.

*7 : Refer to pages 1086 and 1087 for combinations of variations/options.

*8 : Switches are shipped with the product. Contact CKD if assembling before shipment is necessary.

[Example of model No.]

SSD-WL-12-30-T0H-R-N-5-T0H-R-I

Model: Compact cylinder, two-stage

B Bore size	: ø12 mm	
C Port thread	: Rc thread	
D Total stroke length S1	: 30 mm	Cylinder 1
E Switch model No.	: Reed switch T0H, lead wire 1 m	Cylinder 1
F Switch quantity	: 1 included (on rod side)	Cylinder 1
G Option 1	: Rod end male thread	
D 1st stage stroke length S2	: 5 mm	Cylinder 2
2nd stage stroke length	: 25 mm	Cylinder 2
E Switch model No.	: Reed switch T0H, lead wire 1 m	Cylinder 2
F Switch quantity	: 1 on rod side	Cylinder 2
I Accessory	: Rod eye	

1st stage stroke length	5 mm	(S2)
+ 2nd stage stroke length	25 mm	
Total stroke	30 mm	(S1)

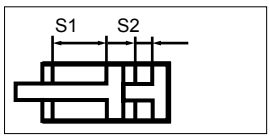

How to order switch

SW - **T0H**

Switch model No.
(Item Ⓔ on page 1212)

[Stroke length table]

Stroke length (mm)		Applicable bore size									
		ø12	ø16	ø20	ø25	ø32	ø40	ø50	ø63	ø80	ø100
Standard stroke length	5	●	●	●	●	●	●	●	●	●	●
	10	●	●	●	●	●	●	●	●	●	●
	15	●	●	●	●	●	●	●			
	20	●	●	●	●	●	●	●	●	●	●
	25	●	●	●	●	●	●	●			
	30	●	●	●	●	●	●	●	●	●	●
	40				●	●	●	●	●	●	●
	50				●	●	●	●	●	●	●
Min. stroke length (mm) *1		1									
Max. stroke length (mm)		30			50						
Custom stroke length *2		In 1 mm increments									

1 : Less than 5 mm with 1-color display switch and less than 10 mm with the 2-color display, off-delay, AC magnetic field proof, T1 or T8* switch are not available. Refer to page 1210 for the number of installed switches and the min. stroke length.
*2 : The total length is the same as that of the next longer standard stroke length.

Internal structure and parts list

● SSD-WL-12 to 25 (double acting/two-stage/with switch)

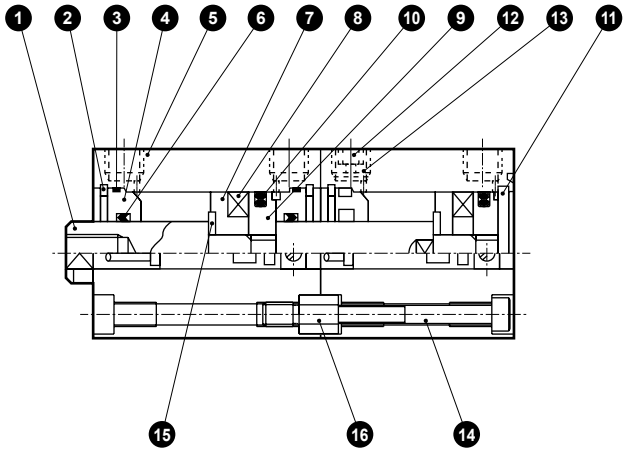

● SSD-WL-32 to 50 (double acting/two-stage/with switch)

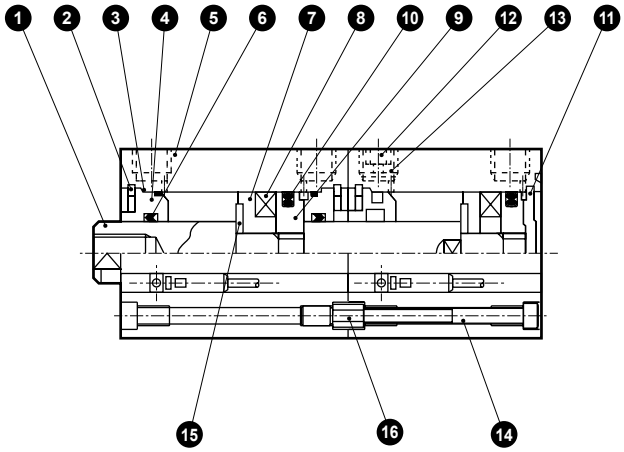

● SSD-W-12 to 25 (double acting/two-stage)

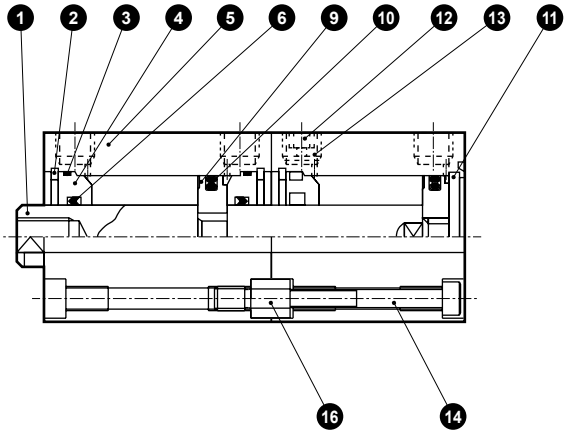

● SSD-W-32 to 50 (double acting/two-stage)

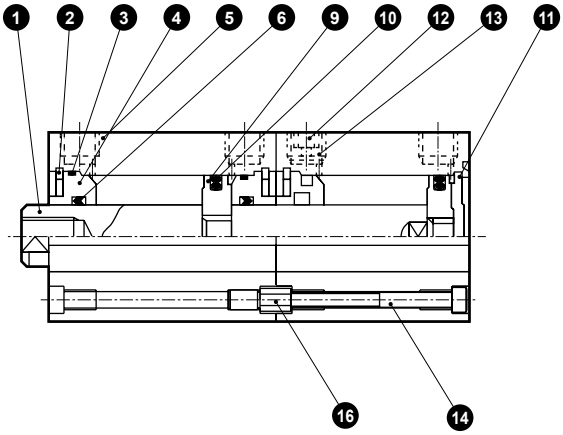

No.	Part name	Material	Remarks
1	Piston rod	ø12 to ø25: Stainless steel, ø32 to ø50: Steel	ø16 to ø50: Industrial chrome plating
2	C type snap ring	Steel	Zinc phosphate
3	Rod metal	Special aluminum	Alumite
4	Rod metal gasket	Nitrile rubber	
5	Body	Aluminum alloy	Hard alumite
6	Rod packing	Nitrile rubber	
7	Spacer	ø12: Aluminum alloy ø16 to ø50: Special resin	ø12: Chromate
8	Magnet	Plastic	

No.	Part name	Material	Remarks
9	Piston	Aluminum alloy	Chromate
10	Piston packing	Nitrile rubber	
11	Cover	ø12 to ø25: Stainless steel ø32 to ø50: Aluminum alloy	ø32 to ø50: Alumite
12	Plug	Stainless steel	
13	Stainless steel wire mesh	Stainless steel	
14	Hex socket screw	Steel	Black finish
15	Spacer washer	Stainless steel	ø12 to ø50
16	Connector	Steel	

Repair parts list

Bore size (mm)	Kit No.	Repair parts No.
ø12	SSD-W-12K	❹ ❻ ❿
ø16	SSD-W-16K	
ø20	SSD-W-20K	
ø25	SSD-W-25K	
ø32	SSD-W-32K	
ø40	SSD-W-40K	
ø50	SSD-W-50K	

SSD-W application examples

Pressure setting: P2 > P1

● 1st stage push
Keeping port 4 pressurized, pressurize port 1.

● 2nd stage push
Keeping port 1 pressurized, pressurize port 3.

It may not be P2 = P1 depending on the load direction. When using a single acting cylinder with free fall load, ports 2 and 4 in the upper figure and ports 2 and 3 in the lower figure are breathing holes.
Port 2, which basically needs no piping as a rule, is plugged with a filter.

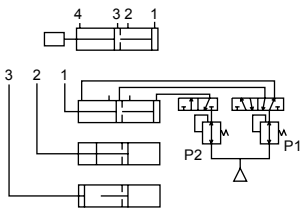

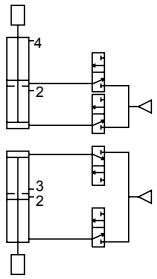

Internal structure and parts list

● SSD-WL-63 to 100 (double acting/two-stage/with switch)

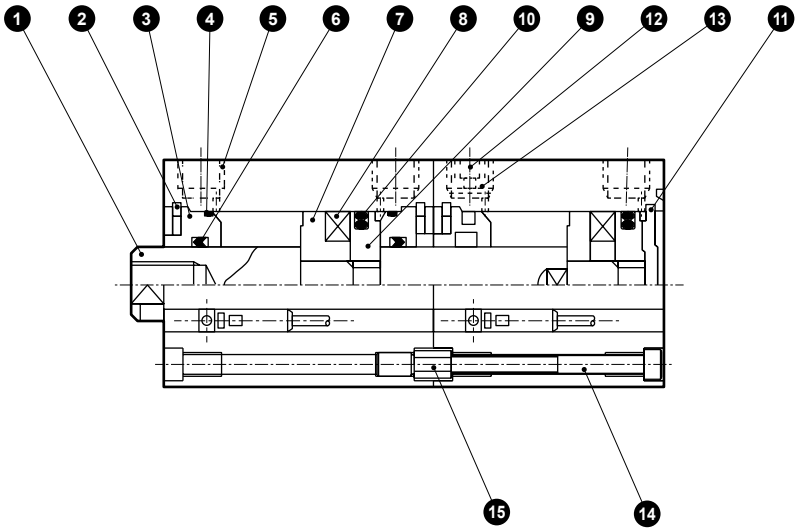

● SSD-W-63 to 100 (double acting/two-stage)

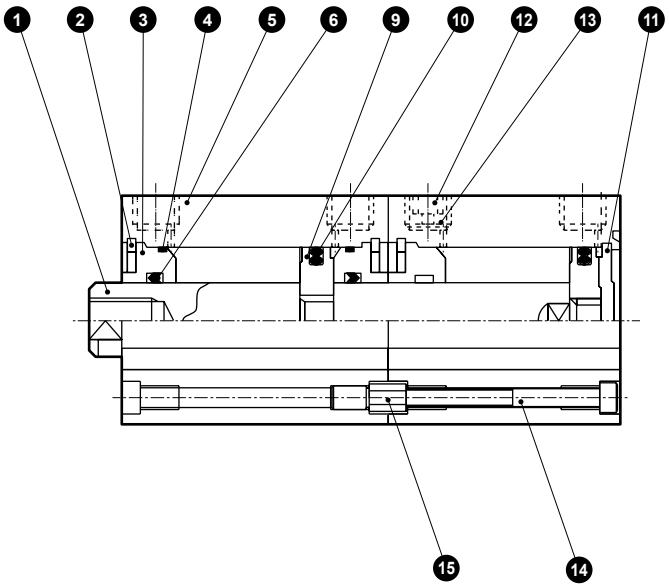

No.	Part name	Material	Remarks	No.	Part name	Material	Remarks
1	Piston rod	Steel	Industrial chrome plating	8	Magnet	Plastic	
2	C type snap ring	Steel	Zinc phosphate	9	Piston	Aluminum alloy	Chromate
3	Rod metal	Aluminum alloy	Alumite	10	Piston packing	Nitrile rubber	
4	Rod metal Gasket	Nitrile rubber		11	Cover	Aluminum alloy	Alumite
				12	Plug	Stainless steel	
5	Body	Aluminum alloy	Hard alumite	13	Stainless steel wire mesh	Stainless steel	
6	Rod packing	Nitrile rubber		14	Hex socket screw	Steel	Black finish
7	Spacer	Aluminum alloy	Chromate	15	Connector	Steel	

Repair parts list

Bore size (mm)	Kit No.	Repair parts No.
ø63	SSD-W-63K	❹ ❻ ❿
ø80	SSD-W-80K	
ø100	SSD-W-100K	

SCP*3
CMK2
CMA2
SCM
SCG
SCA2
SCS2
CKV2
CAV2/COVP/N2
SSD2
SSG
SSD
CAT
MDC2
MVC
SMG
MSD/MSDG
FC*
STK
SRL3
SRG3
SRM3
SRT3
MRL2
MRG2
SM-25
ShkAbs
FJ
FK
Spd Contr
Ending

Dimensions

● SSD-WL-12/16 (with switch)

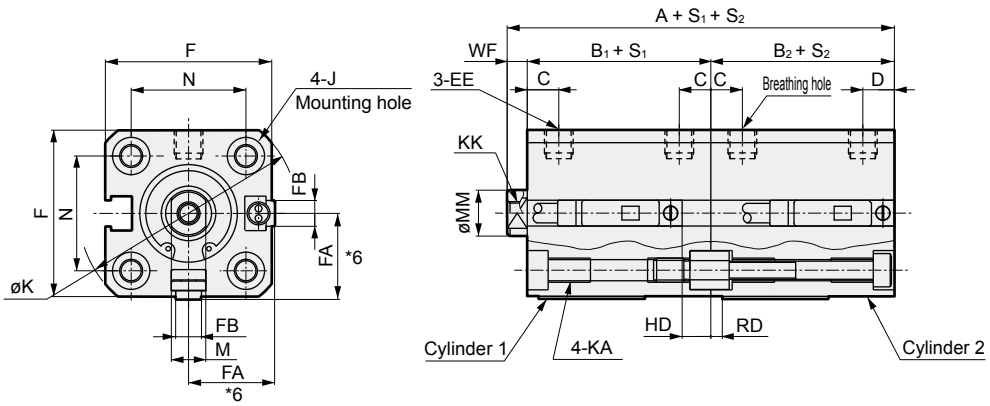

● Rod end male thread

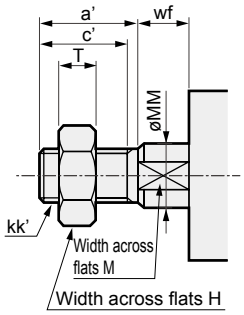

● SSD-W-12/16 (without switch)

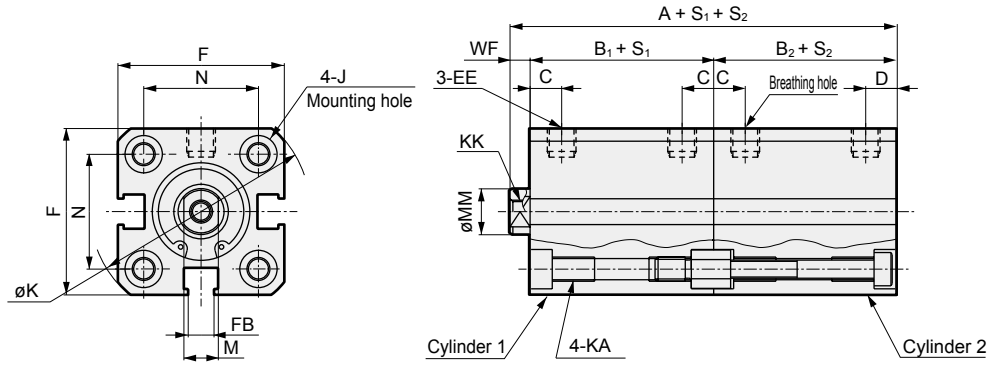

Code	Without switch			Common dimensions with switch																
Bore size (mm)	A *1	B_1 *1	B_2 *1	A *1	B_1 *1	B_2 *1	C	D	EE	F	FA *6	FB	J	K	KA	KK	M	MM	N	WF
ø12	42.5	22	17	52.5	27	22	5.5	5.5	M5	25	13(16.5)	4.5	6.5 spot face depth 3.5	32	M4 depth 7	M3 depth 6	5	6	15.5	3.5
ø16	42.5	22	17	52.5	27	22	5.5	5.5	M5	29	15(18.5)	4.5	6.5 spot face depth 3.5	38	M4 depth 7	M4 depth 8	6	8	20	3.5

Switch dimensions	Reed T0H/T0V, T5H/T5V			Proximity T2H/T2V, T3H/T3V T2WH/T2WV, T3WH/T3WV		
Bore size (mm)	HD_1 *2	HD_2 *2	RD *2	HD_1 *2	HD_2 *2	RD *2
ø12	5	0	2.5	5	0	2.5
ø16	5	0	2	5	0	2

● *1 : To calculate A + S_1 + S_2 or B_1 + S_1, B_2 + S_2 when using custom stroke length, apply the next longer standard stroke length (instead of the custom stroke length) to the stroke length value.
(Example) If the custom stroke length is 7 mm, apply the standard stroke length of 10 mm.

● *2 : HD and RD dimensions for 5 mm stroke length differ from these dimensions according to the setting.

● *3 : When the stroke length S_2 is 5 mm for ø12 or ø16 with switch, (B_2+S_2) and (A+S_1+S_2) are as shown in the table below.

Bore size	A + S_1 + S_2	B_1 + S_1	B_2 + S_2
ø12	62.5 + S_1	27 + S_1	32
ø16	62.5 + S_1	27 + S_1	32

S_1/S_2 with the custom stroke length are the same as those of the next longer standard stroke length.

● *4 : Refer to page 1316 for HD and RD dimensions for the 2-color display, off-delay, AC magnetic field proof, T1* and T8* switches.

● *5 : Refer to page 1316 for the protruding dimensions of the 2-color display, off-delay, AC magnetic field proof, T1* and T8* switches.

● *6 : Dimensions in ( ) of FA are for the radial lead wire.

● *7 : For dimensions of individual accessories, refer to pages 1108 to 1115.

Dimensions of rod end male thread

Code / Bore size (mm)	a'	c'	H	kk'	M	MM	T	wf
ø 12	10.5	9	8	M5	5	6	3.2	3.5
ø 16	12	10	10	M6	6	8	3.6	3.5

Dimensions

● SSD-WL-20/25 (with switch)

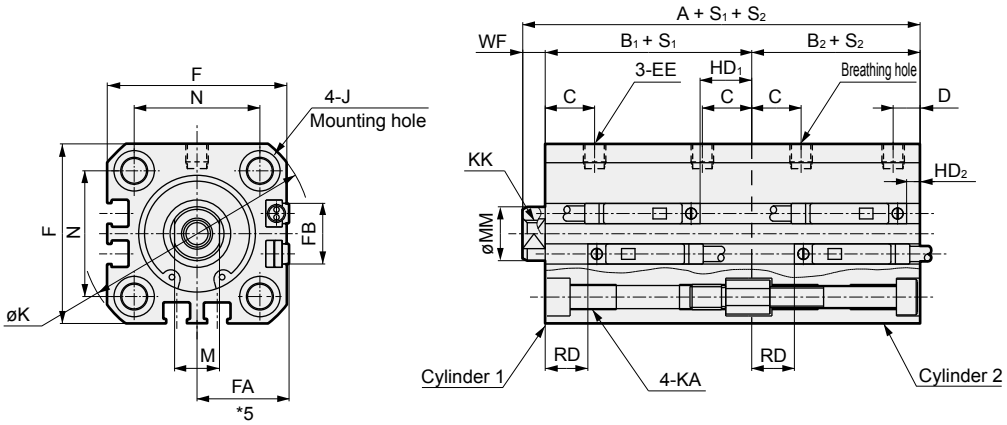

● Rod end male thread

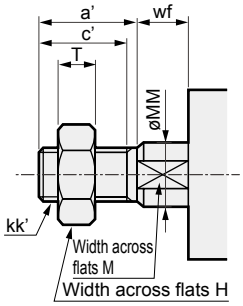

● SSD-W-20/25 (without switch)

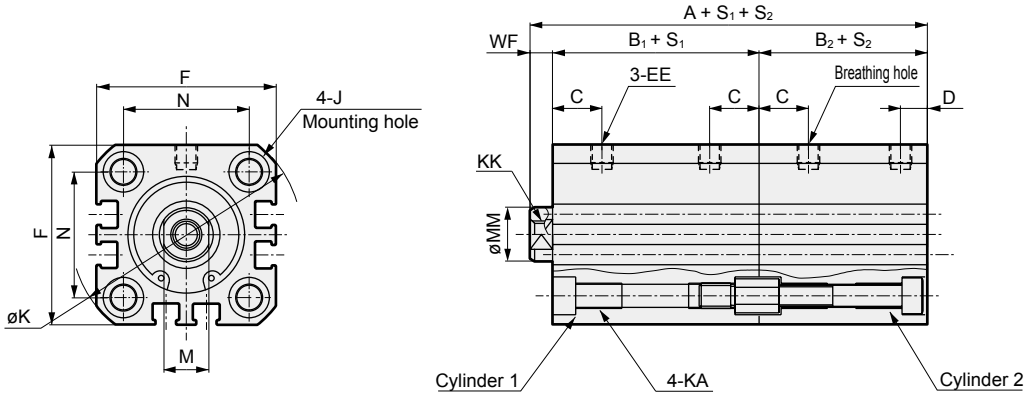

Code	Without switch			Common dimensions with switch																
Bore size (mm)	A *1	B1 *1	B2 *1	A *1	B1 *1	B2 *1	C	D	EE	F	FA *5	FB	J	K	KA	KK	M	MM	N	WF
ø20	50	26	19.5	70	36	29.5	8	5.5	M5	36	18.5(22)	12.5	9 spot face depth 5.5	47	M6 depth 11	M5 depth 7	8	10	25.5	4.5
ø25	58.5	31	22.5	78.5	41	32.5	11	6	M5	40	20.5(24)	13.5	9 spot face depth 5.5	51	M6 depth 11	M6 depth 12	10	12	28	5

Switch dimensions	Reed T0H/T0V, T5H/T5V			Proximity T2H/T2V, T3H/T3V T2WH/T2WV, T3WH/T3WV		
Bore size (mm)	HD1 *2	HD2 *2	RD *2	HD1 *2	HD2 *2	RD *2
ø20	9.5	3	6.5	9.5	3	6.5
ø25	11.5	3	9.5	11.5	3	9.5

● *1 : To calculate A + S_1 + S_2 or B_1 + S_1, B_2 + S_2 when using custom stroke length, apply the next longer standard stroke length (instead of the custom stroke length) to the stroke length value.
(Example) If the custom stroke length is 7 mm, apply the standard stroke length of 10 mm.

● *2 : HD and RD dimensions for 5 mm stroke length differ from these dimensions according to the setting.

● *3 : Refer to page 1316 for HD and RD dimensions for the 2-color display, off-delay, AC magnetic field proof, T1* and T8* switches.

● *4 : Refer to page 1316 for the protruding dimensions of the 2-color display, off-delay, AC magnetic field proof, T1* and T8* switches.

● *5 : Dimensions in ( ) of FA are for the radial lead wire.

● *6 : For dimensions of individual accessories, refer to pages 1108 to 1115.

Dimensions of rod end male thread

Code / Bore size (mm)	a'	c'	H	kk'	M	MM	T	wf
ø 20	14	12	13	M8	8	10	5	4.5
ø 25	17.5	15	17	M10×1.25	10	12	6	5

Dimensions

● SSD-WL-32 to 100 (with switch)

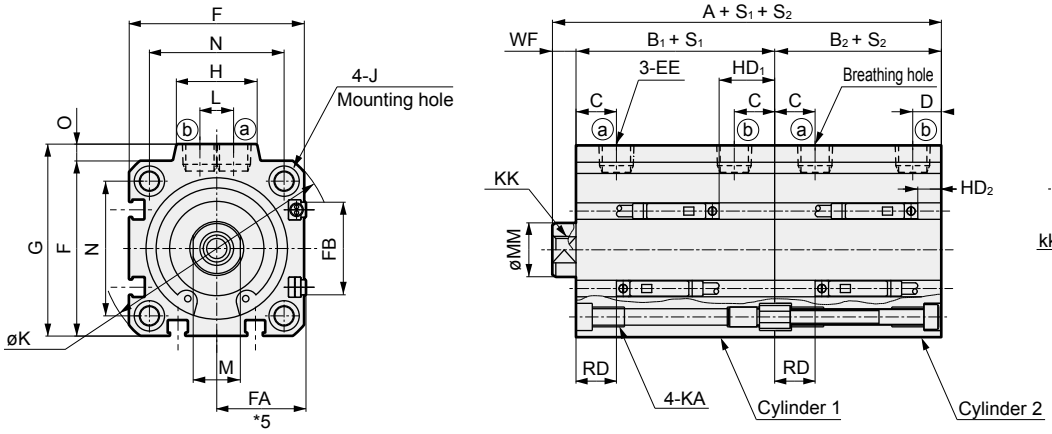

● Rod end male thread

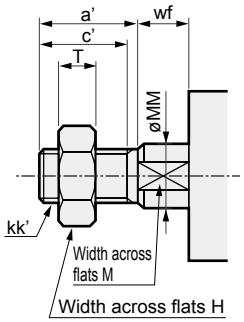

● SSD-W-32 to 100 (without switch)

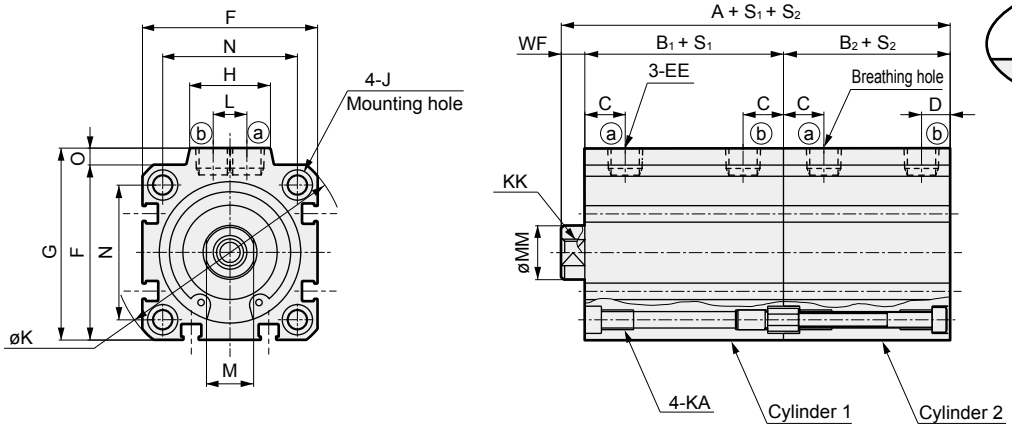

[Bore size ø100]

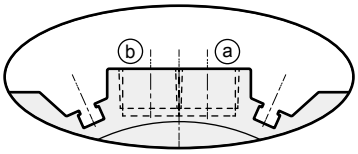

* Only for ø100, the port surface has switch grooves.

Code / Bore size (mm)	Without switch A *1	B1 *1	B2 *1	Common dimensions with switch A *1	B1 *1	B2 *1	C	D	EE	F	FA *5	FB	G	H	J	K	KA	KK	L	M	MM	N	O	WF
ø32	60.5	30.5	23	80.5	40.5	33	8	8	Rc1/8	45	23(26.5)	20.5	49.5	24	9 spot face depth 5.5	60	M6 depth 11	M8 depth 13	10	14	16	34	4.5	7
ø40	75.5	39	29.5	95.5	49	39.5	12	8.5	Rc1/8	52	26.5(30)	27.5	57	24	9 spot face depth 5.5	69	M6 depth 11	M8 depth 13	10	14	16	40	5	7
ø50	77.5	39	30.5	97.5	49	40.5	10.5	10.5	Rc1/4	64	32.5(36)	28.5	71	33	11 spot face depth 6.5	86	M8 depth 13	M10 depth 15	15	17	20	50	7	8
ø63	85	41	36	105	51	46	13	11	Rc1/4	77	39(42.5)	28.5	84	33	14 spot face depth 9	103	M10 depth 25	M10 depth 15	15	17	20	60	7	8
ø80	102	48.5	43.5	122	58.5	53.5	16	13	Rc3/8	98	49.5(53)	28.5	104	38	17.5 spot face depth 11	132	M12 depth 28	M16 depth 21	15	22	25	77	6	10
ø100	123	58	53	143	68	63	23	15	Rc3/8	117	59(62.5)	28.5	123.5	38	17.5 spot face depth 11	156	M12 depth 28	M20 depth 27	15	27	30	94	6.5	12

Switch dimensions / Bore size (mm)	Reed T0H/T0V, T5H/T5V HD1 *2	HD2 *2	RD *2	Proximity T2H/T2V, T3H/T3V T2WH/T2WV, T3WH/T3WV HD1 *2	HD2 *2	RD *2
ø32	11	3.5	9	11	3.5	9
ø40	16.5	7	12	16.5	7	12
ø50	16.5	7.5	12.5	16.5	7.5	12.5
ø63	18	12.5	13	18	12.5	13
ø80	23	17.5	15.5	23	17.5	15.5
ø100	28.5	23	19.5	28.5	23	19.5

- *1 : To calculate A + S_1 + S_2 or B_1 + S_1 + B_2 + S_2 when using custom stroke length, apply the next longer standard stroke length (instead of the custom stroke length) to the stroke length value.
  (Example) If the custom stroke length is 7 mm, apply the standard stroke length of 10 mm.
- *2 : HD and RD dimensions for 5 mm stroke length differ from these dimensions according to the setting.
- *3 : Refer to page 1317 for HD and RD dimensions of the 2-color display, off-delay, AC magnetic field proof, T1* and T8* switches.
- *4 : Refer to page 1317 for the protruding dimensions of the 2-color display, off-delay, AC magnetic field proof, T1* and T8* switches.
- *5 : Dimensions in ( ) of FA are for the radial lead wire.

Dimensions of rod end male thread

Code / Bore size (mm)	a'	c'	H	kk'	M	MM	T	wf
ø 32	23.5	20.5	22	M14×1.5	14	16	8	5
ø 40	23.5	20.5	22	M14×1.5	14	16	8	5
ø 50	28.5	26	27	M18×1.5	17	20	11	5
ø 63	28.5	26	27	M18×1.5	17	20	11	5
ø 80	35.5	32.5	32	M22×1.5	22	25	13	8
ø100	35.5	32.5	41	M26×1.5	27	30	16	8

* For dimensions of individual accessories, refer to pages 1108 to 1115.

MEMO

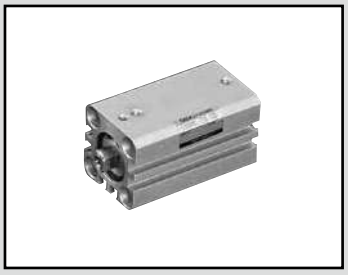

Compact cylinder double acting/rotation-stop

SSD-M Series

● Bore size: ø12/ø16/ø20/ø25/ø32/ø40/ø50/ø63

JIS symbol

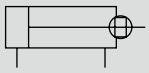

RoHS CAD

Specifications

1 MPa ≈ 145.0 psi, 1 MPa = 10 bar

Item	SSD-M SSD-ML (with switch)							
Bore size mm	ø12	ø16	ø20	ø25	ø32	ø40	ø50	ø63
Actuation	Double acting							
Working fluid	Compressed air							
Max. working pressure MPa	1.0 (≈150 psi, 10 bar)							
Min. working pressure MPa	0.1 (≈15 psi, 1 bar)							0.05
Proof pressure MPa	1.6 (≈230 psi, 16 bar)							
Ambient temperature °C	-10 (14°F) to 60 (140°F) (no freezing)							
Port size	M5				Rc1/8		Rc1/4	
Stroke tolerance mm	+1.0 0							
Working piston speed mm/s	50 to 500							50 to 300
Cushion	None							
Lubrication	Not required (use turbine oil ISO VG32 if necessary for lubrication)							
Non-rotating accuracy	±2°	±1.5°			±1°			
Allowable absorbed energy J	0.004	0.01	0.016	0.021	0.025	0.092	0.1	0.12

Stroke length

Bore size (mm)	Standard stroke length (mm)	Max. stroke length (mm)	Min. stroke length (mm)
ø12	5, 10, 15, 20, 25, 30	30	1
ø16			
ø20			
ø25	5, 10, 15, 20, 25, 30, 40, 50	50	
ø32			
ø40			
ø50			
ø63	5, 10, 20, 30, 40, 50	50	

*1) The custom stroke length is available in 1 mm increments. However, the total length is the same as that of the next longer standard stroke length.
2) When using the type with a switch, refer to the table below. Less than 10 mm with the 2-color display, off-delay, AC magnetic field proof, T1 or T8* switch is not available.

Number of installed switches and min. stroke length (mm)

Switch quantity	1	2	3	4	5
Switch model No. / Bore size (mm)	T*	T*	T*	T*	T*
ø12	5	5	25	-	-
ø16	5	5	25	-	-
ø20	5	5	-	-	-
ø25	5	5	35	50	-
ø32	5	5	35	50	-
ø40	5	5	35	50	-
ø50	5	5	35	50	-
ø63	5	5	35	50	-

Note: Less than 10 mm with the 2-color display, off-delay, AC magnetic field proof, T1* or T8* switch is not available.

Switch specifications

● 1-color/2-color display/for AC magnetic field proof

Item	Proximity 2-wire				Proximity 3-wire				Reed 2-wire							Proximity 2-wire
	T1H/ T1V	T2H/T2V/ T2JH/T2JV	T2YH/ T2YV	T2WH/ T2WV	T3H/ T3V	T3PH/ T3PV	T3YH/ T3YV	T3WH/ T3WV	T0H/T0V		T5H/T5V		T8H/T8V			T2YD (*4) T2YDT
Applications	For programmable controller, relay, compact solenoid valve	Dedicated for programmable controller			For programmable controller, relay				For programmable controller, relay		For programmable controller, relay (no lamp), serial		For programmable controller, relay			Dedicated for programmable controller
Output method	-				NPN output	PNP output	NPN output	NPN output	-							
Pwr. supp. V.	-				10 to 28 VDC				-							
Load voltage	85 to 265 VAC	10 to 30 VDC		24 VDC ±10%	30 VDC or less				12/24 VDC	100/110 VAC	5/12/24 VDC	100/110 VAC	12/24 VDC	110 VAC	220 VAC	24 VDC ±10%
Load current	5 to 100 mA	5 to 20 mA (*3)			100 mA or less		50 mA or less		5 to 50 mA	7 to 20 mA	50 mA or less	20 mA or less	5 to 50 mA	7 to 20 mA	7 to 10 mA	5 to 20 mA
Indicator lamp	LED (Lit when ON)	LED (Lit when ON)	Red/green LED (Lit when ON)	Red/green LED (Lit when ON)	LED (Lit when ON)	Yellow LED (Lit when ON)	Red/green LED (Lit when ON)	Red/green LED (Lit when ON)	LED (Lit when ON)		Without indicator lamp		LED (Lit when ON)			Red/green LED (Lit when ON)
Leakage current	≤ 1 mA at 100 VAC, ≤ 2 mA at 200 VAC	1 mA or less			10 μA or less				0 mA							1 mA or less
Weight g	1 m:33 3 m:87 5 m:142	1 m:18 3 m:49 5 m:80	1 m:33 3 m:87 5 m:142	1 m:18 3 m:49 5 m:80	1 m:18 3 m:49 5 m:80		1 m:33 3 m:87 5 m:142	1 m:18 3 m:49 5 m:80	1 m:18 3 m:49 5 m:80				1 m:33 3 m:87 5 m:142			1 m:61 3 m:166 5 m:272

*1 : Refer to Ending Page 1 for detailed switch specifications and dimensions.
*2 : Switches other than the above models, such as switches with connectors, are also available. Refer to Ending Page 1.
*3 : The max. load current is 20 mA at 25°C. The current is lower than 20 mA if the operating ambient temperature around the switch is higher than 25°C. (5 to 10 mA at 60°C)
*4 : Switch for AC magnetic field (T2YD/T2YDT) cannot be used in DC magnetic field.

Cylinder weight table (the weight of the switches is when there are 2 cylinder switches.)

(Unit: g)

Stroke length (mm)	5		10		15		20		25		30		40		50	
Bore size (mm)	No switch	Switch	No switch	Switch	No switch	Switch	No switch	Switch	No switch	Switch	No switch	Switch	No switch	Switch	No switch	Switch
ø12	44	94	52	94	61	103	69	111	78	120	80	122	-	-	-	-
ø16	58	114	69	114	79	124	90	135	101	146	112	157	-	-	-	-
ø20	76	131	88	163	101	176	114	189	126	201	139	214	-	-	-	-
ø25	102	193	117	208	133	224	149	240	165	256	180	271	212	303	243	334
ø32	166	280	188	302	210	324	232	346	253	367	275	389	319	433	362	476
ø40	210	353	237	380	263	406	290	433	317	460	343	486	396	539	449	592
ø50	341	535	383	577	425	619	467	661	509	703	552	746	636	830	720	914
ø63	507	786	562	841	-	-	672	951	-	-	782	1061	893	1172	1003	1282

Theoretical thrust table

(Unit: N)

Bore size (mm)	Operating direction	Working pressure MPa										
		0.1	0.15	0.2	0.3	0.4	0.5	0.6	0.7	0.8	0.9	1.0
ø12	Push	11.3	17.0	22.6	33.9	45.2	56.5	67.9	79.2	90.5	1.02×10^2	1.13×10^2
	Pull	8.48	12.7	17.0	25.4	33.9	42.4	50.9	59.4	67.9	76.3	84.8
ø16	Push	20.1	30.2	40.2	60.3	80.4	1.01×10^2	1.21×10^2	1.41×10^2	1.61×10^2	1.81×10^2	2.01×10^2
	Pull	15.1	22.6	30.2	45.2	60.3	75.4	90.5	1.06×10^2	1.21×10^2	1.36×10^2	1.51×10^2
ø20	Push	31.4	47.1	62.8	94.2	1.26×10^2	1.57×10^2	1.88×10^2	2.20×10^2	2.51×10^2	2.83×10^2	3.14×10^2
	Pull	23.6	35.3	47.1	70.7	94.2	1.18×10^2	1.41×10^2	1.65×10^2	1.88×10^2	2.12×10^2	2.36×10^2
ø25	Push	49.1	73.6	98.2	1.47×10^2	1.96×10^2	2.45×10^2	2.95×10^2	3.44×10^2	3.93×10^2	4.42×10^2	4.91×10^2
	Pull	37.8	56.7	75.6	1.13×10^2	1.51×10^2	1.89×10^2	2.27×10^2	2.64×10^2	3.02×10^2	3.40×10^2	3.78×10^2
ø32	Push	80.4	1.21×10^2	1.61×10^2	2.41×10^2	3.22×10^2	4.02×10^2	4.83×10^2	5.63×10^2	6.43×10^2	7.24×10^2	8.04×10^2
	Pull	60.3	90.5	1.21×10^2	1.81×10^2	2.41×10^2	3.02×10^2	3.62×10^2	4.22×10^2	4.83×10^2	5.43×10^2	6.03×10^2
ø40	Push	1.26×10^2	1.88×10^2	2.51×10^2	3.77×10^2	5.03×10^2	6.28×10^2	7.54×10^2	8.80×10^2	1.01×10^3	1.13×10^3	1.26×10^3
	Pull	1.06×10^2	1.58×10^2	2.11×10^2	3.17×10^2	4.22×10^2	5.28×10^2	6.33×10^2	7.39×10^2	8.44×10^2	9.50×10^2	1.06×10^3
ø50	Push	1.96×10^2	2.95×10^2	3.93×10^2	5.89×10^2	7.85×10^2	9.82×10^2	1.18×10^3	1.37×10^3	1.57×10^3	1.77×10^3	1.96×10^3
	Pull	1.65×10^2	2.47×10^2	3.30×10^2	4.95×10^2	6.60×10^2	8.25×10^2	9.90×10^2	1.15×10^3	1.32×10^3	1.48×10^3	1.65×10^3
ø63	Push	3.12×10^2	4.68×10^2	6.23×10^2	9.35×10^2	1.25×10^3	1.56×10^3	1.87×10^3	2.18×10^3	2.49×10^3	2.81×10^3	3.12×10^3
	Pull	2.80×10^2	4.20×10^2	5.61×10^2	8.41×10^2	1.12×10^3	1.40×10^3	1.68×10^3	1.96×10^3	2.24×10^3	2.52×10^3	2.80×10^3

How to order

Without switch (without magnet for switch)

SSD-M — 12 ○ - 5 — N - LB - I

With switch (built-in magnet for switch)

SSD-ML - 12 ○ - 5 - T0H - R - N - LB - I

2-color display/off-delay, with T1* switch (ø12/ø16 only)

SSD-ML1 - 12 ○ - 10 - T2YH - R - N - LB - I

Ⓐ Model No.
Ⓑ Bore size
Ⓒ Port thread
Ⓓ Stroke length
Ⓔ Switch model No. *1 *2 *10
Ⓕ Switch quantity
Ⓖ Option *3
Ⓗ Mounting bracket *5 *6
Ⓘ Accessory *7

Code	Description
Ⓐ Model No.	
SSD-M	Double acting/rotation-stop
SSD-ML	Double acting/rotation-stop/with switch
SSD-ML1	ø12, ø16 2-color display, off-delay, with T1* switch
Ⓑ Bore size (mm)	
12	ø12
16	ø16
20	ø20
25	ø25
32	ø32
40	ø40
50	ø50
63	ø63
Ⓒ Port thread	
Blank	Rc thread
NN	NPT thread (ø32 and over) (made-to-order product)
GN	G thread (ø32 and over) (made-to-order product)
Ⓓ Stroke length (mm)	
Refer to the stroke length table on the following page.	

Ⓔ Switch model No.

Axial lead wire	Radial lead wire	Contact	Voltage AC	Voltage DC	Display	Lead wire
TOH*	T0V*	Reed	●	●	1-color display	2-wire
T5H*	T5V*	Reed	●	●	Without indicator lamp	2-wire
T8H*	T8V*	Reed	●	●	1-color display	2-wire
T1H*	T1V*	Proximity	●		1-color display	2-wire
T2H*	T2V*	Proximity		●	1-color display	2-wire
T3H*	T3V*	Proximity		●	1-color display	3-wire
T3PH*	T3PV*	Proximity		●	1-color display	3-wire
T2WH*	T2WV*	Proximity		●	2-color display	2-wire
T2YH*	T2YV*	Proximity		●	2-color display	2-wire
T3WH*	T3WY*	Proximity		●	2-color display	3-wire
T3YH*	T3YV*	Proximity		●	2-color display	3-wire
T2JH*	T2JV*	Proximity		●	1-color display off-delay	2-wire
T2YD*	-	Proximity		●	2-color display AC magnetic field	2-wire
T2YDT*	-	Proximity		●	2-color display AC magnetic field	2-wire
T2HR3	T2VR3	Proximity		●	1-color display (bend resist lead wire specs)	2-wire

* Lead wire length	
Blank	1 m (standard)
3	3 m (option)
5	5 m (option)
Ⓕ Switch quantity	
R	1 on rod side
H	1 on head side
D	2
Ⓖ Option	
Blank	Rod end female thread
N	Rod end male thread
M	Piston rod material (stainless steel) (made to order (ø32 to ø63))
Ⓗ Mounting bracket	
LB	Axial foot
LB2	Axial foot (compact)
CB	Clevis bracket (pin and snap ring included)
CB2	Clevis bracket (compact) (pin and snap ring included)
FA	Rod side flange
FB	Head side flange
Ⓘ Accessory (available when rod end male thread "N" is selected)	
I	Rod eye
I2	Rod eye (compact)
Y	Rod clevis (pin and snap ring included)
Y2	Rod clevis (compact) (pin and snap ring included)

⚠ Precautions for model No. selection

*1 : Switches other than Ⓔ Switch model No. are also available. (Made to order) Refer to Ending Page 1 for details.
2 : An AC magnetic field proof switch cannot be installed on ø12 and ø16. In addition, T8 switch cannot be installed on ø12 to ø32.
*3 : Piston rod of ø12 to ø25 is stainless steel as standard. C type snap ring is stainless steel instead of steel. The rod end male thread nut is stainless steel.
*4 : Copper and PTFE free as standard for SSD-M-12 to 25.
*5 : The mounting bracket is included at shipment.
*6 : The projection dimension of piston rod WF when LB2 or FA is selected is different from that of the standard. Refer to the dimensions on pages 1109 and 1110. The number of the specified protruding dimension will be added at the end of the model No. printed on the metal plate on the body.
*7 : "I" and "Y" cannot be selected together.
*8 : Refer to Ending Page 85 for custom specifications of rod end form.
*9 : Refer to pages 1086 and 1087 for combinations of variations/options.
*10 : Switches are shipped with the product. Contact CKD if assembling before shipment is necessary.

[Example of model No.]

SSD-ML-12-5-T0H-R-N

Model: Compact cylinder rotation-stop

Ⓑ Bore size : ø12 mm
Ⓒ Port thread : Rc thread
Ⓓ Stroke length : 5 mm
Ⓔ Switch model No. : Reed T0H switch
Ⓕ Switch quantity : 1 on rod side
Ⓖ Option : Rod end male thread

How to order switch

SW - **T0H**

Switch model No.
(Item Ⓔ on page 1222)

(Stroke length table)

Stroke length (mm)		Applicable bore size							
		ø12	ø16	ø20	ø25	ø32	ø40	ø50	ø63
Standard stroke length	5	●	●	●	●	●	●	●	●
	10	●	●	●	●	●	●	●	●
	15	●	●	●	●	●	●	●	
	20	●	●	●	●	●	●	●	●
	25	●	●	●	●	●	●	●	
	30	●	●	●	●	●	●	●	●
	40				●	●	●	●	●
	50				●	●	●	●	●
Min. stroke length (mm) *1		1							
Max. stroke length (mm)		30			50				
Custom stroke length *2		In 1 mm increments							

1 : Less than 5 mm for 1-color display switch and less than 10 mm for the 2-color display, off-delay, AC magnetic field proof, T1 or T8* switch are not available. Refer to page 1220 for the number of installed switches and the min. stroke length.
*2 : The total length is the same as that of the next longer standard stroke length.

How to order mounting bracket

Bore size (mm) / Mounting bracket	ø12	ø16	ø20	ø25	ø32	ø40	ø50	ø63
Foot (LB)	SSD-LB-12	SSD-LB-16	SSD-LB-20	SSD-LB-25	SSD-LB-32	SSD-LB-40	SSD-LB-50	SSD-LB-63
Foot (LB2)	SSD-LB2-12	SSD-LB2-16	SSD-LB2-20	SSD-LB2-25	SSD-LB2-32	SSD-LB2-40	SSD-LB2-50	SSD-LB2-63
Flange (FA/FB)	SSD-FA-12	SSD-FA-16	SSD-FA-20	SSD-FA-25	SSD-FA-32	SSD-FA-40	SSD-FA-50	SSD-FA-63
Clevis bracket (CB)	SSD-CB-12	SSD-CB-16	SSD-CB-20	SSD-CB-25	SSD-CB-32	SSD-CB-40	SSD-CB-50	SSD-CB-63
Clevis bracket (CB2)	SSD-CB2-12	SSD-CB2-16	SSD-CB2-20	SSD-CB2-25	SSD-CB2-32	SSD-CB2-40	SSD-CB2-50	SSD-CB2-63

*1: The foot mounting bracket is provided as 2 pcs./set.

Internal structure and parts list

● SSD-ML-12 to 25 (double acting/rotation-stop/with switch)

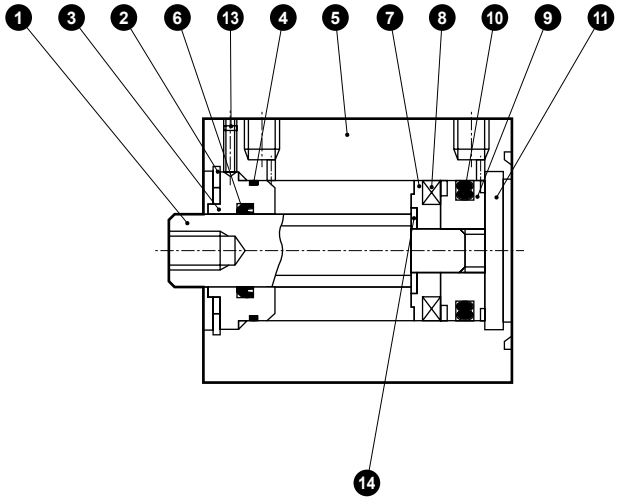

● SSD-M-12 to 25 (double acting/rotation-stop)

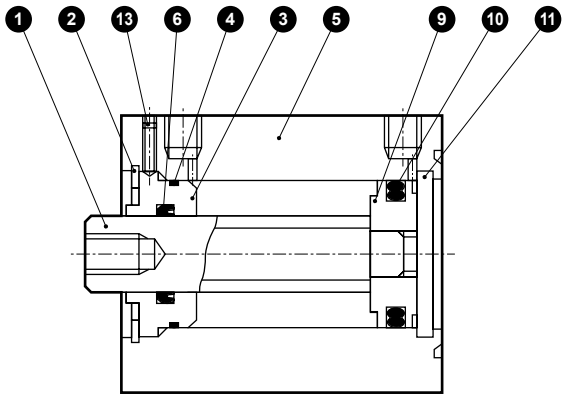

No.	Part name	Material	Remarks
1	Piston rod	Stainless steel	
2	C type snap ring	Steel	Zinc phosphate
3	Rod metal	Special aluminum	Alumite
4	Rod metal gasket	Nitrile rubber	
5	Body	Aluminum alloy	Hard alumite
6	Rod packing	Nitrile rubber	
7	Spacer	ø12: Aluminum alloy ø16 to ø25: Special resin	ø12: Chromate

No.	Part name	Material	Remarks
8	Magnet	Plastic	
9	Piston	Aluminum alloy	Chromate
10	Piston packing	Nitrile rubber	
11	Cover	Stainless steel	
13	Hexagon socket set screw	Steel	
14	Spacer washer	Stainless steel	ø20 to ø25

Repair parts list

Bore size (mm)	Kit No.	Repair parts No.
ø12	SSD-M-12K	4 6 10
ø16	SSD-M-16K	
ø20	SSD-M-20K	
ø25	SSD-M-25K	

Internal structure and parts list

● SSD-ML-32 to 63 (double acting/rotation-stop/with switch)

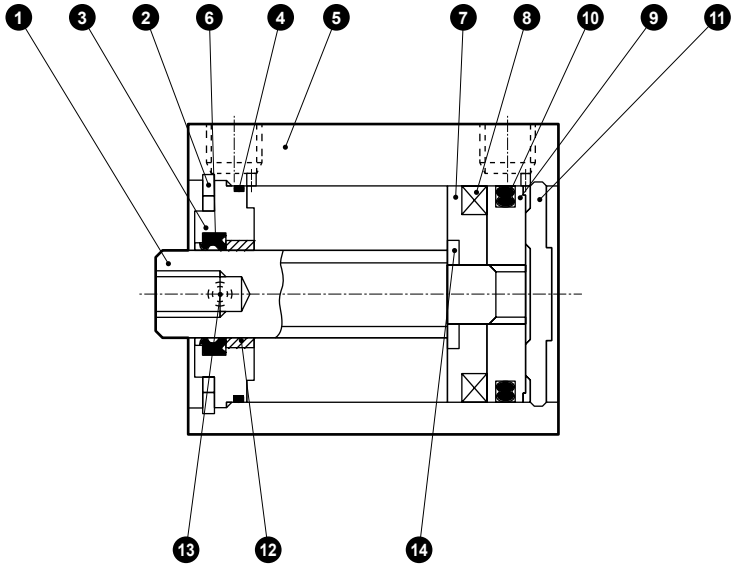

● SSD-M-32 to 63 (double acting/rotation-stop)

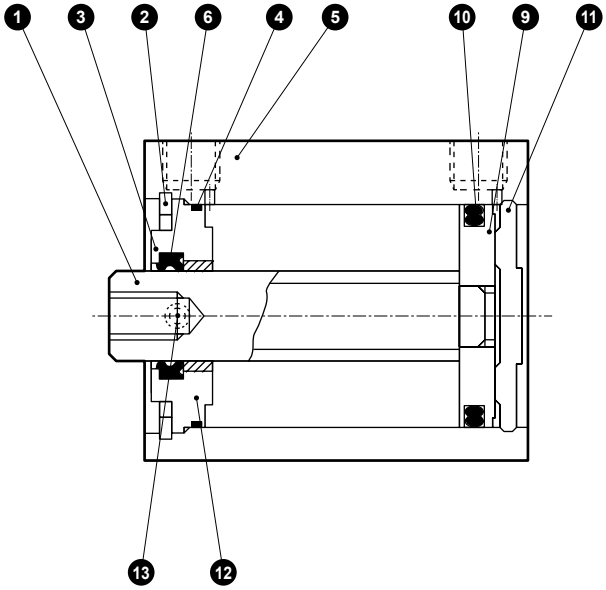

No.	Part name	Material	Remarks
1	Piston rod	Steel	Industrial chrome plating
2	C type snap ring	Steel	Zinc phosphate
3	Rod metal	ø32 to ø50: Special aluminum ø63: Aluminum alloy	Alumite
4	Rod metal gasket	Nitrile rubber	
5	Body	Aluminum alloy	Hard alumite
6	Rod packing	Nitrile rubber	
7	Spacer	ø32 to ø50: Special resin ø63: Aluminum alloy	ø63: Chromate

No.	Part name	Material	Remarks
8	Magnet	Plastic	
9	Piston	Aluminum alloy	Chromate
10	Piston packing	Nitrile rubber	
11	Cover	Aluminum alloy	Alumite
12	Bush	Oil impregnated bearing alloy	
13	Hexagon socket set screw	Steel	
14	Spacer washer	Stainless steel	ø32 to ø50

Repair parts list

Bore size (mm)	Kit No.	Repair parts No.
ø32	SSD-M-32K	❹ ❻ ❿
ø40	SSD-M-40K	
ø50	SSD-M-50K	
ø63	SSD-M-63K	

SCP*3
CMK2
CMA2
SCM
SCG
SCA2
SCS2
CKV2
CAV2/COVP/N2
SSD2
SSG
SSD
CAT
MDC2
MVC
SMG
MSD/MSDG
FC*
STK
SRL3
SRG3
SRM3
SRT3
MRL2
MRG2
SM-25
ShkAbs
FJ
FK
Spd Contr
Ending

Dimensions

● SSD-ML-12 to 25 (with switch)

ø12/ø16

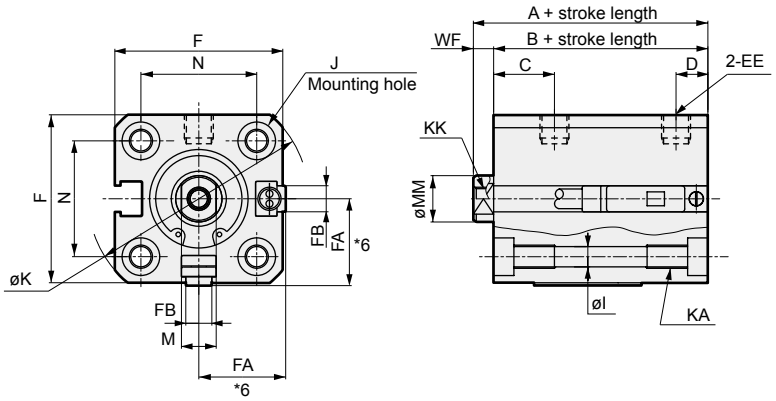

● Rod end male thread

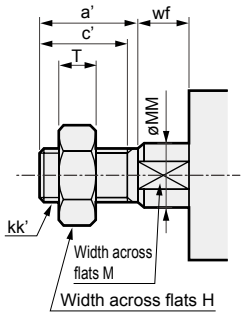

ø20/ø25

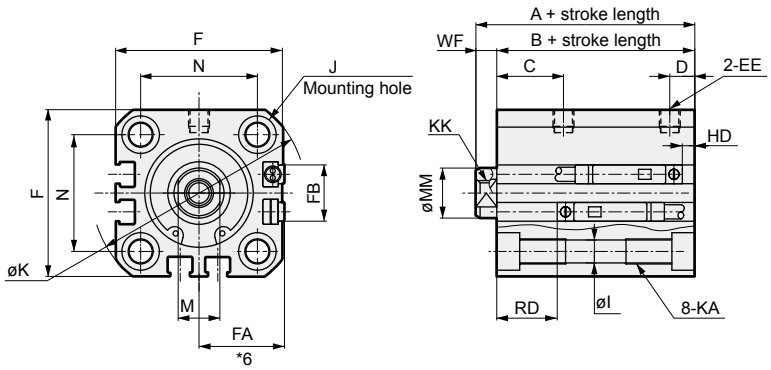

Code / Bore size (mm)	Common dimensions with switch																
	A *1	B *1	C	D	EE	F	FA *6	FB	I	J	K	KA	KK	M	MM	N	WF
ø12	30.5	27	10.5	5.5	M5	25	13(16.5)	4.5	3.5	6.5 spot face depth 3.5	32	M4 depth 7	M3 depth 6	5	6	15.5	3.5
ø16	30.5	27	10.5	5.5	M5	29	15(18.5)	4.5	3.5	6.5 spot face depth 3.5	38	M4 depth 7	M4 depth 8	6	8	20	3.5
ø20	39	34.5	13	5.5	M5	36	18.5(22)	12.5	5.5	9 spot face depth 5.5	47	M6 depth 11	M5 depth 7	8	10	25.5	4.5
ø25	42.5	37.5	16	6	M5	40	20.5(24)	13.5	5.5	9 spot face depth 5.5	51	M6 depth 11	M6 depth 12	10	12	28	5

Switch dimensions / Bore size (mm)	Reed T0H/T0V, T5H/T5V		Proximity T2H/T2V, T3H/T3V T2WH/T2WV, T3WH/T3WV	
	HD *2	RD *2	HD *2	RD *2
ø12	0	7.5	0	7.5
ø16	0	7	0	7
ø20	3	11.5	3	11.5
ø25	3	14.5	3	14.5

Table 1

Bore size	A + stroke length	B + stroke length
ø12	40.5	37
ø16	40.5	37

- *1: To calculate A+ stroke length or B+ stroke length when using custom stroke length, apply the next longer standard stroke length (instead of the custom stroke length) to the stroke length value.
  (Example) If the custom stroke length is 7 mm, apply the standard stroke length of 10 mm.
- *2 : HD and RD dimensions for 5 mm stroke length differ from these dimensions according to the setting.
- *3 : When the stroke length is 5 mm for ø12 and ø16 with switch, (A+ stroke) length and (B+ stroke) length are as shown in Table 1.
- *4: Refer to page 1312 for HD and RD dimensions of the 2-color display, off-delay, AC magnetic field proof, T1* and T8* switches.
- *5: Refer to page 1312 for the protruding dimensions of the 2-color display, off-delay, AC magnetic field proof, T1* and T8* switches.
- *6 : Dimensions in ( ) of FA are for the radial lead wire.
- *7: For dimensions of individual accessories, refer to pages 1108 to 1115.

Dimensions of rod end male thread

Code / Bore size (mm)	a'	c'	H	kk'	M	MM	T	wf
ø 12	10.5	9	8	M5	5	6	3.2	3.5
ø 16	12	10	10	M6	6	8	3.6	3.5
ø 20	14	12	13	M8	8	10	5	4.5
ø 25	17.5	15	17	M10×1.25	10	12	6	5

Dimensions

● SSD-M-12 to 25 (without switch)

ø12/ø16

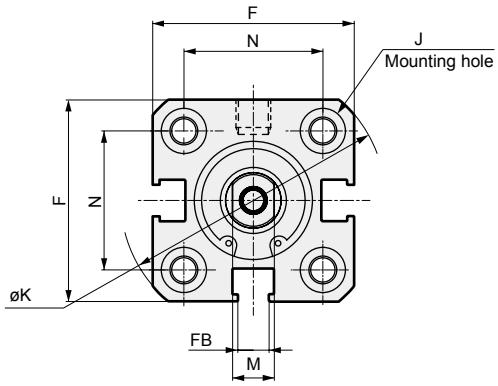

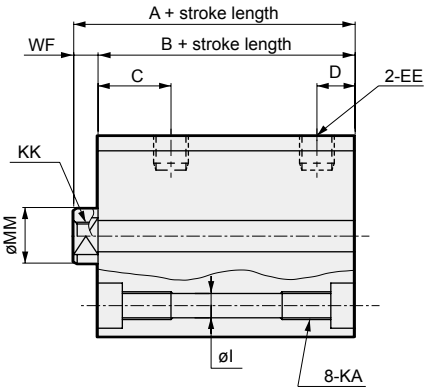

● Rod end male thread

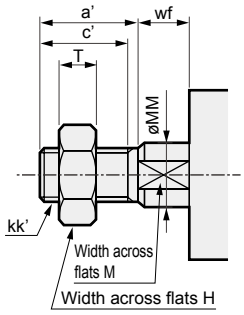

ø20/ø25

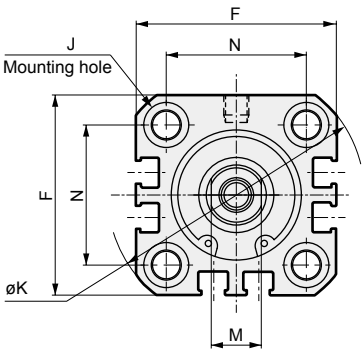

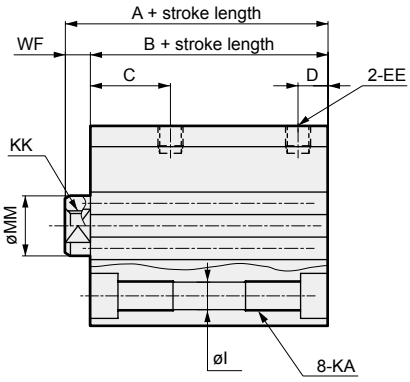

Code / Bore size (mm)	Without switch														
	A *1	B *1	C	D	EE	F	I	J	K	KA	KK	M	MM	N	WF
ø12	25.5	22	10.5	5.5	M5	25	3.5	6.5 spot face depth 3.5	32	M4 depth 7	M3 depth 6	5	6	15.5	3.5
ø16	25.5	22	10.5	5.5	M5	29	3.5	6.5 spot face depth 3.5	38	M4 depth 7	M4 depth 8	6	8	20	3.5
ø20	29	24.5	13	5.5	M5	36	5.5	9 spot face depth 5.5	47	M6 depth 11	M5 depth 7	8	10	25.5	4.5
ø25	32.5	27.5	16	6	M5	40	5.5	9 spot face depth 5.5	51	M6 depth 11	M6 depth 12	10	12	28	5

*1 : To calculate A+ stroke length or B+ stroke length when using custom stroke length, apply the next longer standard stroke length (instead of the custom stroke length) to the stroke length value.
(Example) If the custom stroke length is 7 mm, apply the standard stroke length of 10 mm.
*2 : Refer to pages 1320 to 1325 for dimensions including the accessories and pages 1108 to 1115 for dimensions of individual accessories.

Dimensions of rod end male thread

Code / Bore size (mm)	a'	c'	H	kk'	M	MM	T	wf
ø 12	10.5	9	8	M5	5	6	3.2	3.5
ø 16	12	10	10	M6	6	8	3.6	3.5
ø 20	14	12	13	M8	8	10	5	4.5
ø 25	17.5	15	17	M10×1.25	10	12	6	5

SCP*3
CMK2
CMA2
SCM
SCG
SCA2
SCS2
CKV2
CAV2/ COVP/N2
SSD2
SSG
SSD
CAT
MDC2
MVC
SMG
MSD/ MSDG
FC*
STK
SRL3
SRG3
SRM3
SRT3
MRL2
MRG2
SM-25
ShkAbs
FJ
FK
Spd Contr
Ending

Dimensions

● SSD-ML-32 to 63 (with switch)

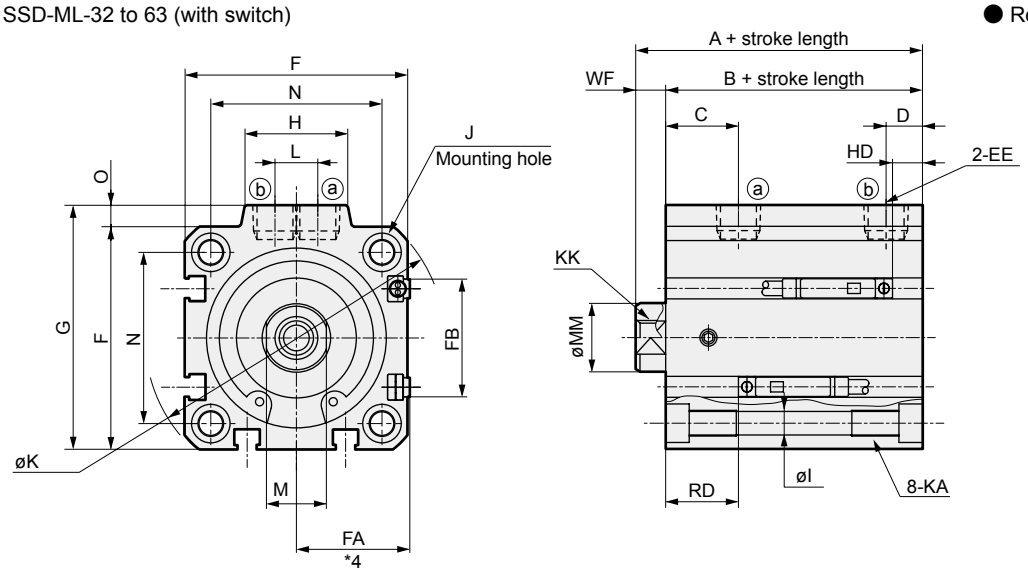

● Rod end male thread

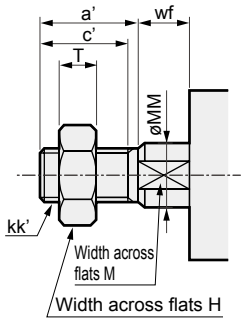

● SSD-M-32 to 63 (without switch)

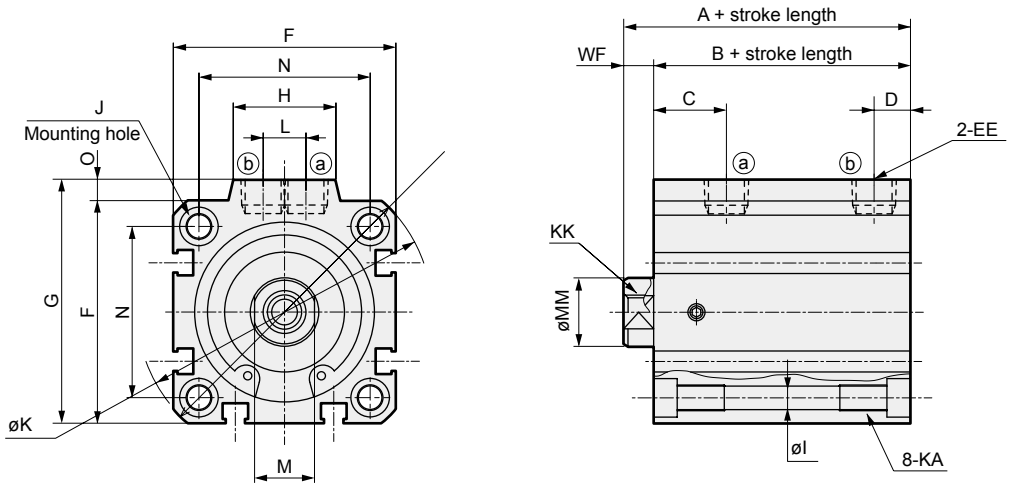

Code / Bore size (mm)	Without switch A *1	Without switch B *1	A	B	C	D	EE	F	FA *4	FB	G	H	I	J	K	KA	KK	L	M	MM	N	O	WF
ø32	40	33	50	43	18	8	Rc1/8	45	23(26.5)	20.5	49.5	24	5.5	9 spot face Depth 5.5	60	M6 depth 11	M8 depth 13	10	14	16	34	4.5	7
ø40	41.5	34.5	51.5	44.5	17	8.5	Rc1/8	52	26.5(30)	27.5	57	24	5.5	9 spot face Depth 5.5	69	M6 depth 11	M8 depth 13	10	14	16	40	5	7
ø50	43.5	35.5	53.5	45.5	15.5	10.5	RC1/4	64	32.5(36)	28.5	71	33	6.9	11 spot face Depth 6.5	86	M8 depth 13	M10 depth 15	15	18	20	50	7	8
ø63	49	41	59	51	18	11	Rc1/4	77	39(42.5)	28.5	84	33	8.7	14 spot face Depth 9	103	M10 depth 25	M10 depth 15	15	18	20	60	7	8

Switch dimensions / Bore size (mm)	Reed T0H/T0V, T5H/T5V HD *2	Reed T0H/T0V, T5H/T5V RD *2	Proximity T2H/T2V, T3H/T3V T2WH/T2WV, T3WH/T3WV HD *2	Proximity T2H/T2V, T3H/T3V T2WH/T2WV, T3WH/T3WV RD *2
ø32	3.5	19	3.5	19
ø40	7	17	7	17
ø50	7.5	17.5	7.5	17.5
ø63	12.5	17.5	12.5	17.5

- *1: To calculate A+ stroke length or B+ stroke length when using custom stroke length, apply the next longer standard stroke length (instead of the custom stroke length) to the stroke length value.
  (Example) If the custom stroke length is 7 mm, apply the standard stroke length of 10 mm.
- *2: Refer to page 1313 for HD and RD dimensions of the 2-color display, off-delay, AC magnetic field proof, T1* and T8* switches.
- *3: Refer to page 1313 for the protruding dimensions of the 2-color display, off-delay, AC magnetic field proof, T1* and T8* switches.
- *4 : Dimensions in ( ) of FA are for the radial lead wire.

Dimensions of rod end male thread

Code / Bore size (mm)	a'	c'	H	kk'	M	MM	T	wf
ø 32	23.5	20.5	22	M14×1.5	14	16	8	5
ø 40	23.5	20.5	22	M14×1.5	14	16	8	5
ø 50	28.5	26	27	M18×1.5	18	20	11	5
ø 63	28.5	26	27	M18×1.5	18	20	11	5

* For dimensions of individual accessories, refer to pages 1108 to 1115.

MEMO

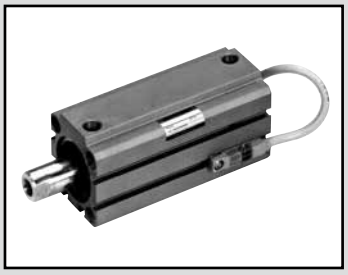

Compact cylinder double acting/coolant proof

SSD-G2/G3 Series

● Bore size: ø16/ø20/ø25/ø32/ø40/ø50/ø63/ø80/ø100

JIS symbol

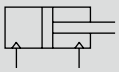

RoHS CAD

Specifications

Item	SSD-G2/G3 SSD-G2L/G3L (with switch)								
Bore size mm	ø16	ø20	ø25	ø32	ø40	ø50	ø63	ø80	ø100
Actuation	Double acting								
Working fluid	Compressed air								
Max. working pressure MPa	1.0 (≈150 psi, 10 bar)								
Min. working pressure MPa	0.15 (≈22 psi, 1.5 bar)						0.1 (≈15 psi, 1 bar)		
Proof pressure MPa	1.6 (≈230 psi, 16 bar)								
Ambient temperature °C	-10 (14°F) to 60 (140°F) (no freezing)								
Port size	M5			Rc1/8		Rc1/4		Rc3/8	
Stroke tolerance mm	$^{+1.0}_{0}$								
Working piston speed mm/s	50 to 500						50 to 300		
Cushion	None								
Lubrication	Not required (use turbine oil class 1 ISO VG32 if necessary for lubrication)								

Stroke length

Bore size (mm)	Standard stroke length (mm)	Max. stroke length (mm)	Min. stroke length (mm)	
			Without switch	With switch
ø16,ø20	5, 10, 15, 20, 25, 30	30	1	10
ø25,ø32 ø40,ø50	5, 10, 15, 20, 25 30, 40, 50	50		
ø63,ø80,ø100	5, 10, 20, 30, 40, 50	50		

*1: The custom stroke length is available in 1 mm increments. (Less than 10 mm with switch is not available.) However, the total length is the same as that of the next longer standard stroke length.

*2: Refer to pages 1320 and 1321 for the min. stroke length with mounting brackets LB and LB2.

Number of installed switches and min. stroke length (mm)

Switch quantity	1	2	3	4	5
Switch model No. / Bore size (mm)	T*	T*	T*	T*	T*
ø16	10	10	25	-	-
ø20	10	10	-	-	-
ø25	10	10	35	50	-
ø32	10	10	35	50	-
ø40	10	10	35	50	-
ø50	10	10	35	50	-
ø63	10	10	35	50	-
ø80	10	10	35	50	-
ø100	10	10	35	50	-

Switch specifications

● Proximity switch

Type/model No.	Proximity/2-wire	Proximity/3-wire
Item	T2YLH/T2YLV	T3YLH/T3YLV
Applications	Dedicated for programmable controller	Programmable controller, relay
Power supply voltage	-	10 to 28 VDC
Load voltage/current	10 to 30 VDC, 5 to 20 mA (*1)	30 VDC or less, 50 mA or less
Indicator lamp	Red/green LED (Lit when ON)	
Leakage current	1 mA or less	10 μA or less
Shock resistance	980 m/S^2	
Weight g	1 m:33 3 m:87 5 m:142	

*1: The above max. load current is 20 mA at 25°C. The current is lower than 20 mA if the operating ambient temperature around the switch is higher than 25˚C. (5 to 10 mA at 60˚C)

Cylinder weight table (the weight of the switches is when there are 2 cylinder switches.)

(Unit: g)

Stroke length	5		10		15		20		25		30		40		50	
Bore size (mm)	No switch	Switch	No switch	Switch	No switch	Switch	No switch	Switch	No switch	Switch	No switch	Switch	No switch	Switch	No switch	Switch
ø16	62	118	73	118	83	158	94	139	105	150	116	161				
ø20	108	163	120	195	133	208	146	221	158	233	171	246				
ø25	151	242	166	257	182	273	198	289	214	305	229	320	261	352	292	383
ø32	230	344	252	366	274	388	296	410	317	431	339	453	383	497	426	540
ø40	301	444	328	471	354	497	381	524	408	551	434	577	487	630	540	683
ø50	471	665	513	707	555	749	597	791	639	833	682	876	766	960	850	1044
ø63	678	957	733	1012			843	1122			953	1232	1064	1343	1174	1453
ø80	1445	1858	1532	1945			1705	2118			1878	2288	2052	2465	2225	2638
ø100	2098	2665	2212	2779			2439	3006			2667	3234	2894	3461	3122	3689

Theoretical thrust table

(Unit: N)

Bore size (mm)	Operating direction	Working pressure MPa										
		0.1	0.15	0.2	0.3	0.4	0.5	0.6	0.7	0.8	0.9	1.0
ø16	Push	-	30.2	40.2	60.3	80.4	1.01×10^2	1.21×10^2	1.41×10^2	1.61×10^2	1.81×10^2	2.01×10^2
	Pull	-	22.6	30.2	45.2	60.3	75.4	90.5	1.06×10^2	1.21×10^2	1.36×10^2	1.51×10^2
ø20	Push	-	47.1	62.8	94.2	1.26×10^2	1.57×10^2	1.88×10^2	2.20×10^2	2.51×10^2	2.83×10^2	3.14×10^2
	Pull	-	35.3	47.1	70.7	94.2	1.18×10^2	1.41×10^2	1.65×10^2	1.88×10^2	2.12×10^2	2.36×10^2
ø25	Push	-	73.6	98.2	1.47×10^2	1.96×10^2	2.45×10^2	2.95×10^2	3.44×10^2	3.93×10^2	4.42×10^2	4.91×10^2
	Pull	-	56.7	75.6	1.13×10^2	1.51×10^2	1.89×10^2	2.27×10^2	2.64×10^2	3.02×10^2	3.40×10^2	3.78×10^2
ø32	Push	-	1.21×10^2	1.61×10^2	2.41×10^2	3.22×10^2	4.02×10^2	4.83×10^2	5.63×10^2	6.43×10^2	7.24×10^2	8.04×10^2
	Pull	-	90.5	1.21×10^2	1.81×10^2	2.41×10^2	3.02×10^2	3.62×10^2	4.22×10^2	4.83×10^2	5.43×10^2	6.03×10^2
ø40	Push	-	1.88×10^2	2.51×10^2	3.77×10^2	5.03×10^2	6.28×10^2	7.54×10^2	8.80×10^2	1.01×10^3	1.13×10^3	1.26×10^3
	Pull	-	1.58×10^2	2.11×10^2	3.17×10^2	4.22×10^2	5.28×10^2	6.33×10^2	7.39×10^2	8.44×10^2	9.50×10^2	1.06×10^3
ø50	Push	-	2.95×10^2	3.93×10^2	5.89×10^2	7.85×10^2	9.82×10^2	1.18×10^3	1.37×10^3	1.57×10^3	1.77×10^3	1.96×10^3
	Pull	-	2.47×10^2	3.30×10^2	4.95×10^2	6.60×10^2	8.25×10^2	9.90×10^2	1.15×10^3	1.32×10^3	1.48×10^3	1.65×10^3
ø63	Push	3.12×10^2	4.68×10^2	6.23×10^2	9.35×10^2	1.25×10^3	1.56×10^3	1.87×10^3	2.18×10^3	2.49×10^3	2.81×10^3	3.12×10^3
	Pull	2.80×10^2	4.20×10^2	5.61×10^2	8.41×10^2	1.12×10^3	1.40×10^3	1.68×10^3	1.96×10^3	2.24×10^3	2.52×10^3	2.80×10^3
ø80	Push	5.03×10^2	7.54×10^2	1.01×10^3	1.51×10^3	2.01×10^3	2.51×10^3	3.02×10^3	3.52×10^3	4.02×10^3	4.52×10^3	5.03×10^3
	Pull	4.54×10^2	6.80×10^2	9.07×10^2	1.36×10^3	1.81×10^3	2.27×10^3	2.72×10^3	3.17×10^3	3.63×10^3	4.08×10^3	4.54×10^3
ø100	Push	7.85×10^2	1.18×10^3	1.57×10^3	2.36×10^3	3.14×10^3	3.93×10^3	4.71×10^3	5.50×10^3	6.28×10^3	7.07×10^3	7.85×10^3
	Pull	7.15×10^2	1.07×10^3	1.43×10^3	2.14×10^3	2.86×10^3	3.57×10^3	4.29×10^3	5.00×10^3	5.72×10^3	6.43×10^3	7.15×10^3

SCP*3
CMK2
CMA2
SCM
SCG
SCA2
SCS2
CKV2
CAV2/COVP/N2
SSD2
SSG
SSD
CAT
MDC2
MVC
SMG
MSD/MSDG
FC*
STK
SRL3
SRG3
SRM3
SRT3
MRL2
MRG2
SM-25
ShkAbs
FJ
FK
Spd Contr
Ending

How to order

Without switch (without magnet for switch)

SSD - G2 - 16 ◯ - 30 ——— N - LB - I

With switch (built-in magnet for switch)

SSD - G2L - 16 ◯ - 30 - T2YLH - R - N - LB - I

Ⓐ Degree of protection level
Ⓑ Bore size
Ⓒ Port thread
Ⓓ Stroke length
Ⓔ Switch model No. *7
Ⓕ Switch quantity
Ⓖ Option
Ⓗ Mounting bracket *1 *2 *3
Ⓘ Accessory *4

Code	Description
Ⓐ Degree of protection level	
G2	Coolant proof scraper + packing NBR
G3	Coolant proof scraper + packing FKM
G2L	Coolant proof scraper + packing NBR, with switch
G3L	Coolant proof scraper + packing FKM, with switch
Ⓑ Bore size (mm)	
16	ø16
20	ø20
25	ø25
32	ø32
40	ø40
50	ø50
63	ø63
80	ø80
100	ø100
Ⓒ Port thread	
Blank	Rc thread
NN	NPT thread (ø32 and over) (made-to-order product)
GN	G thread (ø32 and over) (made-to-order product)
Ⓓ Stroke length (mm)	
Refer to the stroke length table on the following page.	

Ⓔ Switch model No.

Axial lead wire	Radial lead wire	Contact	Voltage	Display	Lead wire
T2YLH*	T2YLV*	Proximity	DC	2-color display	2-wire
T3YLH*	T3YLV*				3-wire

* Lead wire length	
Blank	1 m (standard)
3	3 m (option)
5	5 m (option)
Ⓕ Switch quantity	
R	1 on rod side
H	1 on head side
D	2
Ⓖ Option	
Blank	Rod end female thread
N	Rod end male thread
Ⓗ Mounting bracket	
LB	Axial foot (ø16 to ø25 made-to-order product)
LB2	Axial foot (compact) (ø16 to ø25 made-to-order product)
CB	Clevis bracket (pin and snap ring included)
CB2	Clevis bracket (compact) (pin and snap ring included)
FA	Rod side flange (ø16 to ø25 made-to-order product)
FB	Head side flange
Ⓘ Accessory (available when rod end male thread "N" is selected)	
I	Rod eye
I2	Rod eye (compact)
Y	Rod clevis (pin and snap ring included)
Y2	Rod clevis (compact) (pin and snap ring included)

⚠ Precautions for model No. selection

*1 : The mounting bracket is included at shipment.
*2 : The structure of ø16 to ø25 does not permit retrofitting of the foot bracket (LB, LB2) or flange bracket (FA) on the rod side. Assembly before shipment is available as made to order.
*3 : The projection dimension of piston rod WF when LB2 or FA is selected is different from that of the standard. Refer to the dimensions on pages 1109 and 1110. The number of the specified protruding dimension will be added at the end of the model No. printed on the metal plate on the body.
*4 : "I" and "Y" cannot be selected together.
*5 : Refer to Ending Page 85 for custom specifications of rod end form.
*6 : Refer to pages 1086 to 1087 for combinations of variations/options.
*7 : Switches are shipped with the product. Contact CKD if assembling before shipment is necessary.

[Example of model No.]

SSD-G2L-32-30-T2YH-R-N

Model: Compact cylinder

Ⓐ Degree of protection level : Coolant proof scraper + NBR packing, with switch
Ⓑ Bore size : ø32mm
Ⓒ Port thread : Rc thread
Ⓓ Stroke length : 30mm
Ⓔ Switch model No. : Proximity switch T2YLH, lead wire 1 m
Ⓕ Switch quantity : 1 on rod side
Ⓖ Option : Rod end male thread
Ⓗ Mounting bracket : Axial foot

How to order switch

SW - T2YLH

Switch model No.
(Item Ⓔ on page 1232)

[Stroke length table]

Stroke length (mm)		Applicable bore size								
		ø16	ø20	ø25	ø32	ø40	ø50	ø63	ø80	ø100
Standard stroke length	5	●	●	●	●	●	●	●	●	●
	10	●	●	●	●	●	●	●	●	●
	15	●	●	●	●	●	●			
	20	●	●	●	●	●	●	●	●	●
	25	●	●	●	●	●	●			
	30	●	●	●	●	●	●	●	●	●
	40			●	●	●	●	●	●	●
	50			●	●	●	●	●	●	●
Min. stroke length (mm) *1		1								
Max. stroke length (mm)		30		50						
Custom stroke length *2		In 1 mm increments								

*1 : Less than 10 mm stroke length is not available.
Refer to page 1230 for the number of installed switches and the min. stroke length.
*2 : The total length is the same as that of the next longer standard stroke length.
*3 : Refer to pages 1320 and 1321 for the min. stroke length with mounting brackets LB and LB2.

How to order mounting bracket

Bore size (mm) / Mounting bracket	ø16	ø20	ø25	ø32	ø40	ø50	ø63	ø80	ø100
Foot (LB)	SSD-LB-16	SSD-LB-20	SSD-LB-25	SSD-LB-32	SSD-LB-40	SSD-LB-50	SSD-LB-63	SSD-LB-80	SSD-LB-100
Foot (LB2)	SSD-LB2-16	SSD-LB2-20	SSD-LB2-25	SSD-LB2-32	SSD-LB2-40	SSD-LB2-50	SSD-LB2-63	SSD-LB2-80	SSD-LB2-100
Flange (FA/FB)	SSD-FA-16	SSD-FA-20	SSD-FA-25	SSD-FA-32	SSD-FA-40	SSD-FA-50	SSD-FA-63	SSD-FA-80	SSD-FA-100
Clevis bracket (CB)	SSD-CB-16	SSD-CB-20	SSD-CB-25	SSD-CB-32	SSD-CB-40	SSD-CB-50	SSD-CB-63	SSD-CB-80	SSD-CB-100
Clevis bracket (CB2)	SSD-CB2-16	SSD-CB2-20	SSD-CB2-25	SSD-CB2-32	SSD-CB2-40	SSD-CB2-50	SSD-CB2-63	SSD-CB2-80	SSD-CB2-100

*1: The foot mounting bracket is provided as 2 pcs./set.
*2: The structure of ø16 to ø25 does not permit retrofitting of the foot bracket (LB, LB2) or flange bracket (FA) on the rod side. Contact CKD for details.

SCP*3
CMK2
CMA2
SCM
SCG
SCA2
SCS2
CKV2
CAV2/COVP/N2
SSD2
SSG
SSD
CAT
MDC2
MVC
SMG
MSD/MSDG
FC*
STK
SRL3
SRG3
SRM3
SRT3
MRL2
MRG2
SM-25
ShkAbs
FJ
FK
Spd Contr
Ending

Internal structure and parts list

- Degree of protection: Packing NBR SSD-G2/G2L
- Degree of protection: Packing FKM SSD-G3/G3L

● SSD-G$^{2}_{3}$L-16
(with switch)

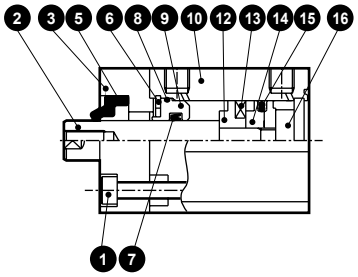

● SSD-G$^{2}_{3}$L-20, 25
(with switch)

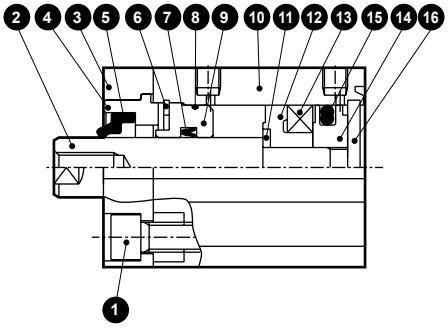

● SSD-G$^{2}_{3}$L-32 to 50
(with switch)

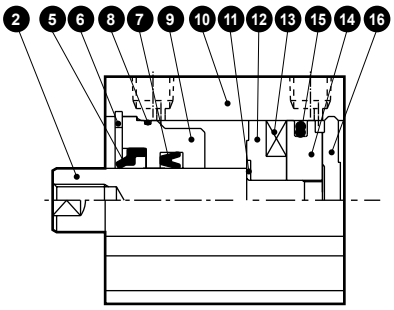

● SSD-G$^{2}_{3}$L-63 to 100
(with switch)

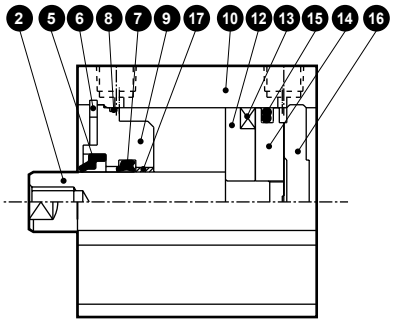

● SSD-G$^{2}_{3}$-16
(without switch)

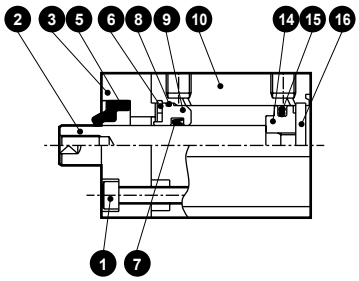

● SSD-G$^{2}_{3}$-20, 25
(without switch)

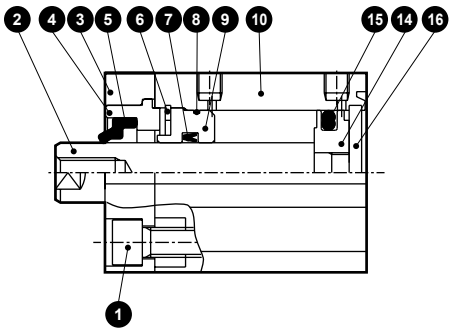

● SSD-G$^{2}_{3}$-32 to 50
(without switch)

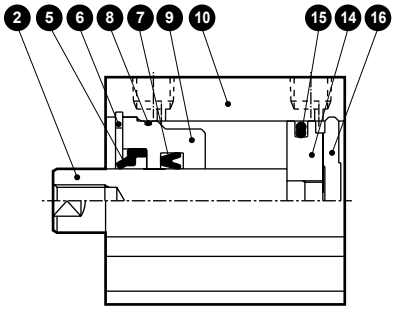

● SSD-G$^{2}_{3}$-63 to 100
(without switch)

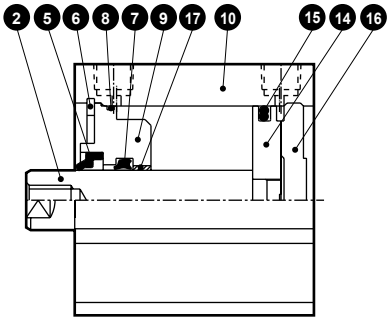

Main parts list

No.	Part name		Material	Remarks
1	Hexagon socket head cap screw		Stainless steel	ø16 to ø25
2	Piston rod		Stainless steel	Industrial chrome plating
3	Adaptor (A)		Aluminum alloy	Alumite: ø16 to ø25 only
4	Adaptor (B)		Aluminum alloy	Alumite: ø20/ø25 only
5	Scraper	G2	Nitrile rubber	
		G3	Fluoro rubber	
6	C type snap ring (for hole)		Stainless steel	
7	Rod packing	G2	Nitrile rubber	
		G3	Fluoro rubber	
8	Rod metal gasket	G2	Nitrile rubber	
		G3	Fluoro rubber	

No.	Part name		Material	Remarks
9	Rod metal		Special aluminum	Alumite
10	Body		Aluminum alloy	Hard alumite
11	Spacer washer		Stainless steel	ø16 to ø50 only
12	Spacer		ø16 to ø50: Special resin ø63 to ø100: Aluminum alloy	
13	Magnet		Plastic	
14	Piston		Aluminum alloy	Chromate
15	Piston packing	G2	Nitrile rubber	
		G3	Fluoro rubber	
16	Cover		ø16 to ø25: Stainless steel	
			ø32 to ø100: Aluminum alloy	Alumite
17	Bush		Oiles drymet	ø63 to ø100 only

Repair parts list

Part name / Bore size (mm)	Kit No.	Repair parts No.
ø16	SSD-G2- 16K	❺ ❼ ❽ ⓯
	SSD-G3- 16K	
ø20	SSD-G2- 20K	
	SSD-G3- 20K	
ø25	SSD-G2- 25K	
	SSD-G3- 25K	
ø32	SSD-G2- 32K	
	SSD-G3- 32K	
ø40	SSD-G2- 40K	
	SSD-G3- 40K	
ø50	SSD-G2- 50K	
	SSD-G3- 50K	
ø63	SSD-G2- 63K	
	SSD-G3- 63K	
ø80	SSD-G2- 80K	
	SSD-G3- 80K	
ø100	SSD-G2-100K	
	SSD-G3-100K	

Note: Specify the kit No. when placing an order.

Dimensions

CAD

- Degree of protection: Packing NBR
  SSD-G2/G2L
- Degree of protection: Packing FKM
  SSD-G3/G3L

ø16

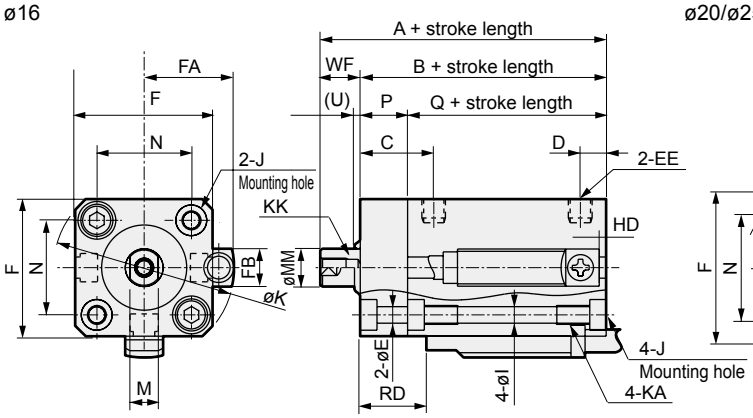

ø20/ø25

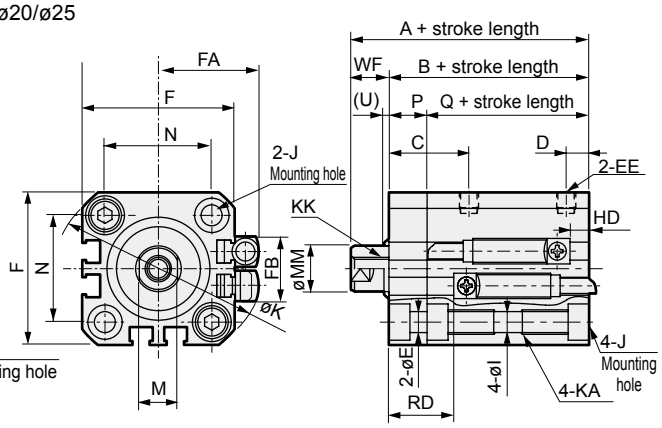

ø32 to ø100

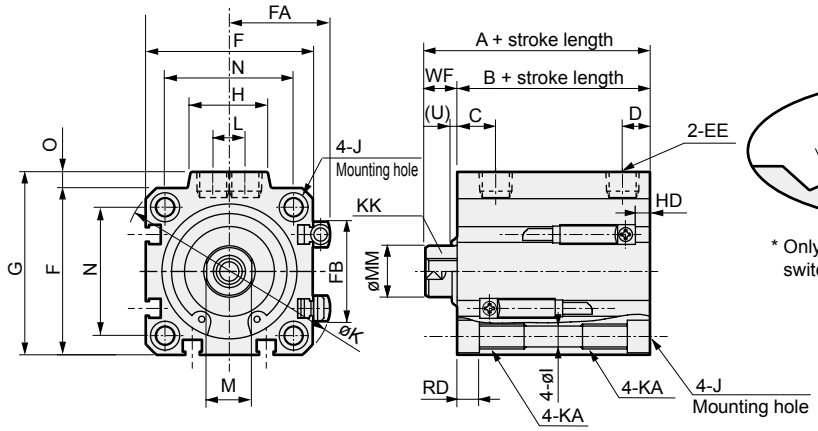

[Bore size ø100]

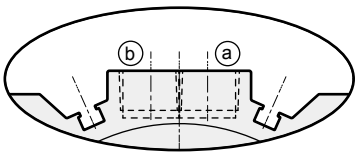

* Only for ø100, the port surface has switch grooves.

● Rod end male thread

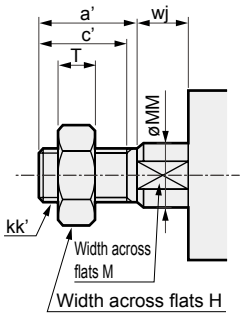

*1: To calculate A+ stroke length or B+ stroke length when using custom stroke length, apply the next longer standard stroke length (instead of the custom stroke length) to the stroke length value. (Example) If the custom stroke length is 7 mm, apply the standard stroke length of 10 mm.

Code / Bore size (mm)	Dimensions (no switch) A *1	B *1	Q *1	Common dimensions with switch A *1	B *1	Q *1	C	D	E	EE	F	FA	FB	G	H	I	J	K	KA	KK
ø16	35.5	27	17	45.5	37	27	15.5	5.5	3.4	M5	29	20.8	8	-	-	3.5	ø6.5 spot face depth 3.5	38	M4 depth 7	M4 depth 8
ø20	39	29.5	19.5	49	39.5	29.5	18	5.5	5.5	M5	36	24.3	16	-	-	5.5	ø9 spot face depth 5.5	47	M6 depth 11	M5 depth 7
ø25	42.5	32.5	22.5	52.5	42.5	32.5	21	6	5.5	M5	40	26.3	17	-	-	5.5	ø9 spot face depth 5.5	51	M6 depth 11	M6 depth 12
ø32	45	33	-	55	43	-	8	8	5.5	Rc1/8	45	28.8	24	49.5	24	5.5	ø9 spot face depth 5.5	60	M6 depth 11	M8 depth 13
ø40	51.5	39.5	-	61.5	49.5	-	12	8.5	5.5	Rc1/8	52	32.3	31	57	24	5.5	ø9 spot face depth 5.5	69	M6 depth 11	M8 depth 13
ø50	53.5	40.5	-	63.5	50.5	-	10.5	10.5	5.5	Rc1/4	64	38.3	32	71	33	6.9	ø11 spot face depth 6.5	86	M8 depth 13	M10 depth 15
ø63	59	46	-	69	56	-	13	11	5.5	Rc1/4	77	44.8	32	84	33	8.7	ø14 spot face depth 9	103	M10 depth 25	M10 depth 15
ø80	68.5	53.5	-	78.5	63.5	-	16	13	5.5	Rc3/8	98	55.3	32	104	38	10.5	ø17.5 spot face depth 11	132	M12 depth 28	M16 depth 21
ø100	80	63	-	90	73	-	23	15	5.5	Rc3/8	117	64.8	32	123.5	38	10.5	ø17.5 spot face depth 11	156	M12 depth 28	M20 depth 27

Code / Bore size (mm)	Common dimensions with switch L	M	MM	N	O	P	U	WF	Proximity T2YLH, T2YLV, T3YLH, T3YLV HD	RD	Dimensions of rod end male thread part a'	c'	H	kk'	M	MM	T	wj
ø16	-	6	8	20	-	10	3	8.5	4.5	12.5	12	10	10	M6	6	8	3.6	8.5
ø20	-	8	10	25.5	-	10	3	9.5	1.5	18.0	14	12	13	M8	8	10	5	9.5
ø25	-	10	12	28	-	10	3	10	2.0	20.0	17.5	15	17	M10×1.25	10	12	6	10
ø32	10	14	16	34	4.5	-	0	12	4.5	20.5	23.5	20.5	22	M14×1.5	14	16	8	10
ø40	10	14	16	40	5	-	2	12	8.0	23.5	23.5	20.5	22	M14×1.5	14	16	8	10
ø50	15	17	20	50	7	-	2	13	9.0	23.5	28.5	26	27	M18×1.5	17	20	11	10
ø63	15	17	20	60	7	-	2	13	13.0	24.0	28.5	26	27	M18×1.5	17	20	11	10
ø80	15	22	25	77	6	-	2	15	19.0	26.5	35.5	32.5	32	M22×1.5	22	25	13	13
ø100	15	27	30	94	6.5	-	2	17	24.5	30.5	35.5	32.5	41	M26×1.5	27	30	16	13

* For dimensions of individual accessories, refer to pages 1108 to 1115.

MEMO

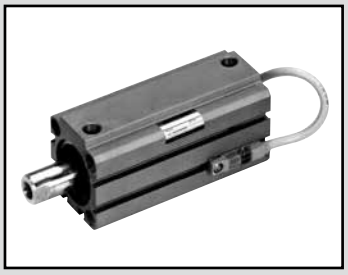

Compact cylinder double acting/high load/coolant proof

SSD-KG2/KG3 Series

● Bore size: ø16/ø20/ø25/ø32/ø40/ø50/ø63/ø80/ø100

JIS symbol

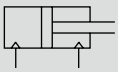

RoHS CAD

Specifications

Item	SSD-KG2/KG3 SSD-KG2L/KG3L (with switch)								
Bore size mm	ø16	ø20	ø25	ø32	ø40	ø50	ø63	ø80	ø100
Actuation	Double acting								
Working fluid	Compressed air								
Max. working pressure MPa	1.0 (≈150 psi, 10 bar)								
Min. working pressure MPa	0.15 (≈22 psi, 1.5 bar)						0.1 (≈15 psi, 1 bar)		
Proof pressure MPa	1.6 (≈230 psi, 16 bar)								
Ambient temperature °C	-10 (14°F) to 60 (140°F) (no freezing)								
Port size	M5×0.8			Rc1/8		Rc1/4		Rc3/8	
Stroke tolerance mm	$^{+2.0}_{0}$								
Working piston speed mm/s	50 to 500						50 to 300		
Cushion	Rubber cushion								
Lubrication	Not required (use turbine oil class 1 ISO VG32 if necessary for lubrication)								
Allowable absorbed energy J	0.09	0.16	0.16	0.4	0.63	0.98	1.56	2.51	3.92

Stroke length

Bore size (mm)	Standard stroke length (mm)	Max. stroke length (mm)	Min. stroke length (mm)	
			Without switch	With switch
ø16,ø20	5, 10, 15, 20, 25, 30, 40, 50	100 *2	1	10
ø25,ø32,ø40,ø50	10, 15, 20, 25, 30, 40, 50, 60, 70, 80, 90, 100	150 *2		
ø63,ø80,ø100	10, 20, 30, 40, 50, 60, 70, 80, 90, 100	200 *2		

*1 : The custom stroke length is available in 1 mm increments. (Less than 10 mm with switch is not available.) However, the total length is the same as that of the next longer standard stroke length.

*2 : Stroke length over standard to maximum is available in increments of 10. (Example) ø16: 60, 70, 80, 90, 100
Dimensions of custom stroke length (example: 64 mm stroke length) are the same as the next longer stroke length (example: 70 mm stroke length).

Number of installed switches and min. stroke length (mm)

Switch quantity	1	2	3	4	5
Switch model No. / Bore size (mm)	T*	T*	T*	T*	T*
ø16	10	10	25	-	-
ø20	10	10	35	50	65
ø25	10	10	35	50	65
ø32	10	10	35	50	65
ø40	10	10	35	50	65
ø50	10	10	35	50	65
ø63	10	10	35	50	65
ø80	10	10	35	50	65
ø100	10	10	35	50	65

Switch specifications

● Proximity switch

Type/model No.	Proximity/2-wire	Proximity/3-wire
Item	T2YLH/T2YLV	T3YLH/T3YLV
Applications	Dedicated for programmable controller	Programmable controller, relay
Power supply voltage	-	10 to 28 VDC
Load voltage/current	10 to 30 VDC, 5 to 20 mA *1	30 VDC or less, 50 mA or less
Indicator lamp	Red/green LED (Lit when ON)	
Leakage current	1 mA or less	10 μA or less
Shock resistance	980 m/S^2	
Weight g	1 m:33 3 m:87 5 m:142	

*1: The above max. load current is 20 mA at 25°C. The current is lower than 20 mA if the operating ambient temperature around the switch is higher than 25˚C. (5 to 10 mA at 60˚C)

Cylinder weight

(Unit: g)

Stroke length	5		10		15		20		25		30		40		50		60		70		80		90		100	
Bore size (mm)	No switch	Switch	No switch	Switch	No switch	Switch	No switch	Switch	No switch	Switch	No switch	Switch	No switch	Switch	No switch	Switch	No switch	Switch	No switch	Switch	No switch	Switch	No switch	Switch	No switch	Switch
ø16	69	114	79	124	90	135	101	146	112	157	123	168	145	179	167	201	189	223	211	245	233	267	255	289	277	311
ø20	88	163	101	176	114	189	126	201	139	214	151	226	176	251	201	276	226	301	251	326	276	351	301	376	326	401
ø25			134	225	150	241	166	257	181	272	198	289	230	321	262	353	294	385	326	417	358	449	390	481	422	513
ø32			232	346	253	367	275	389	297	411	319	433	362	476	405	519	448	562	491	605	534	648	577	691	620	734
ø40			316	459	343	486	369	512	395	538	422	565	475	618	528	671	581	724	634	777	687	830	740	883	793	936
ø50			509	703	551	745	594	788	637	831	678	872	762	956	846	1040	930	1124	1014	1208	1098	1292	1182	1376	1266	1460
ø63			727	1006			837	1116			948	1227	1058	1337	1168	1447	1278	1557	1388	1667	1498	1777	1608	1887	1718	1997
ø80			1274	1687			1447	1860			1621	2034	1794	2207	1967	2380	2140	2553	2313	2726	2486	2899	2659	3072	2832	3245
ø100			1887	2454			2115	2682			2342	2909	2570	3137	2798	3365	3026	3593	3254	3821	3482	4049	3710	4277	3938	4505

Stroke length	110		120		130		140		150		160		170		180		190		200	
Bore size (mm)	No switch	Switch	No switch	Switch	No switch	Switch	No switch	Switch	No switch	Switch	No switch	Switch	No switch	Switch	No switch	Switch	No switch	Switch	No switch	Switch
ø20	351	426	376	451	401	476	426	501	451	526										
ø25	454	545	486	577	518	609	550	641	582	673										
ø32	663	777	706	820	749	863	792	906	835	949										
ø40	846	989	899	1042	952	1095	1005	1148	1058	1201										
ø50	1350	1544	1434	1628	1518	1712	1602	1796	1686	1880										
ø63	1828	2107	1938	2217	2048	2327	2158	2437	2268	2547	2378	2657	2488	2767	2598	2877	2708	2987	2818	3097
ø80	3005	3418	3178	3591	3351	3764	3524	3937	3697	4110	3870	4283	4043	4456	4216	4629	4389	4802	4562	4975
ø100	4166	4733	4394	4961	4622	5189	4850	5417	5078	5645	5306	5873	5534	6101	5762	6329	5990	6557	6218	6785

Theoretical thrust table

(Unit: N)

Bore size (mm)	Operating direction	Working pressure MPa										
		0.1	0.15	0.2	0.3	0.4	0.5	0.6	0.7	0.8	0.9	1.0
ø16	Push	-	30.2	40.2	60.3	80.4	1.01×10^2	1.21×10^2	1.41×10^2	1.61×10^2	1.81×10^2	2.01×10^2
	Pull	-	22.6	30.2	45.2	60.3	75.4	90.5	1.06×10^2	1.21×10^2	1.36×10^2	1.51×10^2
ø20	Push	-	47.1	62.8	94.2	1.26×10^2	1.57×10^2	1.88×10^2	2.20×10^2	2.51×10^2	2.83×10^2	3.14×10^2
	Pull	-	35.3	47.1	70.7	94.2	1.18×10^2	1.41×10^2	1.65×10^2	1.88×10^2	2.12×10^2	2.36×10^2
ø25	Push	-	73.6	98.2	1.47×10^2	1.96×10^2	2.45×10^2	2.95×10^2	3.44×10^2	3.93×10^2	4.42×10^2	4.91×10^2
	Pull	-	56.7	75.6	1.13×10^2	1.51×10^2	1.89×10^2	2.27×10^2	2.64×10^2	3.02×10^2	3.40×10^2	3.78×10^2
ø32	Push	-	1.21×10^2	1.61×10^2	2.41×10^2	3.22×10^2	4.02×10^2	4.83×10^2	5.63×10^2	6.43×10^2	7.24×10^2	8.04×10^2
	Pull	-	90.5	1.21×10^2	1.81×10^2	2.41×10^2	3.02×10^2	3.62×10^2	4.22×10^2	4.83×10^2	5.43×10^2	6.03×10^2
ø40	Push	-	1.88×10^2	2.51×10^2	3.77×10^2	5.03×10^2	6.28×10^2	7.54×10^2	8.80×10^2	1.01×10^3	1.13×10^3	1.26×10^3
	Pull	-	1.58×10^2	2.11×10^2	3.17×10^2	4.22×10^2	5.28×10^2	6.33×10^2	7.39×10^2	8.44×10^2	9.50×10^2	1.06×10^3
ø50	Push	-	2.95×10^2	3.93×10^2	5.89×10^2	7.85×10^2	9.82×10^2	1.18×10^3	1.37×10^3	1.57×10^3	1.77×10^3	1.96×10^3
	Pull	-	2.47×10^2	3.30×10^2	4.95×10^2	6.60×10^2	8.25×10^2	9.90×10^2	1.15×10^3	1.32×10^3	1.48×10^3	1.65×10^3
ø63	Push	3.12×10^2	4.68×10^2	6.23×10^2	9.35×10^2	1.25×10^3	1.56×10^3	1.87×10^3	2.18×10^3	2.49×10^3	2.81×10^3	3.12×10^3
	Pull	2.80×10^2	4.20×10^2	5.61×10^2	8.41×10^2	1.12×10^3	1.40×10^3	1.68×10^3	1.96×10^3	2.24×10^3	2.52×10^3	2.80×10^3
ø80	Push	5.03×10^2	7.54×10^2	1.01×10^3	1.51×10^3	2.01×10^3	2.51×10^3	3.02×10^3	3.52×10^3	4.02×10^3	4.52×10^3	5.03×10^3
	Pull	4.54×10^2	6.80×10^2	9.07×10^2	1.36×10^3	1.81×10^3	2.27×10^3	2.72×10^3	3.17×10^3	3.63×10^3	4.08×10^3	4.54×10^3
ø100	Push	7.85×10^2	1.18×10^3	1.57×10^3	2.36×10^3	3.14×10^3	3.93×10^3	4.71×10^3	5.50×10^3	6.28×10^3	7.07×10^3	7.85×10^3
	Pull	7.15×10^2	1.07×10^3	1.43×10^3	2.14×10^3	2.86×10^3	3.57×10^3	4.29×10^3	5.00×10^3	5.72×10^3	6.43×10^3	7.15×10^3

How to order

Without switch (without magnet for switch)

SSD - KG2 - 16 - 30 ——— N - LB - I

With switch (built-in magnet for switch)

SSD - KG2L - 16 - 30 - T2YLH - R - N - LB - I

Ⓐ Degree of protection level

Ⓑ Bore size

Ⓒ Stroke length

Ⓓ Switch model No. *7

Ⓔ Switch quantity

Ⓕ Option

Ⓖ Mounting bracket *1 *2 *3

Ⓗ Accessory *4

Code	Description
Ⓐ Degree of protection level	
KG2	High load + coolant proof scraper + packing NBR
KG3	High load + coolant proof scraper + packing FKM
KG2L	High load + coolant proof scraper + packing NBR, with switch
KG3L	High load + coolant proof scraper + packing FKM, with switch

Ⓑ Bore size (mm)	
16	ø16
20	ø20
25	ø25
32	ø32
40	ø40
50	ø50
63	ø63
80	ø80
100	ø100

Ⓒ Stroke length (mm)

Refer to the stroke length table on the following page.

Ⓓ Switch model No.

Axial lead wire	Radial lead wire	Contact	Voltage	Display	Lead wire
T2YLH*	**T2YLV***	Proximity	DC	2-color display	2-wire
T3YLH*	**T3YLV***				3-wire

*** Lead wire length**	
Blank	1 m (standard)
3	3 m (option)
5	5 m (option)

Ⓔ Switch quantity	
R	1 on rod side
H	1 on head side
D	2

Ⓕ Option	
Blank	Rod end female thread
N	Rod end male thread

Ⓖ Mounting bracket	
LB	Axial foot (ø16 to ø25 made-to-order product)
LB2	Axial foot (compact) (ø16 to ø25 made-to-order product)
CB	Clevis bracket (pin and snap ring included)
CB2	Clevis bracket (compact) (pin and snap ring included)
FA	Rod side flange (ø16 to ø25 made-to-order product)
FB	Head side flange

Ⓗ Accessory (available when rod end male thread "N" is selected)	
I	Rod eye
I2	Rod eye (compact)
Y	Rod clevis (pin and snap ring included)
Y2	Rod clevis (compact) (pin and snap ring included)

⚠ Precautions for model No. selection

*1 : The mounting bracket is included at shipment.
*2 : The structure of ø16 to ø25 does not permit retrofitting of the foot bracket (LB, LB2) or flange bracket (FA) on the rod side. Assembly before shipment is available as made to order.
*3 : The projection dimension of piston rod WF when LB2 or FA is selected is different from that of the standard. Refer to the dimensions on pages 1109 and 1110. The number of the specified protruding dimension will be added at the end of the model No. printed on the metal plate on the body.
*4 : "I" and "Y" cannot be selected together.
*5 : Refer to Ending Page 85 for custom specifications of rod end form.
*6 : Refer to pages 1088 and 1089 for combinations of variations/options.
*7 : Switches are shipped with the product. Contact CKD if assembling before shipment is necessary.

[Example of model No.]

SSD-KG2L-32-30-T2YLH-R-N

Model: Compact cylinder, high load

Ⓐ Degree of protection level : Coolant proof scraper + NBR packing, with switch
Ⓑ Bore size : ø32 mm
Ⓒ Stroke length : 30 mm
Ⓓ Switch model No. : Proximity switch T2YLH, lead wire 1 m
Ⓔ Switch quantity : 1 on rod side
Ⓕ Option : Rod end male thread
Ⓖ Mounting bracket : Axial foot

How to order switch

SW - T2YLH

Switch model No.
(Item Ⓓ on page 1240)

[Stroke length table]

Stroke length (mm)		Applicable bore size								
		ø16	ø20	ø25	ø32	ø40	ø50	ø63	ø80	ø100
Standard stroke length	5	●	●							
	10	●	●	●	●	●	●	●	●	●
	15	●	●	●	●	●	●			
	20	●	●	●	●	●	●	●	●	●
	25	●	●	●	●	●	●			
	30	●	●	●	●	●	●	●	●	●
	40	●	●	●	●	●	●	●	●	●
	50	●	●	●	●	●	●	●	●	●
	60			●	●	●	●	●	●	●
	70			●	●	●	●	●	●	●
	80			●	●	●	●	●	●	●
	90			●	●	●	●	●	●	●
	100			●	●	●	●	●	●	●
Min. stroke length (mm) *1		1								
Max. stroke length (mm)		100		150				200		
Custom stroke length *2		In 1 mm increments								

*1 : Less than 10 mm stroke length is not available.
Refer to page 1238 for the number of installed switches and the min. stroke length.
*2 : The total length is the same as that of the next longer standard stroke length.

How to order mounting bracket

Bore size (mm) / Mounting bracket	ø16	ø20	ø25	ø32	ø40	ø50	ø63	ø80	ø100
Foot (LB)	SSD-LB-16	SSD-LB-20	SSD-LB-25	SSD-LB-32	SSD-LB-40	SSD-LB-50	SSD-LB-63	SSD-LB-80	SSD-LB-100
Foot (LB2)	SSD-LB2-16	SSD-LB2-20	SSD-LB2-25	SSD-LB2-32	SSD-LB2-40	SSD-LB2-50	SSD-LB2-63	SSD-LB2-80	SSD-LB2-100
Flange (FA/FB)	SSD-FA-16	SSD-FA-20	SSD-FA-25	SSD-FA-32	SSD-FA-40	SSD-FA-50	SSD-FA-63	SSD-FA-80	SSD-FA-100
Clevis bracket (CB)	SSD-CB-16	SSD-CB-20	SSD-CB-25	SSD-CB-32	SSD-CB-40	SSD-CB-50	SSD-CB-63	SSD-CB-80	SSD-CB-100
Clevis bracket (CB2)	SSD-CB2-16	SSD-CB2-20	SSD-CB2-25	SSD-CB2-32	SSD-CB2-40	SSD-CB2-50	SSD-CB2-63	SSD-CB2-80	SSD-CB2-100

*1: The foot mounting bracket is provided as 2 pcs./set.
*2: The structure of ø16 to ø25 does not permit retrofitting of the foot bracket (LB, LB2) or flange bracket (FA) on the rod side. Contact CKD for details.

Internal structure and parts list

- Degree of protection: Packing NBR SSD-KG2/KG2L
- Degree of protection: Packing FKM SSD-KG3/KG3L

● SSD-KG$^{2}_{3}$L-16
(with switch)

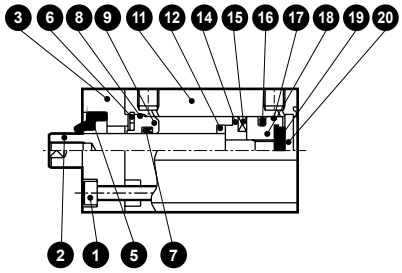

● SSD-KG$^{2}_{3}$L-20, 25
(with switch)

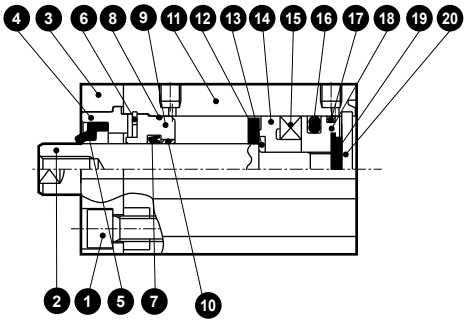

● SSD-KG$^{2}_{3}$L-32 to 50
(with switch)

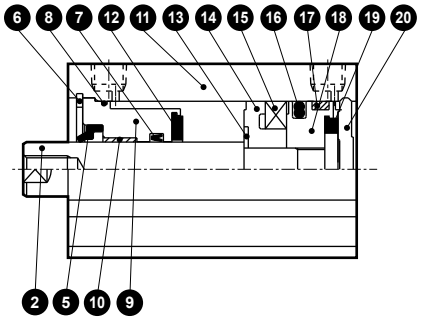

● SSD-KG$^{2}_{3}$L63 to 100
(with switch)

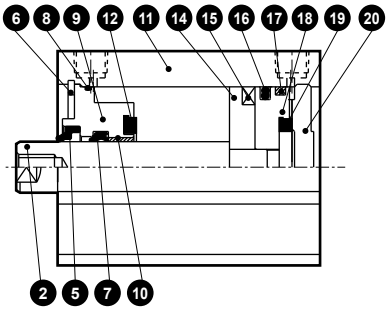

● SSD-KG$^{2}_{3}$-16
(without switch)

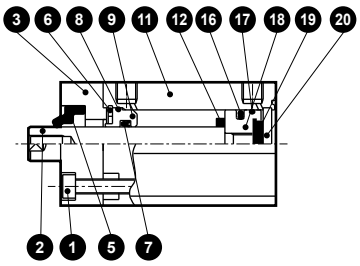

● SSD-KG$^{2}_{3}$-20, 25
(without switch)

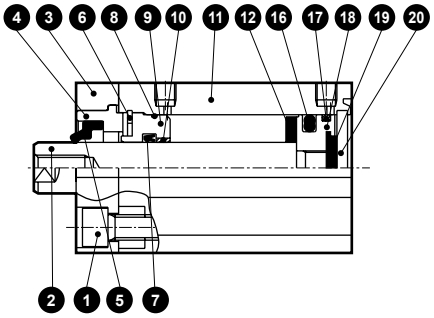

● SSD-KG$^{2}_{3}$-32 to 50
(without switch)

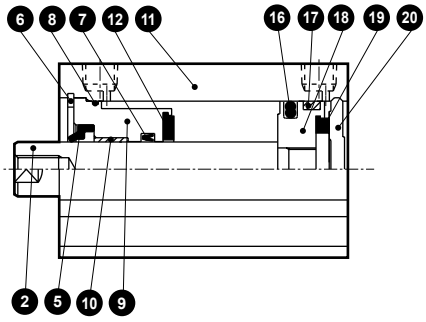

● SSD-KG$^{2}_{3}$-63 to 100
(without switch)

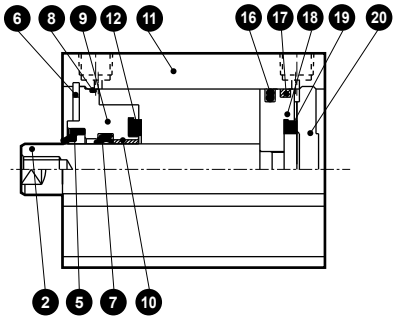

Main parts list

No.	Part name		Material	Remarks
1	Hexagon socket head cap screw		Stainless steel	ø16 to ø25 only
2	Piston rod		Stainless steel	Industrial chrome plating
3	Adaptor (A)		Aluminum alloy	Alumite: ø16 to ø25 only
4	Adaptor (B)		Aluminum alloy	Alumite: ø20/ø25 only
5	Scraper	G2	Nitrile rubber	
		G3	Fluoro rubber	
6	C type snap ring (for hole)		Stainless steel	
7	Rod packing	G2	Nitrile rubber	
		G3	Fluoro rubber	
8	Rod metal gasket	G2	Nitrile rubber	
		G3	Fluoro rubber	
9	Rod metal		Special aluminum	Alumite
10	Bush		Oiles drymet	ø20 to ø100 only

No.	Part name		Material	Remarks
11	Body		Aluminum alloy	Hard alumite
12	Cushion rubber R		Urethane rubber	
13	Spacer washer		Stainless steel	ø16 to ø25 only
14	Spacer		ø16 to ø50: Special resin ø63 to ø100: Aluminum alloy	
15	Magnet		Plastic	
16	Piston packing	G2	Nitrile rubber	
		G3	Fluoro rubber	
17	Wear ring		Polyacetal resin	
18	Piston		Aluminum alloy	Chromate
19	Cushion rubber H		Urethane rubber	
20	Cover		ø16 to ø25: Stainless steel	
			ø32 to ø100: Aluminum alloy	Alumite

Repair parts list

Part name / Bore size (mm)	Kit No.	Repair parts No.
ø16	SSD-KG2-16K	❺ ❼ ❽ ⓬ ⓰ ⓱ ⓳
	SSD-KG3-16K	
ø20	SSD-KG2-20K	
	SSD-KG3-20K	
ø25	SSD-KG2-25K	
	SSD-KG3-25K	
ø32	SSD-KG2-32K	
	SSD-KG3-32K	
ø40	SSD-KG2-40K	
	SSD-KG3-40K	
ø50	SSD-KG2-50K	
	SSD-KG3-50K	
ø63	SSD-KG2-63K	
	SSD-KG3-63K	
ø80	SSD-KG2-80K	
	SSD-KG3-80K	
ø100	SSD-KG2-100K	
	SSD-KG3-100K	

Note: Specify the kit No. when placing an order.

SCP*3
CMK2
CMA2
SCM
SCG
SCA2
SCS2
CKV2
CAV2/COVP/N2
SSD2
SSG
SSD
CAT
MDC2
MVC
SMG
MSD/MSDG
FC*
STK
SRL3
SRG3
SRM3
SRT3
MRL2
MRG2
SM-25
ShkAbs
FJ
FK
Spd Contr
Ending

Dimensions

SSD-KG2/KG3

ø16

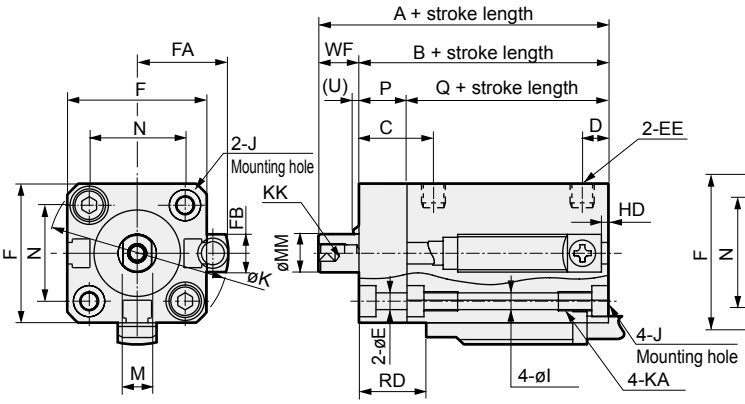

ø20/ø25

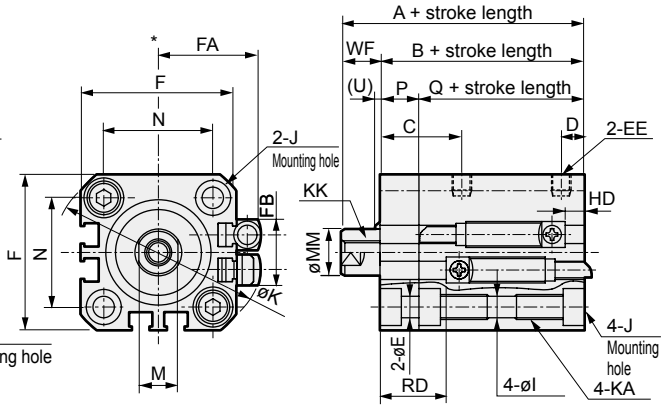

ø32 to ø100

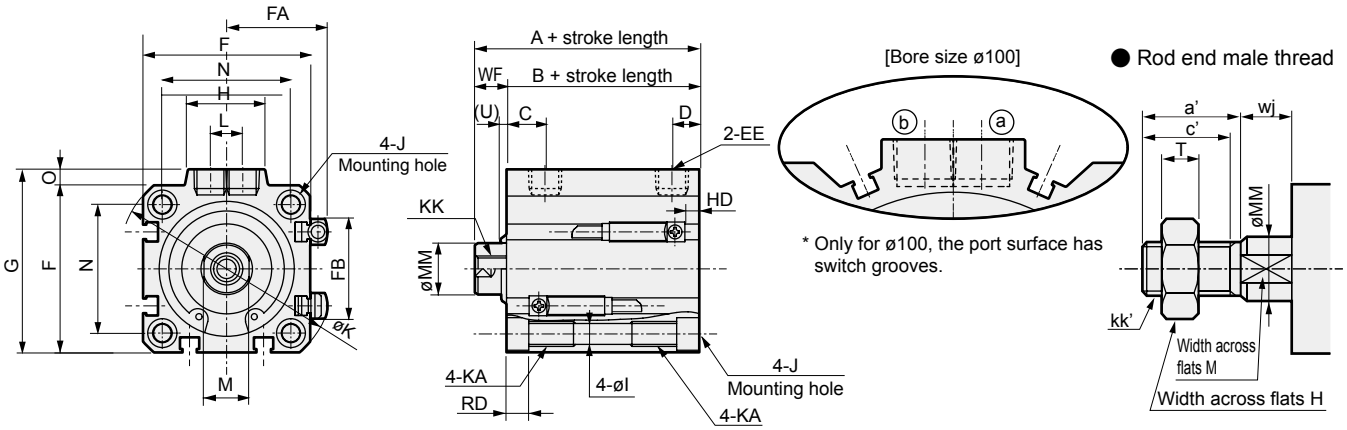

*1: To calculate A+ stroke length or B+ stroke length when using custom stroke length, apply the next longer standard stroke length (instead of the custom stroke length) to the stroke length value. (Example) If the custom stroke length is 7 mm, apply the standard stroke length of 10 mm.

Code / Bore size (mm)	Dimensions (no switch) A *1	B *1	Q *1	Common dimensions with switch A *1	B *1	Q *1	C	D	E	EE	F	FA	FB	G	H	I	J	K	KA	KK
ø16	40.5	32	22	45.5	37	27	15.5	5.5	3.4	M5	29	20.8	8	-	-	3.5	ø6.5 spot face depth 3.5	38	M4 depth 7	M4 depth 8
ø20	44	34.5	24.5	54	44.5	34.5	18	5.5	5.5	M5	36	24.3	16	-	-	5.5	ø9 spot face depth 5.5	47	M6 depth 11	M5 depth 7
ø25	47.5	37.5	27.5	57.5	47.5	37.5	21	6	5.5	M5	40	26.3	17	-	-	5.5	ø9 spot face depth 5.5	51	M6 depth 11	M6 depth 12
ø32	55	43	-	65	53	-	8	8	5.5	Rc1/8	45	28.8	24	49.5	24	5.5	ø9 spot face depth 5.5	60	M6 depth 11	M8 depth 13
ø40	61.5	49.5	-	71.5	59.5	-	12	8.5	5.5	Rc1/8	52	32.3	31	57	24	5.5	ø9 spot face depth 5.5	69	M6 depth 11	M8 depth 13
ø50	63.5	50.5	-	73.5	60.5	-	10.5	10.5	5.5	Rc1/4	64	38.3	32	71	33	6.9	ø11 spot face depth 6.5	86	M8 depth 13	M10 depth 15
ø63	69	56	-	79	66	-	13	11	5.5	Rc1/4	77	44.8	32	84	33	8.7	ø14 spot face depth 9	103	M10 depth 25	M10 depth 15
ø80	78.5	63.5	-	88.5	73.5	-	16	13	5.5	Rc3/8	98	55.3	32	104	38	10.5	ø17.5 spot face depth 11	132	M12 depth 28	M16 depth 21
ø100	90	73	-	100	83	-	23	15	5.5	Rc3/8	117	64.8	32	123.5	38	10.5	ø17.5 spot face depth 11	156	M12 depth 28	M20 depth 27

Code / Bore size (mm)	Common dimensions with switch L	M	MM	N	O	P	U	WF	Proximity T2YLH, T2YLV, T3YLH, T3YLV HD	RD	Dimensions of rod end male thread part a'	c'	H	kk'	M	MM	T	wj
ø16	-	6	8	20	-	10	3	8.5	2.5	14.5	12	10	10	M6	6	8	3.6	8.5
ø20	-	8	10	25.5	-	10	3	9.5	4.5	20.0	14	12	13	M8	8	10	5	9.5
ø25	-	10	12	28	-	10	3	10	4.5	22.5	17.5	15	17	M10×1.25	10	12	6	10
ø32	10	14	16	34	4.5	-	0	12	9.5	25.5	23.5	20.5	22	M14×1.5	14	16	8	10
ø40	10	14	16	40	5	-	2	12	10.5	31.0	23.5	20.5	22	M14×1.5	14	16	8	10
ø50	15	17	20	50	7	-	2	13	11.5	31.0	28.5	26	27	M18×1.5	17	20	11	10
ø63	15	17	20	60	7	-	2	13	18.0	29.0	28.5	26	27	M18×1.5	17	20	11	10
ø80	15	22	25	77	6	-	2	15	24.0	31.5	35.5	32.5	32	M22×1.5	22	25	13	13
ø100	15	27	30	94	6.5	-	2	17	29.5	35.5	35.5	32.5	41	M26×1.5	27	30	16	13

* For dimensions of individual accessories, refer to pages 1108 to 1115.

MEMO

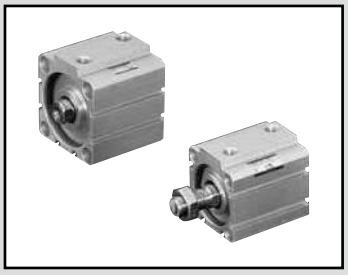

Compact cylinder
Double acting/single rod/coil scraper

SSD-G1 Series

Compact cylinder
Double acting/single rod/anti-spatter adherence

SSD-G4 Series

● Bore size: ø25/ø32/ø40/ø50/ø63/ø80/ø100

JIS symbol

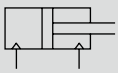

RoHS CAD

Specifications

Item	SSD-G1/G4 SSD-G1L/G4L (with switch)						
Bore size mm	ø25	ø32	ø40	ø50	ø63	ø80	ø100
Actuation	Double acting						
Working fluid	Compressed air						
Max. working pressure MPa	1.0 (≈150 psi, 10 bar)						
Min. working pressure MPa	0.15 (≈22 psi, 1.5 bar)				0.1 (≈15 psi, 1 bar)		
Proof pressure MPa	1.6 (≈230 psi, 16 bar)						
Ambient temperature °C	-10 (14°F) to 60 (140°F) (no freezing)						
Port size	M5	Rc1/8		Rc1/4		Rc3/8	
Stroke tolerance mm	+1.0 0						
Working piston speed mm/s	50 to 500				50 to 300		
Cushion	None						
Lubrication	Not required (use turbine oil class 1 ISO VG32 if necessary for lubrication)						
Allowable absorbed energy J	0.021	0.025	0.092	0.1	0.12	0.27	0.56

Stroke length

Bore size (mm)	Standard stroke length (mm)	Max. stroke length (mm)	Min. stroke (mm)/strong magnetic field proof switch
ø25	5, 10, 15, 20, 25, 30, 40, 50	*2) 50	1 (10) The value in ( ) is for types with one or two switches.
ø32			
ø40			
ø50			
ø63	5, 10, 20, 30, 40, 50	*2) 50	
ø80			
ø100			

*1) The custom stroke length is available in 1 mm increments.
*2) If the standard stroke is exceeded, the high load is used. Refer to page 1116 for specifications.
*3) Refer to pages 1320 and 1321 for the min. stroke length with mounting brackets LB and LB2.

Switch specifications

Item	Proximity 2-wire
	T2YD
Applications	Dedicated for programmable controller
Lamp	Red/green LED (Lit when ON)
Load voltage	24 VDC ±10%
Load current	5 to 20 mA
Internal voltage drop	6V or less
Leakage current	1.0 mA or less
Output delay time *1 (ON delay, OFF delay)	60 ms or less
Lead wire length	1 m (oil resistant vinyl cabtyre cable ø 6, 0.5 mm^2 x 2-conductor) *2, *3
Insulation resistance	100 MΩ or more at 500 VDC megger
Withstand voltage	No failure after 1 minute of 1,000 VAC application.
Shock resistance	980 m/s^2
Ambient temperature	-10 to +60°C
Degree of protection	JIS C0920 (water-tight), IEC standards IP67, oil resistance
Weight g	1 m:61 3 m:166 5 m:272

*1 : Indicates the time from magnetic sensor detection of the piston magnet until switch output.
*2 : 3 m and 5 m lead wires are available as options.
*3 : Flame-resistant lead wires are available as options.
*4 : Switch for AC magnetic field (T2YD) cannot be used in DC magnetic field.

Cylinder weight table (the weight of the switches is when there are 2 cylinder switches.)

(Unit: g)

Stroke length (mm)	5		10		15		20		25		30		40		50	
Bore size (mm)	No switch	Switch	No switch	Switch	No switch	Switch	No switch	Switch	No switch	Switch	No switch	Switch	No switch	Switch	No switch	Switch
ø25	131	222	146	237	162	253	178	269	194	285	209	300	241	332	272	363
ø32	184	298	206	320	228	342	250	364	271	385	293	407	337	451	380	494
ø40	265	408	292	435	318	461	345	488	372	515	398	541	451	594	504	647
ø50	418	612	460	654	502	696	544	738	586	780	629	823	713	907	797	991
ø63	603	882	658	937	-	-	768	1047	-	-	878	1157	989	1268	1099	1378
ø80	1093	1506	1180	1593	-	-	1353	1766	-	-	1526	1939	1700	2113	1873	2286
ø100	1654	2221	1768	2335	-	-	1995	2562	-	-	2223	2790	2450	3017	2678	3245

Theoretical thrust table

(Unit: N)

Bore size (mm)	Operating direction	Working pressure MPa										
		0.1	0.15	0.2	0.3	0.4	0.5	0.6	0.7	0.8	0.9	1.0
ø25	Push	-	73.6	98.2	1.47×10^2	1.96×10^2	2.45×10^2	2.95×10^2	3.44×10^2	3.93×10^2	4.42×10^2	4.91×10^2
	Pull	-	56.7	75.6	1.13×10^2	1.51×10^2	1.89×10^2	2.27×10^2	2.64×10^2	3.02×10^2	3.40×10^2	3.78×10^2
ø32	Push	-	1.21×10^2	1.61×10^2	2.41×10^2	3.22×10^2	4.02×10^2	4.83×10^2	5.63×10^2	6.43×10^2	7.24×10^2	8.04×10^2
	Pull	-	90.5	1.21×10^2	1.81×10^2	2.41×10^2	3.02×10^2	3.62×10^2	4.22×10^2	4.83×10^2	5.43×10^2	6.03×10^2
ø40	Push	-	1.88×10^2	2.51×10^2	3.77×10^2	5.03×10^2	6.28×10^2	7.54×10^2	8.80×10^2	1.01×10^3	1.13×10^3	1.26×10^3
	Pull	-	1.58×10^2	2.11×10^2	3.17×10^2	4.22×10^2	5.28×10^2	6.33×10^2	7.39×10^2	8.44×10^2	9.50×10^2	1.06×10^3
ø50	Push	-	2.95×10^2	3.93×10^2	5.89×10^2	7.85×10^2	9.82×10^2	1.18×10^3	1.37×10^3	1.57×10^3	1.77×10^3	1.96×10^3
	Pull	-	2.47×10^2	3.30×10^2	4.95×10^2	6.60×10^2	8.25×10^2	9.90×10^2	1.15×10^3	1.32×10^3	1.48×10^3	1.65×10^3
ø63	Push	3.12×10^2	4.68×10^2	6.23×10^2	9.35×10^2	1.25×10^3	1.56×10^3	1.87×10^3	2.18×10^3	2.49×10^3	2.81×10^3	3.12×10^3
	Pull	2.80×10^2	4.20×10^2	5.61×10^2	8.41×10^2	1.12×10^3	1.40×10^3	1.68×10^3	1.96×10^3	2.24×10^3	2.52×10^3	2.80×10^3
ø80	Push	5.03×10^2	7.54×10^2	1.01×10^3	1.51×10^3	2.01×10^3	2.51×10^3	3.02×10^3	3.52×10^3	4.02×10^3	4.52×10^3	5.03×10^3
	Pull	4.54×10^2	6.80×10^2	9.07×10^2	1.36×10^3	1.81×10^3	2.27×10^3	2.72×10^3	3.17×10^3	3.63×10^3	4.08×10^3	4.54×10^3
ø100	Push	7.85×10^2	1.18×10^3	1.57×10^3	2.36×10^3	3.14×10^3	3.93×10^3	4.71×10^3	5.50×10^3	6.28×10^3	7.07×10^3	7.85×10^3
	Pull	7.15×10^2	1.07×10^3	1.43×10^3	2.14×10^3	2.86×10^3	3.57×10^3	4.29×10^3	5.00×10^3	5.72×10^3	6.43×10^3	7.15×10^3

SCP*3
CMK2
CMA2
SCM
SCG
SCA2
SCS2
CKV2
CAV2/COVP/N2
SSD2
SSG
SSD
CAT
MDC2
MVC
SMG
MSD/MSDG
FC*
STK
SRL3
SRG3
SRM3
SRT3
MRL2
MRG2
SM-25
ShkAbs
FJ
FK
Spd Contr
Ending

How to order

Without switch (without magnet for switch)

SSD-G4 - 32 - 10 ——— N - LB - I

With switch (built-in magnet for switch)

SSD-G4L - 32 - 10 - T2YD - R - N - LB - I

Ⓐ Model No.
Ⓑ Bore size
Ⓒ Stroke length *1
Ⓓ Switch model No. *4
Ⓔ Switch quantity
Ⓕ Option
Ⓖ Mounting bracket *1 *2
Ⓗ Accessory *3

Code	Description
Ⓐ Model No.	
SSD-G1	Double acting/single rod/coil scraper
SSD-G1L	Double acting/single rod/coil scraper/with switch
SSD-G4	Double acting/single rod/anti-spatter adherence
SSD-G4L	Double acting/single rod/anti-spatter adherence/with switch
Ⓑ Bore size (mm)	
25	ø25
32	ø32
40	ø40
50	ø50
63	ø63
80	ø80
100	ø100
Ⓒ Stroke length (mm)	
Refer to the stroke length table on the following page.	

Ⓓ Switch model No.

Axial lead wire	Radial lead wire	Contact	Voltage	Display	Lead wire
T2YD*	—	Proximity	DC	2-color display AC magnetic field	2-wire
T2YDT*	—				

* Lead wire length	
Blank	1 m (standard)
3	3 m (option)
5	5 m (option)

Ⓔ Switch quantity	
R	1 on rod side
H	1 on head side
D	2
Ⓕ Option	
Blank	Rod end female thread
N	Rod end male thread
Ⓖ Mounting bracket	
LB	Axial foot
LB2	Axial foot (compact)
CB	Clevis bracket (pin and snap ring included)
CB2	Clevis bracket (compact) (pin and snap ring included)
FA	Rod side flange
FB	Head side flange
Ⓗ Accessory (available when rod end male thread "N" is selected)	
I	Rod eye
I2	Rod eye (compact)
Y	Rod clevis (pin and snap ring included)
Y2	Rod clevis (compact) (pin and snap ring included)

⚠ Precautions for model No. selection

*1 : The mounting bracket is included at shipment.
*2 : The projection dimension of piston rod WF when LB2 or FA is selected is different from that of the standard. Refer to the dimensions on pages 1109 and 1110. The number of the specified protruding dimension will be added at the end of the model No. printed on the metal plate on the body.
*3 : "I" and "Y" cannot be selected together.
*4 : Switches are shipped with the product. Contact CKD if assembling before shipment is necessary.

[Example of model No.]

SSD-G4L-32-10-T2YD-R-N

Model: Compact cylinder double acting/anti-spatter adherence

Ⓑ Bore size : ø32 mm
Ⓒ Stroke length :10 mm
Ⓓ Switch model No. : Proximity switch for AC magnetic field T2YD
· Lead wire length 1 m
Ⓔ Switch quantity : 1 on rod side
Ⓕ Option : Rod end male thread

How to order switch

SW - **T2YD***

Switch model No.
(Item Ⓓ on page 1248)

[Stroke length table]

Stroke length (mm)		Applicable bore size						
		ø25	ø32	ø40	ø50	ø63	ø80	ø100
Standard stroke length *1	5	●	●	●	●	●	●	●
	10	●	●	●	●	●	●	●
	15	●	●	●	●			
	20	●	●	●	●	●	●	●
	25	●	●	●	●			
	30	●	●	●	●	●	●	●
	40	●	●	●	●	●	●	●
	50	●	●	●	●	●	●	●
Min. stroke length (mm) *2		1						
Max. stroke length (mm)		50						
Custom stroke length *3		In 1 mm increments						

*1 : If the standard stroke is exceeded, the high load (K) is used. Refer to page 1116 for specifications, and pages 1122 to 1125 for dimensions.
*2 : Less than 10 mm stroke length with AC magnetic field proof switch is not available.
*3 : The total length is the same as that of the next longer standard stroke length.
*4 : Refer to pages 1320 and 1321 for the min. stroke length with mounting brackets LB and LB2.

How to order mounting bracket

Bore size (mm) / Mounting bracket	ø25	ø32	ø40	ø50	ø63	ø80	ø100
Foot (LB)	SSD-LB-25	SSD-LB-32	SSD-LB-40	SSD-LB-50	SSD-LB-63	SSD-LB-80	SSD-LB-100
Foot (LB2)	SSD-LB2-25	SSD-LB2-32	SSD-LB2-40	SSD-LB2-50	SSD-LB2-63	SSD-LB2-80	SSD-LB2-100
Flange (FA/FB)	SSD-FA-25	SSD-FA-32	SSD-FA-40	SSD-FA-50	SSD-FA-63	SSD-FA-80	SSD-FA-100
Clevis bracket (CB)	SSD-CB-25	SSD-CB-32	SSD-CB-40	SSD-CB-50	SSD-CB-63	SSD-CB-80	SSD-CB-100
Clevis bracket (CB2)	SSD-CB2-25	SSD-CB2-32	SSD-CB2-40	SSD-CB2-50	SSD-CB2-63	SSD-CB2-80	SSD-CB2-100

*1: The foot mounting bracket is provided as 2 pcs./set.

Internal structure and parts list

● SSD-G1L/G4L-25 (double acting/anti-spatter adherence/ with switch)

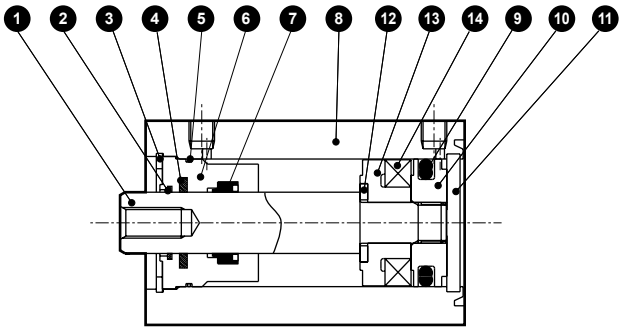

● SSD-G1L/G4L-32 to 50 (double acting/anti-spatter adherence/ with switch)

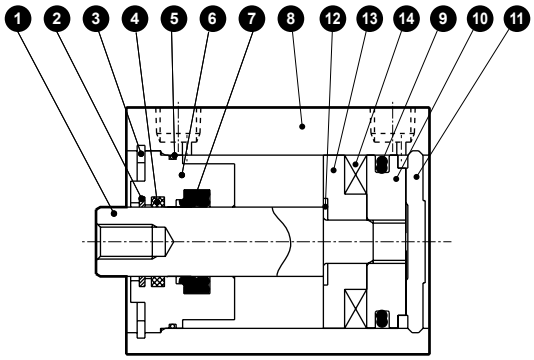

● SSD-G1/G4-25 (double acting/anti-spatter adherence)

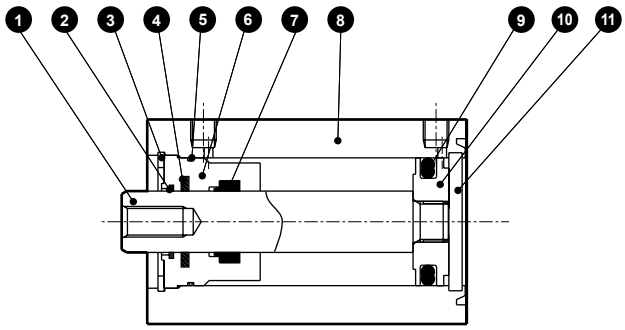

● SSD-G1/G4-32 to 50 (double acting/anti-spatter adherence)

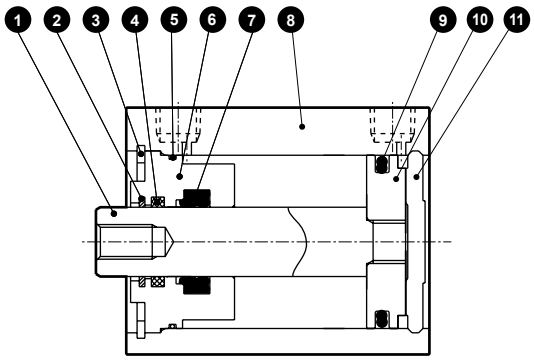

No.	Part name	Material	Remarks	No.	Part name	Material	Remarks
1	Piston rod	ø25: Stainless steel, ø32 to ø50: Steel	Industrial chrome plating	8	Tube body	Aluminum alloy	Hard alumite
				9	Piston packing	Nitrile rubber	
2	Coil scraper	Phosphor bronze		10	Piston	Aluminum alloy	Chromate
3	C type snap ring for hole	Steel	Zinc phosphate	11	Cover	ø25: Stainless steel ø32 to ø50: Aluminum alloy	Alumite (ø32 to 50)
4	Lube keeping structure	Special rubber	G4 only				
5	Rod metal gasket	Nitrile rubber		12	Spacer washer	Stainless steel	
6	Rod metal	Special aluminum	Alumite	13	Spacer	Special resin	
7	Rod packing	Nitrile rubber		14	Magnet	Plastic	

Repair parts list

Part name / Bore size (mm)	Kit No.	Repair parts No.
ø25	SSD-G1-25K	❷ ❺ ❼ ❾
ø32	SSD-G1-32K	
ø40	SSD-G1-40K	
ø50	SSD-G1-50K	

Internal structure and parts list

● SSD-G1L/G4L-63 to 100 (double acting/anti-spatter adherence/with switch)

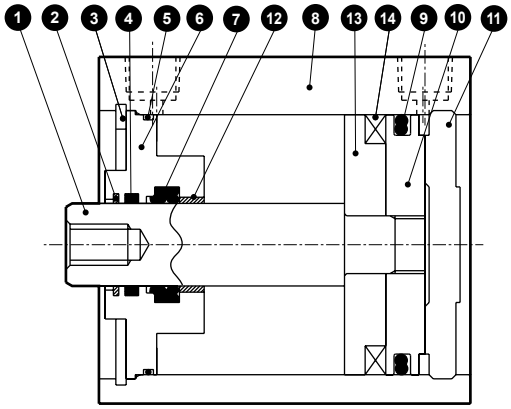

● SSD-G1/G4-63 to 100 (double acting/anti-spatter adherence)

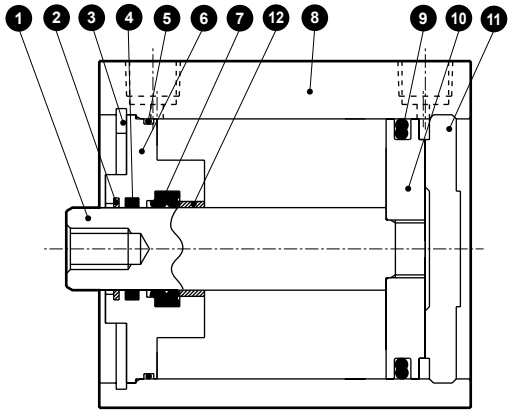

No.	Part name	Material	Remarks	No.	Part name	Material	Remarks
1	Piston rod	Steel	Industrial chrome plating	8	Tube body	Aluminum alloy	Hard alumite
2	Coil scraper	Phosphor bronze		9	Piston packing	Nitrile rubber	
3	C type snap ring for hole	Steel	Zinc phosphate	10	Piston	Aluminum alloy	Chromate
4	Lube keeping structure	Special rubber	G4 only	11	Cover	Aluminum alloy	Alumite
5	Rod metal gasket	Nitrile rubber		12	Bush	Oiles drymet	
6	Rod metal	Aluminum alloy		13	Spacer	Aluminum alloy	Chromate
7	Rod packing	Nitrile rubber	Chromate	14	Magnet	Plastic	

Repair parts list

Part name / Bore size (mm)	Kit No.	Repair parts No.
ø63	SSD-G1-63K	❷ ❺ ❼ ❾
ø80	SSD-G1-80K	
ø100	SSD-G1-100K	

Dimensions

● SSD-G1L/G4L-25 (with switch)

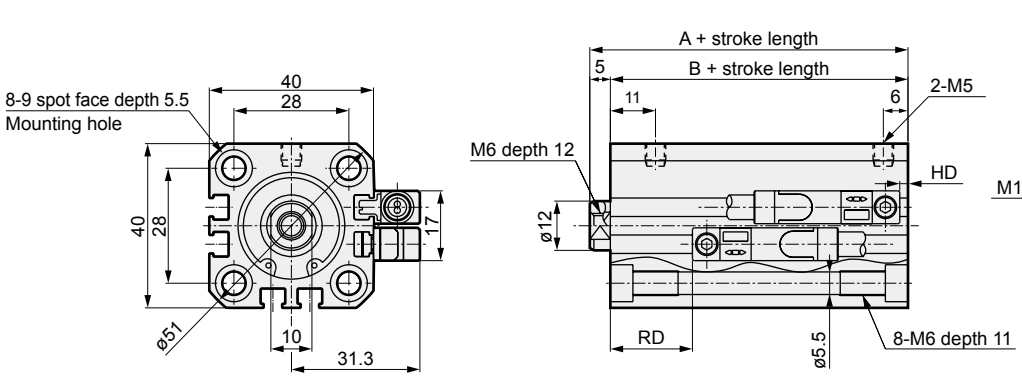

● Rod end male thread

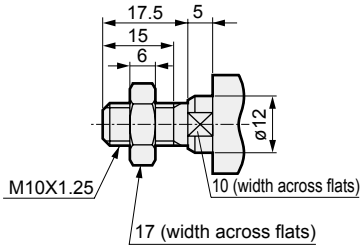

● SSD-G1/G4-25 (without switch)

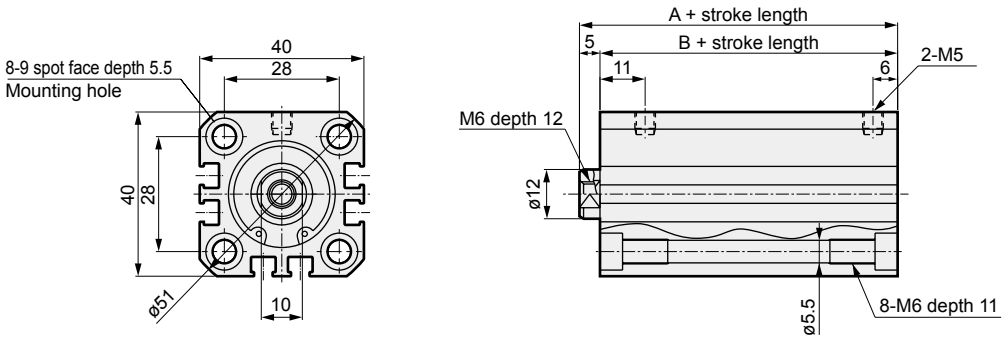

Code	Without switch		Dimensions with switch			
Bore size (mm)	A *1	B *1	A *1	B *1	RD *2	HD
ø25	37.5	32.5	47.5	42.5	20	2

*1 : To calculate A+ stroke length or B+ stroke length when using custom stroke length, apply the next longer standard stroke length (instead of the custom stroke length) to the stroke length value.
(Example) If the custom stroke length is 17 mm, apply the standard stroke length 20 mm.

*2 : RD dimensions for custom stroke length differ from these dimensions according to the setting.

*3 : For dimensions of individual accessories, refer to pages 1108 to 1115.

Dimensions

● SSD-G1L/G4L-32 to 100 (with switch)

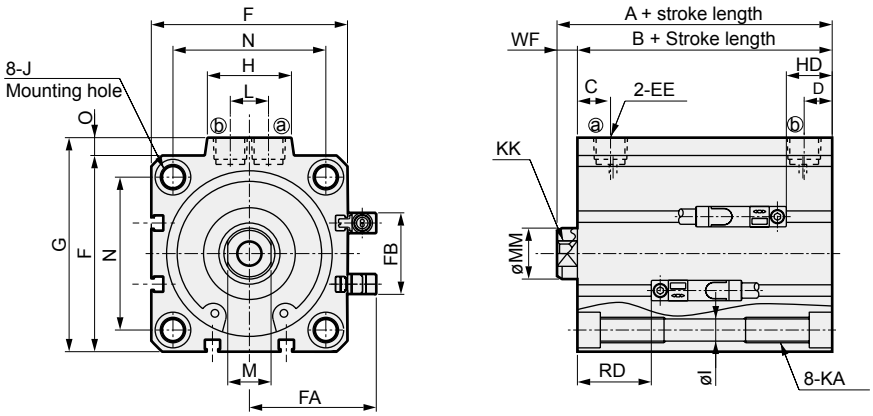

● Rod end male thread

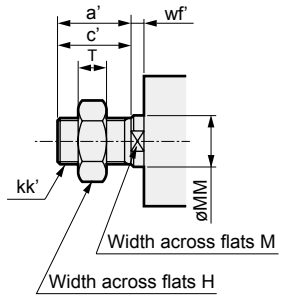

● SSD-G1/G4-32 to 100 (without switch)

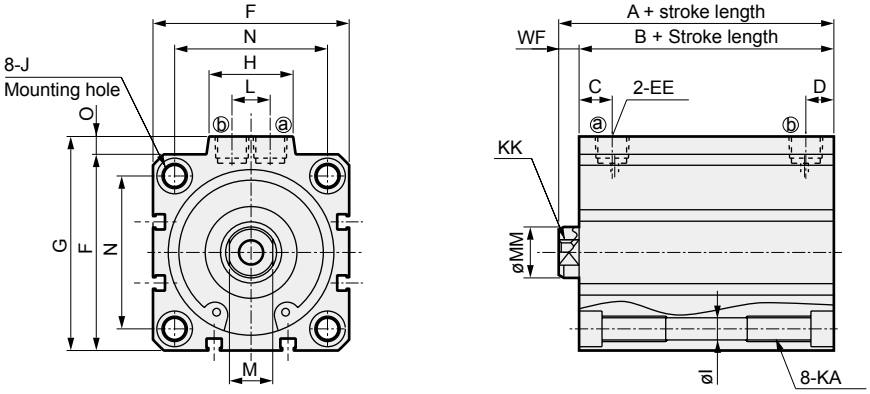

[Bore size ø100]

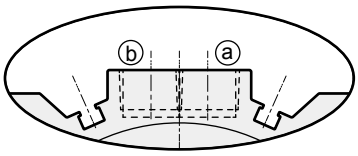

* Only for ø100, the port surface has switch grooves.

Code / Bore size (mm)	Without switch A *1	Without switch B *1	Common dimensions with switch A *1	B *1	C	D	EE	F	FA	FB	G	H	I	J	KA	KK
ø32	40	33	50	43	8	8	Rc1/8	45	33.8	24	49.5	24	5.5	9 spot face depth 5.5	M6 depth 11	M8 depth 13
ø40	46.5	39.5	56.5	49.5	12	8.5	Rc1/8	52	37.3	31	57	24	5.5	9 spot face depth 5.5	M6 depth 11	M8 depth 13
ø50	48.5	40.5	58.5	50.5	10.5	10.5	Rc1/4	64	43.3	32	71	33	6.9	11 spot face depth 6.5	M8 depth 13	M10 depth 15
ø63	54	46	64	56	13	11	Rc1/4	77	49.8	32	84	33	8.7	14 spot face depth 9	M10 depth 25	M10 depth 15
ø80	63.5	53.5	73.5	63.5	16	13	Rc3/8	98	60.3	32	104	38	10.5	17.5 spot face depth 11	M12 depth 28	M16 depth 21
ø100	75	63	85	73	23	15	Rc3/8	117	69.8	32	123.5	38	10.5	17.5 spot face depth 11	M12 depth 28	M20 depth 27

Code / Bore size (mm)	Common dimensions with switch M	MM	N	O	WF	With T2YD type switch RD *2	HD
ø32	14	16	34	4.5	7	17.5	2
ø40	14	16	40	5	7	20.5	5.5
ø50	17	20	50	7	8	21	6
ø63	17	20	60	7	8	21.5	11
ø80	22	25	77	6	10	24	16
ø100	27	30	94	6.5	12	28	21.5

*1 : To calculate A+ stroke length or B+ stroke length when using custom stroke length, apply the next longer standard stroke length (instead of the custom stroke length) to the stroke length value.
(Example) If the custom stroke length is 17 mm, apply the standard stroke length 20 mm.

*2 : RD dimensions for custom stroke length differ from these dimensions according to the setting.

● Dimensions of rod end male thread part

Code / Bore size (mm)	a'	C'	H	kk'	M	MM	T	wf'
ø32	23.5	20.5	22	M14×1.5	14	16	8	5
ø40	23.5	20.5	22	M14×1.5	14	16	8	5
ø50	28.5	26	27	M18×1.5	17	20	11	5
ø63	28.5	26	27	M18×1.5	17	20	11	5
ø80	35.5	32.5	32	M22×1.5	22	25	13	8
ø100	35.5	32.5	41	M26×1.5	27	30	16	8

For dimensions of individual accessories, refer to pages 1108 to 1115.

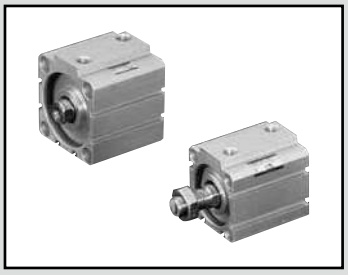

Compact cylinder
Double acting/single rod/high load/coil scraper

SSD-KG1 Series

Compact cylinder
Double acting/single rod/high load/anti-spatter adherence

SSD-KG4 Series

● Bore size: ø25/ø32/ø40/ø50/ø63/ø80/ø100

JIS symbol

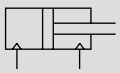

RoHS CAD

Specifications

Item	SSD-KG1/KG4 SSD-KG1L/KG4L (with switch)						
Bore size mm	ø25	ø32	ø40	ø50	ø63	ø80	ø100
Actuation	Double acting						
Working fluid	Compressed air						
Max. working pressure MPa	1.0 (≈150 psi, 10 bar)						
Min. working pressure MPa	0.15 (≈22 psi, 1.5 bar)				0.1 (≈15 psi, 1 bar)		
Proof pressure MPa	1.6 (≈230 psi, 16 bar)						
Ambient temperature °C	-10 (14°F) to 60 (140°F) (no freezing)						
Port size	M5	Rc1/8		Rc1/4		Rc3/8	
Stroke tolerance mm	+2.0 0						
Working piston speed mm/s	50 to 500				50 to 300		
Cushion	Rubber cushion						
Lubrication	Not required (use turbine oil ISO VG32 if necessary for lubrication)						
Allowable absorbed energy J	0.16	0.40	0.63	0.98	1.56	2.51	3.92

Stroke length

Bore size (mm)	Standard stroke length (mm)	Max. stroke (mm)	Min. stroke (mm)/strong magnetic field proof switch
ø25	10, 15, 20, 25, 30, 40 50, 60, 70, 80, 90, 100	*2) 300	1(10)
ø32			
ø40			
ø50			
ø63	10, 20, 30, 40, 50 60, 70, 80, 90, 100		
ø80			
ø100			

*1) The custom stroke length is available in 1 mm increments.
*2) Stroke length over standard to maximum is available in increments of 10.
(Example) ø25: 110, 120, 130, 140, 150…
*3) Dimensions of custom stroke length (Example: 64 mm stroke length) are the same as the next stroke length up (Example: 70 mm stroke length).
*4) From 151 to 300 for ø25 to ø50, or 201 to 300 for ø63 to ø100, internal structure and total length are different in some products.

Switch specifications

Item	Proximity 2-wire T2YD
Applications	Dedicated for programmable controller
Lamp	Red/green LED (Lit when ON)
Load voltage	24 VDC ±10%
Load current	5 to 20 mA
Internal voltage drop	6V or less
Leakage current	1.0 mA or less
Output delay time *1 (ON delay, OFF delay)	60 ms or less
Lead wire length	1 m (oil resistant vinyl cabtyre cable ø 6, 0.5 mm^2 x 2-conductor) *2, *3
Insulation resistance	100 MΩ or more at 500 VDC megger
Withstand voltage	No failure after 1 minute of 1,000 VAC application.
Shock resistance	980 m/s^2
Ambient temperature	-10 to +60°C
Degree of protection	JIS C0920 (water-tight), IEC standards IP67, oil resistance
Weight g	1 m:61 3 m:166 5 m:272

*1: Indicates the time from magnetic sensor detection of the piston magnet until switch output.
*2: 3 m and 5 m lead wires are available as options.
*3: Flame-resistant lead wires are available as options.
*4: Switch for AC magnetic field (T2YD) cannot be used in DC magnetic field.

Cylinder weight table (the weight of the switches is when there are 2 cylinder switches.)

(Unit: g)

Stroke length (mm)	10		15		20		25		30		40		50		60		70		80		90		100	
Bore size (mm)	No switch	Switch	No switch	Switch	No switch	Switch	No switch	Switch	No switch	Switch	No switch	Switch	No switch	Switch	No switch	Switch	No switch	Switch	No switch	Switch	No switch	Switch	No switch	Switch
ø25	162	253	178	269	194	285	209	300	226	317	258	349	290	381	322	413	354	445	386	477	418	509	450	541
ø32	249	363	270	384	292	406	314	428	336	450	379	493	422	536	465	579	508	622	551	665	594	708	637	751
ø40	345	488	372	515	398	541	424	567	451	594	504	647	557	700	610	753	663	806	716	859	769	912	822	965
ø50	549	743	591	785	634	828	677	871	718	912	802	996	886	1080	970	1164	1054	1248	1138	1332	1222	1416	1306	1500
ø63	782	1061	-	-	892	1171	-	-	1003	1282	1113	1392	1223	1502	1333	1612	1443	1722	1553	1832	1663	1942	1773	2052
ø80	1382	1795	-	-	1555	1968	-	-	1729	2142	1902	2315	2075	2488	2248	2661	2421	2834	2594	3007	2767	3180	2940	3353
ø100	2029	2596	-	-	2257	2824	-	-	2484	3051	2712	3279	2940	3507	3168	3735	3396	3963	3624	4191	3852	4419	4080	4647

(Unit: g)

Stroke length (mm)	110		120		130		140		150		160		170		180		190		200	
Bore size (mm)	No switch	Switch	No switch	Switch	No switch	Switch	No switch	Switch	No switch	Switch	No switch	Switch	No switch	Switch	No switch	Switch	No switch	Switch	No switch	Switch
ø25	482	573	514	605	546	637	578	669	610	701	642	733	674	765	706	797	738	829	770	861
ø32	680	794	723	837	766	880	809	923	852	966	894	1008	937	1051	980	1094	1023	1137	1066	1180
ø40	875	1018	928	1071	981	1124	1034	1177	1087	1230	1140	1283	1193	1336	1246	1389	1299	1442	1352	1495
ø50	1390	1584	1474	1668	1558	1752	1642	1836	1726	1920	1824	2018	1909	2103	1994	2188	2079	2273	2164	2358
ø63	1883	2162	1993	2272	2103	2382	2213	2492	2323	2602	2433	2712	2543	2822	2653	2932	2763	3042	2873	3152
ø80	3113	3526	3286	3699	3459	3872	3632	4045	3805	4218	3978	4391	4151	4564	4324	4737	4497	4910	4670	5083
ø100	4308	4875	4536	5103	4764	5331	4992	5559	5220	5787	5448	6015	5676	6243	5904	6471	6132	6699	6360	6927

(Unit: g)

Stroke length (mm)	210		220		230		240		250		260		270		280		290		300	
Bore size (mm)	No switch	Switch	No switch	Switch	No switch	Switch	No switch	Switch	No switch	Switch	No switch	Switch	No switch	Switch	No switch	Switch	No switch	Switch	No switch	Switch
ø25	813	893	845	925	877	957	909	989	941	1021	973	1053	1005	1085	1037	1117	1069	1149	1101	1181
ø32	1109	1223	1152	1266	1195	1309	1238	1352	1281	1395	1324	1438	1367	1481	1410	1524	1453	1567	1496	1610
ø40	1405	1548	1458	1601	1511	1654	1564	1707	1617	1760	1670	1813	1723	1866	1776	1919	1829	1972	1882	2025
ø50	2249	2443	2334	2528	2419	2613	2504	2698	2589	2783	2674	2868	2759	2953	2844	3038	2929	3123	3014	3208
ø63	2982	3261	3092	3371	3202	3481	3312	3591	3422	3701	3532	3811	3642	3921	3752	4031	3862	4141	3972	4251
ø80	4842	5255	5015	5428	5188	5601	5361	5774	5534	5947	5707	6120	5880	6293	6053	6466	6226	6639	6399	6812
ø100	6589	7156	6817	7384	7045	7612	7273	7840	7501	8068	7729	8296	7957	8524	8185	8752	8413	8980	8641	9208

Theoretical thrust table

(Unit: N)

Bore size (mm)	Operating direction	Working pressure MPa										
		0.1	0.15	0.2	0.3	0.4	0.5	0.6	0.7	0.8	0.9	1.0
ø25	Push	-	73.6	98.2	1.47×10^2	1.96×10^2	2.45×10^2	2.95×10^2	3.44×10^2	3.93×10^2	4.42×10^2	4.91×10^2
	Pull	-	56.7	75.6	1.13×10^2	1.51×10^2	1.89×10^2	2.27×10^2	2.64×10^2	3.02×10^2	3.40×10^2	3.78×10^2
ø32	Push	-	1.21×10^2	1.61×10^2	2.41×10^2	3.22×10^2	4.02×10^2	4.83×10^2	5.63×10^2	6.43×10^2	7.24×10^2	8.04×10^2
	Pull	-	90.5	1.21×10^2	1.81×10^2	2.41×10^2	3.02×10^2	3.62×10^2	4.22×10^2	4.83×10^2	5.43×10^2	6.03×10^2
ø40	Push	-	1.88×10^2	2.51×10^2	3.77×10^2	5.03×10^2	6.28×10^2	7.54×10^2	8.80×10^2	1.01×10^3	1.13×10^3	1.26×10^3
	Pull	-	1.58×10^2	2.11×10^2	3.17×10^2	4.22×10^2	5.28×10^2	6.33×10^2	7.39×10^2	8.44×10^2	9.50×10^2	1.06×10^3
ø50	Push	-	2.95×10^2	3.93×10^2	5.89×10^2	7.85×10^2	9.82×10^2	1.18×10^3	1.37×10^3	1.57×10^3	1.77×10^3	1.96×10^3
	Pull	-	2.47×10^2	3.30×10^2	4.95×10^2	6.60×10^2	8.25×10^2	9.90×10^2	1.15×10^3	1.32×10^3	1.48×10^3	1.65×10^3
ø63	Push	3.12×10^2	4.68×10^2	6.23×10^2	9.35×10^2	1.25×10^3	1.56×10^3	1.87×10^3	2.18×10^3	2.49×10^3	2.81×10^3	3.12×10^3
	Pull	2.80×10^2	4.20×10^2	5.61×10^2	8.41×10^2	1.12×10^3	1.40×10^3	1.68×10^3	1.96×10^3	2.24×10^3	2.52×10^3	2.80×10^3
ø80	Push	5.03×10^2	7.54×10^2	1.01×10^3	1.51×10^3	2.01×10^3	2.51×10^3	3.02×10^3	3.52×10^3	4.02×10^3	4.52×10^3	5.03×10^3
	Pull	4.54×10^2	6.80×10^2	9.07×10^2	1.36×10^3	1.81×10^3	2.27×10^3	2.72×10^3	3.17×10^3	3.63×10^3	4.08×10^3	4.54×10^3
ø100	Push	7.85×10^2	1.18×10^3	1.57×10^3	2.36×10^3	3.14×10^3	3.93×10^3	4.71×10^3	5.50×10^3	6.28×10^3	7.07×10^3	7.85×10^3
	Pull	7.15×10^2	1.07×10^3	1.43×10^3	2.14×10^3	2.86×10^3	3.57×10^3	4.29×10^3	5.00×10^3	5.72×10^3	6.43×10^3	7.15×10^3

SCP*3
CMK2
CMA2
SCM
SCG
SCA2
SCS2
CKV2
CAV2/COVP/N2
SSD2
SSG
SSD
CAT
MDC2
MVC
SMG
MSD/MSDG
FC*
STK
SRL3
SRG3
SRM3
SRT3
MRL2
MRG2
SM-25
ShkAbs
FJ
FK
Spd Contr
Ending

How to order

Without switch (without magnet for switch)

SSD-KG4 – 32 - 10 ———— N - LB - I

With switch (built-in magnet for switch)

SSD-KG4L - 32 - 10 - T2YD - R - N - LB - I

Ⓐ Model No.

Ⓑ Bore size

Ⓒ Stroke length

Ⓓ Switch model No. *4

Ⓔ Switch quantity

Ⓕ Option

Ⓖ Mounting bracket *1 *2

Ⓗ Accessory *3

Code	Description
Ⓐ Model No.	
SSD-KG1	Double acting/single rod/high load/coil scraper
SSD-KG1L	Double acting/single rod/high load/coil scraper/with switch
SSD-KG4	Double acting/single rod/high load/anti-spatter adherence
SSD-KG4L	Double acting/single rod/high load/anti-spatter adherence/with switch

Code	Description
Ⓑ Bore size (mm)	
25	ø25
32	ø32
40	ø40
50	ø50
63	ø63
80	ø80
100	ø100

Ⓒ Stroke length (mm)

Refer to the stroke length table on the following page.

Ⓓ Switch model No.

Axial lead wire	Radial lead wire	Contact	Voltage	Display	Lead wire
T2YD*	—	Proximity	DC	2-color display AC magnetic field	2-wire
T2YDT*	—				

* Lead wire length	
Blank	1 m (standard)
3	3 m (option)
5	5 m (option)

Ⓔ Switch quantity	
R	1 on rod side
H	1 on head side
D	2

Ⓕ Option	
Blank	Rod end female thread
N	Rod end male thread

Ⓖ Mounting bracket	
LB	Axial foot
LB2	Axial foot (compact)
CB	Clevis bracket (pin and snap ring included)
CB2	Clevis bracket (compact) (pin and snap ring included)
FA	Rod side flange
FB	Head side flange

Ⓗ Accessory (available when rod end male thread "N" is selected)	
I	Rod eye
I2	Rod eye (compact)
Y	Rod clevis (pin and snap ring included)
Y2	Rod clevis (compact) (pin and snap ring included)

⚠ Precautions for model No. selection

*1 : The mounting bracket is included at shipment.
*2 : The projection dimension of piston rod WF when LB2 or FA is selected is different from that of the standard. Refer to the dimensions on pages 1109 and 1110. The number of the specified protruding dimension will be added at the end of the model No. printed on the metal plate on the body.
*3 : "I" and "Y" cannot be selected together.
*4 : Switches are shipped with the product. Contact CKD if assembling before shipment is necessary.

[Example of model No.]

SSD-KG4L-32-10-T2YD-R-N

Model: Compact cylinder
Double acting, high load, anti-spatter adherence

Ⓑ Bore size : ø32 mm
Ⓒ Stroke length : 10 mm
Ⓓ Switch model No. : Proximity switch for AC magnetic field T2YD
· Lead wire length 1 m
Ⓔ Switch quantity : 1 on rod side
Ⓕ Option : Rod end male thread

How to order switch

SW - **T2YD**

Switch model No.
(Item Ⓓ on page 1256)

[Stroke length table]

Stroke length (mm)		Applicable bore size						
		ø25	ø32	ø40	ø50	ø63	ø80	ø100
Standard stroke length	10	●	●	●	●	●	●	●
	15	●	●	●	●			
	20	●	●	●	●	●	●	●
	25	●	●	●	●			
	30	●	●	●	●	●	●	●
	40	●	●	●	●	●	●	●
	50	●	●	●	●	●	●	●
	60	●	●	●	●	●	●	●
	70	●	●	●	●	●	●	●
	80	●	●	●	●	●	●	●
	90	●	●	●	●	●	●	●
	100	●	●	●	●	●	●	●
Min. stroke length (mm) *1		1						
Max. stroke length (mm)		300						
Custom stroke length *2		In 1 mm increments						

*1 : Less than 10 mm stroke length with AC magnetic field proof switch is not available.
*2 : The total length is the same as that of the next longer standard stroke length.

How to order mounting bracket

Bore size (mm) / Mounting bracket	ø25	ø32	ø40	ø50	ø63	ø80	ø100
Foot (LB)	SSD-LB-25	SSD-LB-32	SSD-LB-40	SSD-LB-50	SSD-LB-63	SSD-LB-80	SSD-LB-100
Foot (LB2)	SSD-LB2-25	SSD-LB2-32	SSD-LB2-40	SSD-LB2-50	SSD-LB2-63	SSD-LB2-80	SSD-LB2-100
Flange (FA/FB)	SSD-FA-25	SSD-FA-32	SSD-FA-40	SSD-FA-50	SSD-FA-63	SSD-FA-80	SSD-FA-100
Clevis bracket (CB)	SSD-CB-25	SSD-CB-32	SSD-CB-40	SSD-CB-50	SSD-CB-63	SSD-CB-80	SSD-CB-100
Clevis bracket (CB2)	SSD-CB2-25	SSD-CB2-32	SSD-CB2-40	SSD-CB2-50	SSD-CB2-63	SSD-CB2-80	SSD-CB2-100

*1: The foot mounting bracket is provided as 2 pcs./set.

Internal structure and parts list

● SSD-KG1L/KG4L-25 (double acting/single rod high load/anti-spatter adherence/with switch)

ø25: Over 150 to 300 mm stroke length

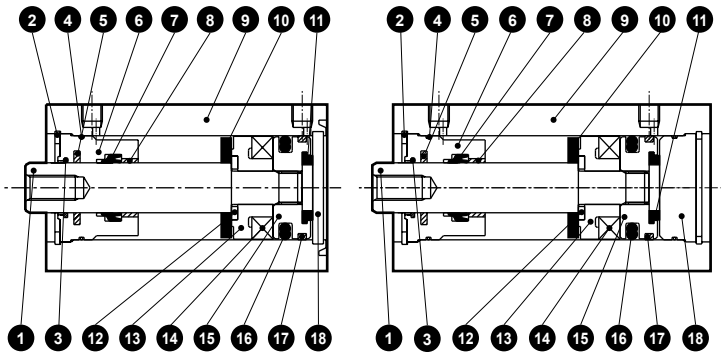

● SSD-KG1L/KG4L-32 to 50 (double acting/single rod high load/anti-spatter adherence/with switch)

ø32 to ø50: Over 150 to 300 mm stroke length

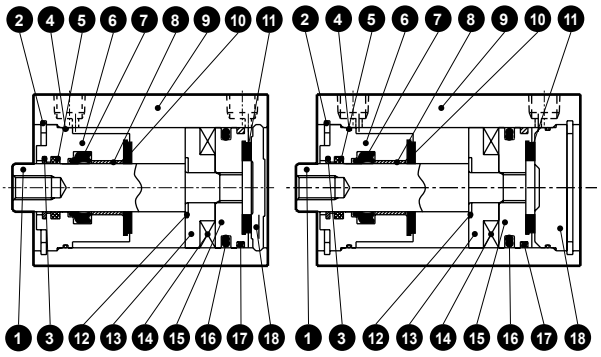

● SSD-KG1/KG4-25 (double acting/single rod high load/anti-spatter adherence)

ø25: Over 150 to 300 mm stroke length

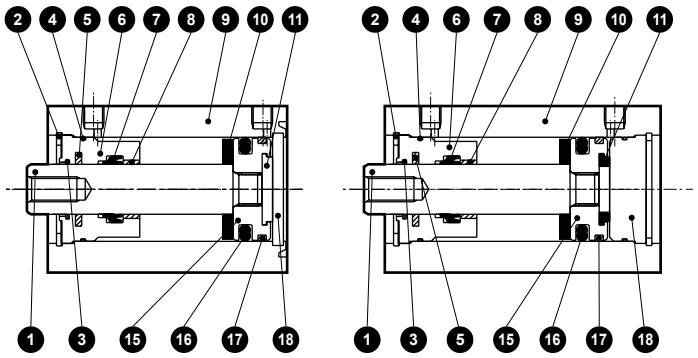

● SSD-KG1/KG4-32 to 50 (double acting/single rod high load/anti-spatter adherence)

ø32 to ø50: Over 150 to 300 mm stroke length

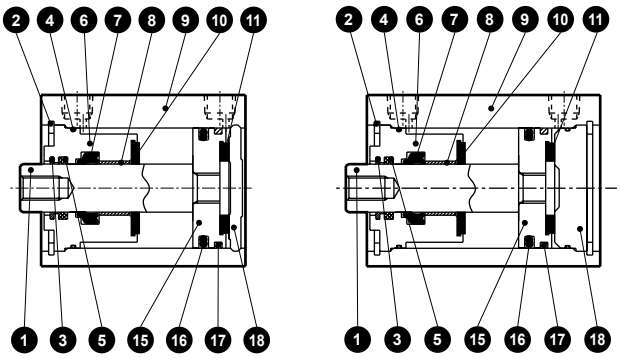

No.	Part name	Material	Remarks	No.	Part name	Material	Remarks
1	Piston rod	ø25: Stainless steel, ø32 to ø50: Steel	Industrial chrome plating	10	Cushion rubber R	Urethane rubber	
				11	Cushion rubber H	Urethane rubber	
2	C type snap ring for hole	Steel	Zinc phosphate	12	Spacer washer	Stainless steel	
3	Coil scraper	Phosphor bronze		13	Spacer	Special resin	
4	Rod metal gasket	Nitrile rubber		14	Magnet	Plastic	
5	Lube keeping structure	Special rubber	G4 only	15	Piston	Aluminum alloy	Chromate
6	Rod metal	Special aluminum	Alumite	16	Piston packing	Nitrile rubber	
7	Rod packing	Nitrile rubber		17	Wear ring	Polyacetal resin	
8	Bush	Oiles drymet		18	Cover	ø25: Stainless steel ø32 to ø50: Aluminum alloy	Chromate (ø32 to ø50) (*1)
9	Tube body	Aluminum alloy	Hard alumite				

*1 : For cover of long stroke type for ø25, Material: Aluminum alloy, Remarks: Chromate treatment.
*2 : For dimensions of individual accessories, refer to pages 1108 to 1115.

Repair parts list

Part name / Bore size (mm)	Kit No.	Repair parts No.
ø25	SSD-KG1-25K	❸ ❹ ❼ ❿ ⓫ ⓰ ⓱
ø32	SSD-KG1-32K	
ø40	SSD-KG1-40K	
ø50	SSD-KG1-50K	

Internal structure and parts list

● SSD-KG1L/KG4L-63 to 100 (double acting/single rod high load/anti-spatter adherence/with switch)

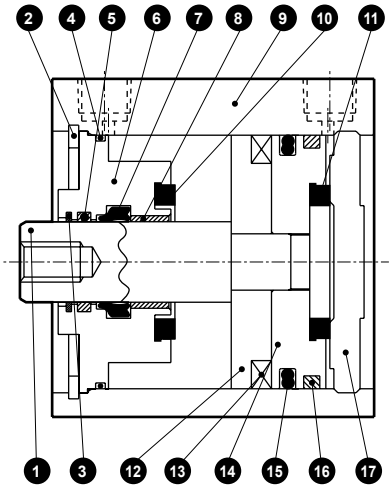

ø63 to ø100: Over 200 to 300 mm stroke length

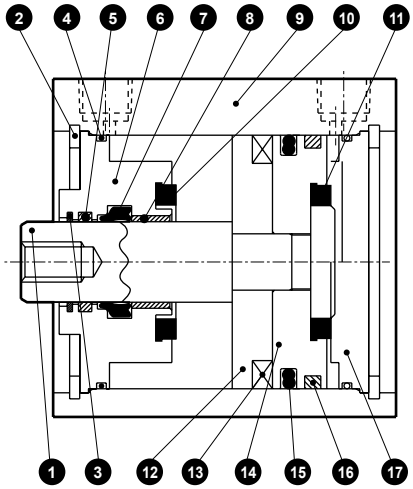

● SSD-KG1/KG4-63 to 100 (double acting/single rod high load/anti-spatter adherence)

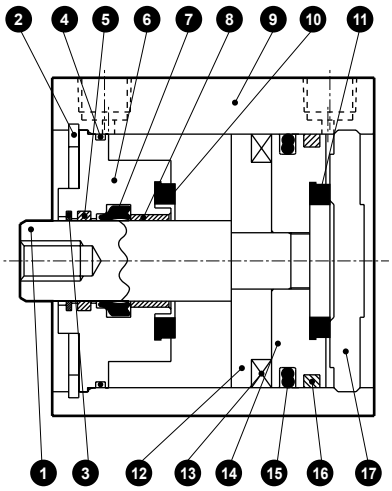

ø63 to ø100: Over 200 to 300 mm stroke length

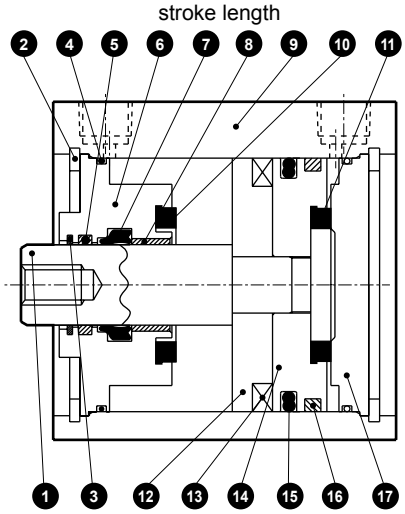

No.	Part name	Material	Remarks
1	Piston rod	Steel	Industrial chrome plating
2	C type snap ring for hole	Steel	Zinc phosphate
3	Coil scraper	Phosphor bronze	
4	Rod metal gasket	Nitrile rubber	
5	Lube keeping structure	Special rubber	G4 only
6	Rod metal	Aluminum alloy	Chromate
7	Rod packing	Nitrile rubber	
8	Bush	Oiles drymet	
9	Tube body	Aluminum alloy	Hard alumite

No.	Part name	Material	Remarks
10	Cushion rubber R	Urethane rubber	
11	Cushion rubber H	Urethane rubber	
12	Spacer	Aluminum alloy	Chromate
13	Magnet	Plastic	
14	Piston	Aluminum alloy	Chromate
15	Piston packing	Nitrile rubber	
16	Wear ring	Polyacetal resin	
17	Cover	Aluminum alloy	Chromate

Repair parts list

Part name / Bore size (mm)	Kit No.	Repair parts No.
ø63	SSD-KG1-63K	3 4 7 10 11 15 16
ø80	SSD-KG1-80K	
ø100	SSD-KG1-100K	

SCP*3
CMK2
CMA2
SCM
SCG
SCA2
SCS2
CKV2
CAV2/COVP/N2
SSD2
SSG
SSD
CAT
MDC2
MVC
SMG
MSD/MSDG
FC*
STK
SRL3
SRG3
SRM3
SRT3
MRL2
MRG2
SM-25
ShkAbs
FJ
FK
Spd Contr
Ending

Dimensions

● SSD-KG1L/KG4L-25 (with switch)

● Rod end male thread

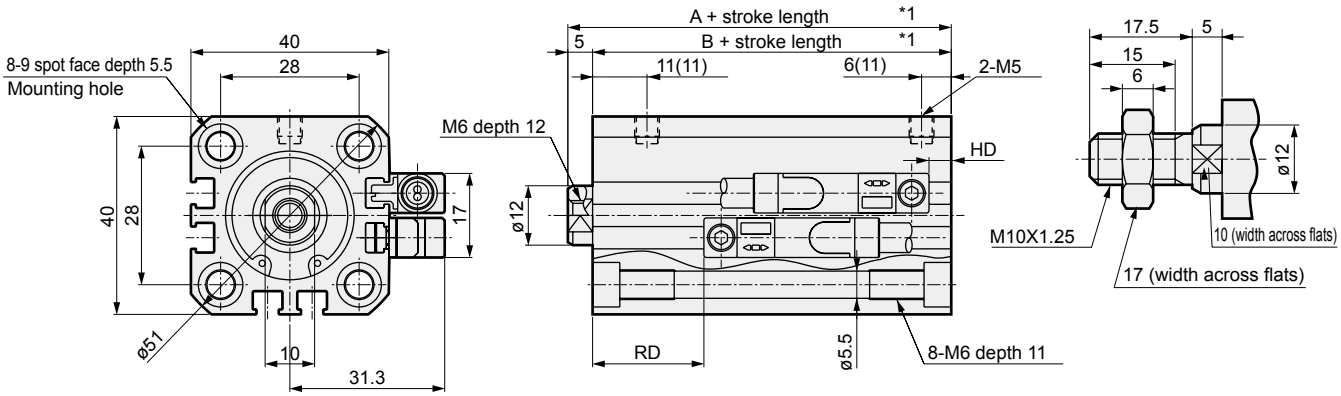

● SSD-KG1/KG4-25 (without switch)

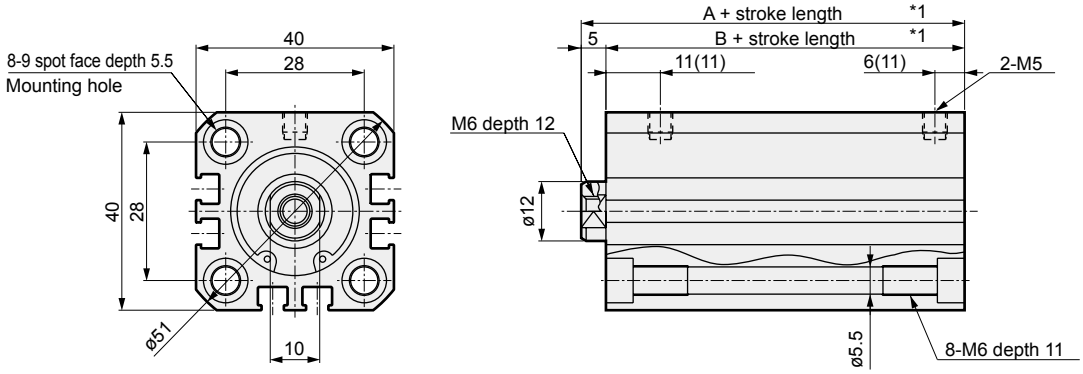

Code	Without switch		Dimensions with switch			
Bore size (mm)	A *1	B *1	A *1	B *1	RD *2,*3	HD *2,*3
ø25	42.5	37.5	52.5	47.5	22.5(27.5)	4.5(13)

● Table 2

Code	Without switch		Dimensions with switch	
Bore size (mm)	A *1	B *1	A *1	B *1
ø25	56	51	66	61

*1 : To calculate A+ stroke length or B+ stroke length when using custom stroke length, apply the next longer standard stroke length (instead of the custom stroke length) to the stroke length value. When longer than 150 mm stroke, A and B dimensions are indicated in Table 2. In addition, there is no 9 spot face.
(Example) If the custom stroke length is 17 mm, apply the standard stroke length 20 mm.

*2 : When longer than 150 mm stroke, HD and RD dimensions are indicated in ( ).

*3 : RD dimensions for custom stroke length differ from these dimensions according to the setting.

*4 : For dimensions of individual accessories, refer to pages 1108 to 1115.

Dimensions

● SSD-KG1L/KG4L-32 to 100 (with switch)

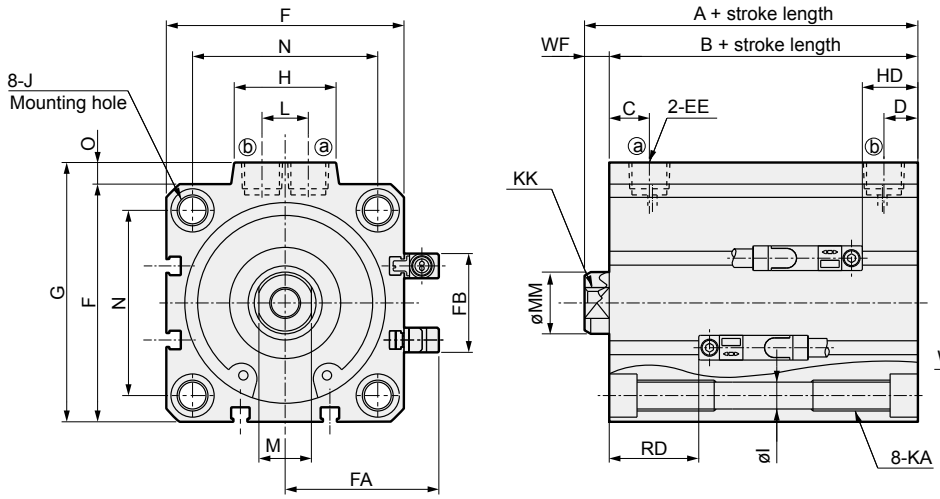

● Rod end male thread

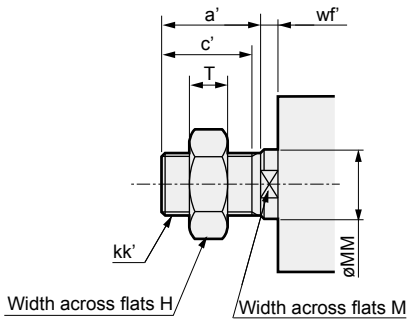

[Bore size ø100]

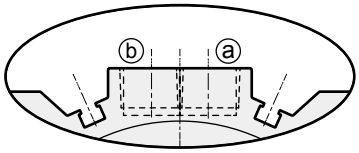

* Only for ø100, the port surface has switch grooves.

Code / Bore size (mm)	Dimensions with switch													
	A *1	B *1	C	D *2	EE	F	FA	FB	G	H	I	J	KA	KK
ø32	60	53	8	8(8)	Rc1/8	45	33.8	24	49.5	24	5.5	9 spot face depth 5.5	M6 depth 11	M8 depth 13
ø40	66.5	59.5	12	8.5(12)	Rc1/8	52	37.3	31	57	24	5.5	9 spot face depth 5.5	M6 depth 11	M8 depth 13
ø50	68.5	60.5	10.5	10.5(10.5)	Rc1/4	64	43.3	32	71	33	6.9	11 spot face depth 6.5	M8 depth 13	M10 depth 15
ø63	74	66	13	11(13)	Rc1/4	77	49.8	32	84	33	8.7	14 spot face depth 9	M10 depth 25	M10 depth 15
ø80	83.5	73.5	16	13(16)	Rc3/8	98	60.3	32	104	38	10.5	17.5 spot face depth 11	M12 depth 28	M16 depth 21
ø100	95	83	23	15(23)	Rc3/8	117	69.8	32	123.5	38	10.5	17.5 spot face depth 11	M12 depth 28	M20 depth 27

Code / Bore size (mm)	Dimensions with switch						With T2YD type switch	
	L	M	MM	N	O	WF	RD *2,*3	HD *2
ø32	10	14	16	34	4.5	7	25.5(25.5)	9.5(17)
ø40	10	14	16	40	5	7	31(31)	10.5(20)
ø50	15	17	20	50	7	8	31(36)	11.5(20.5)
ø63	15	17	20	60	7	8	29(34)	18(23.5)
ø80	15	22	25	77	6	10	31.5(36.5)	24(29.5)
ø100	15	27	30	94	6.5	12	35.5(40.5)	29.5(35)

*1 : To calculate A+ stroke length or B+ stroke length when using custom stroke length, apply the next longer standard stroke length (instead of the custom stroke length) to the stroke length value. (Example) If the custom stroke length is 17 mm, apply the standard stroke length 20 mm. When longer than 150 mm stroke for ø32 to ø50 or longer than 200 mm stroke for ø63 to ø100, AB dimensions are indicated in Table 2. In addition, there is no spot face J.

*2 : When longer than 150 mm stroke for ø32 to ø50 or longer than 200 mm stroke for ø63 to ø100, HD, RD, and D dimensions are indicated in ( ).

*3 : RD dimensions for custom stroke length differ from these dimensions according to the setting.

*4 : For dimensions of individual accessories, refer to pages 1108 to 1115.

● Table 2

Code / Bore size (mm)	With switch	
	A *1	B *1
ø32	67.5	60.5
ø40	76	69
ø50	82	74
ø63	84	76
ø80	93.5	83.5
ø100	105	93

● Dimensions of rod end male thread part

Code / Bore size (mm)	a'	C'	H	kk'	M	MM	T	wf'
ø32	23.5	20.5	22	M14×1.5	14	16	8	5
ø40	23.5	20.5	22	M14×1.5	14	16	8	5
ø50	28.5	26	27	M18×1.5	17	20	11	5
ø63	28.5	26	27	M18×1.5	17	20	11	5
ø80	35.5	32.5	32	M22×1.5	22	25	13	8
ø100	35.5	32.5	41	M26×1.5	27	30	16	8

Dimensions

● SSD-KG1/KG4-32 to 100 (without switch)

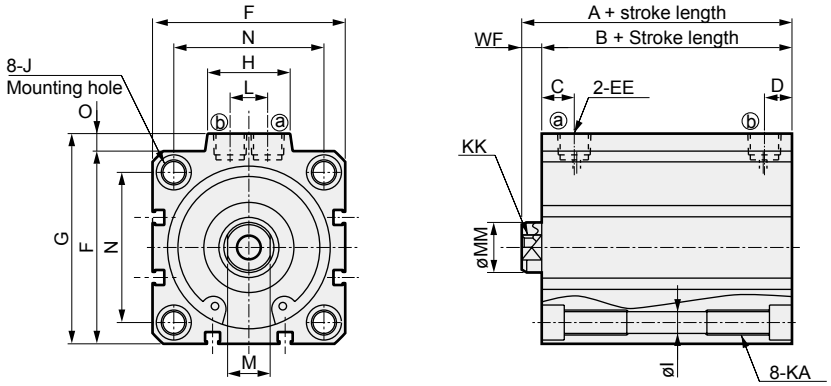

● Rod end male thread

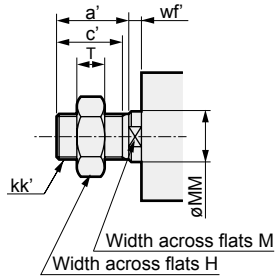

[Bore size ø100]

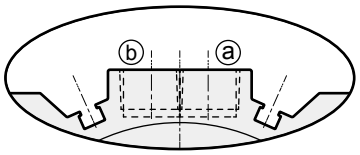

* Only for ø100, the port surface has switch grooves.

Code / Bore size (mm)	Dimensions without switch																	
	A *1	B *1	C	D *2	EE	F	G	H	I	J	KA	KK	L	M	MM	N	O	WF
ø32	50	43	8	8(8)	Rc1/8	45	49.5	24	5.5	9 spot face depth 5.5	M6 depth 11	M8 depth 13	10	14	16	34	4.5	7
ø40	56.5	49.5	12	8.5(12)	Rc1/8	52	57	24	5.5	9 spot face depth 5.5	M6 depth 11	M8 depth 13	10	14	16	40	5	7
ø50	58.5	50.5	10.5	10.5(10.5)	Rc1/4	64	71	33	6.9	11 spot face depth 6.5	M8 depth 13	M10 depth 15	15	17	20	50	7	8
ø63	64	56	13	11(13)	Rc1/4	77	84	33	8.7	14 spot face depth 9	M10 depth 25	M10 depth 15	15	17	20	60	7	8
ø80	73.5	63.5	16	13(16)	Rc3/8	98	104	38	10.5	17.5 spot face depth 11	M12 depth 28	M16 depth 21	15	22	25	77	6	10
ø100	85	73	23	15(23)	Rc3/8	117	123.5	38	10.5	17.5 spot face depth 11	M12 depth 28	M20 depth 27	15	27	30	94	6.5	12

● Table 2

Code / Bore size (mm)	Dimensions without switch	
	A *1	B *1
ø32	57.5	50.5
ø40	66	59
ø50	72	64
ø63	74	66
ø80	83.5	73.5
ø100	95	83

*1 : To calculate A+ stroke length or B+ stroke length when using custom stroke length, apply the next longer standard stroke length (instead of the custom stroke length) to the stroke length value.
(Example) If the custom stroke length is 17 mm, apply the standard stroke length 20 mm.
When longer than 150 mm stroke for ø32 to ø50 or longer than 200 mm stroke for ø63 to ø100, AB dimensions are indicated in Table 2. In addition, there is no spot face J.

*2 : When longer than 150 mm stroke for ø32 to ø50 or longer than 200 mm stroke for ø63 to ø100, D dimensions are indicated in ( ).

● Dimensions of rod end male thread part

Code / Bore size (mm)	a'	C'	H	kk'	M	MM	T	wf'
ø32	23.5	20.5	22	M14×1.5	14	16	8	5
ø40	23.5	20.5	22	M14×1.5	14	16	8	5
ø50	28.5	26	27	M18×1.5	17	20	11	5
ø63	28.5	26	27	M18×1.5	17	20	11	5
ø80	35.5	32.5	32	M22×1.5	22	25	13	8
ø100	35.5	32.5	41	M26×1.5	27	30	16	8

* For dimensions of individual accessories, refer to pages 1108 to 1115.

MEMO

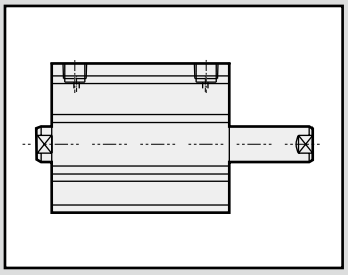

Compact cylinder
Double acting/double rod/coil scraper

SSD-DG1 Series

Compact cylinder
Double acting/double rod/anti-spatter adherence

SSD-DG4 Series

● Bore size: ø25/ø32/ø40/ø50/ø63/ø80/ø100

JIS symbol

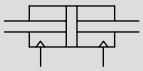

RoHS CAD

Specifications

Item	SSD-DG1/DG4 SSD-DG1L/DG4L (with switch)						
Bore size mm	ø25	ø32	ø40	ø50	ø63	ø80	ø100
Actuation	Double acting						
Working fluid	Compressed air						
Max. working pressure MPa	1.0 (≈150 psi, 10 bar)						
Min. working pressure MPa	0.2 (≈29 psi, 2 bar)				0.15 (≈22 psi, 1.5 bar)		
Proof pressure MPa	1.6 (≈230 psi, 16 bar)						
Ambient temperature °C	-10 (14°F) to 60 (140°F) (no freezing)						
Port size	Rc1/8			Rc1/4		Rc3/8	
Stroke tolerance mm	+1.0 0						
Working piston speed mm/s	50 to 500					50 to 300	
Cushion	None						
Lubrication	Not required (use turbine oil ISO VG32 if necessary for lubrication)						
Allowable absorbed energy J	0.021	0.025	0.092	0.1	0.12	0.27	0.56

Stroke length

Bore size (mm)	Standard stroke length (mm)	Max. stroke length (mm)	Min. stroke length (mm) (with strong magnetic field proof switch)
ø25	5, 10, 15, 20, 25, 30, 40, 50	50	1 (10) *1) The value in ( ) is for types with one or two switches.
ø32			
ø40			
ø50			
ø63	5, 10, 20, 30, 40, 50	50	
ø80			
ø100			

*1) The custom stroke length is available in 1 mm increments.

Switch specifications

● Proximity switch for strong magnetic field proof

Item	Proximity 2-wire T2YD
Applications	Dedicated for programmable controller
Indicator lamp	Red/green LED (Lit when ON)
Load voltage	24 VDC ±10%
Load current	5 to 20 mA
Internal voltage drop	6V or less
Leakage current	1.0mA or less
Output delay time *1 (ON delay, OFF delay)	60 ms or less
Lead wire length	1 m (oil resistant vinyl cabtyre cable ø 6, 0.5 mm^2 x 2-conductor) *2, *3
Insulation resistance	100 MΩ or more at 500 VDC megger
Withstand voltage	No failure after 1 minute of 1,000 VAC application.
Shock resistance	980 m/s^2
Ambient temperature	-10 to +60°C
Degree of protection	JIS C0920 (water-tight), IEC standards IP67, oil resistance
Weight g	1 m:61 3 m:166 5 m:272

*1: Indicates the time from magnetic sensor detection of the piston magnet until switch output.
*2: 3 m and 5 m lead wires are available as options.
*3: Flame-resistant lead wires are available as options.
*4: Switch for AC magnetic field (T2YD) cannot be used in DC magnetic field.

Cylinder weight table (the weight of the switches is when there are 2 cylinder switches.)

(Unit: g)

Stroke length (mm)	5		10		15		20		25		30		40		50	
Bore size (mm)	No switch	Switch	No switch	Switch	No switch	Switch	No switch	Switch	No switch	Switch	No switch	Switch	No switch	Switch	No switch	Switch
ø25	234	325	249	340	265	356	281	372	297	388	313	403	344	435	375	466
ø32	308	423	354	468	399	514	446	560	490	605	537	651	631	741	725	831
ø40	446	589	473	616	499	642	526	669	553	696	579	732	632	775	685	828
ø50	696	890	746	940	796	989	846	1041	896	1089	946	1139	1046	1239	1149	1343
ø63	1128	1254	1203	1567	-	-	1353	1717	-	-	1503	1867	1654	2018	1804	2168
ø80	1995	1925	2112	2042	-	-	2345	2798	-	-	2578	3031	2812	3275	3045	3508
ø100	2984	3611	3153	3775	-	-	3490	4072	-	-	3828	4440	4165	4767	4503	5095

Theoretical thrust table

(Unit: N)

Bore size (mm)	Operating direction	Working pressure MPa									
		0.15	0.2	0.3	0.4	0.5	0.6	0.7	0.8	0.9	1.0
ø25	Push	-	98.2	1.47×10^2	1.96×10^2	2.45×10^2	2.95×10^2	3.44×10^2	3.93×10^2	4.42×10^2	4.91×10^2
	Pull	-	75.6	1.13×10^2	1.51×10^2	1.89×10^2	2.27×10^2	2.64×10^2	3.02×10^2	3.40×10^2	3.78×10^2
ø32	Push	-	1.61×10^2	2.41×10^2	3.22×10^2	4.02×10^2	4.83×10^2	5.63×10^2	6.43×10^2	7.24×10^2	8.04×10^2
	Pull	-	1.21×10^2	1.81×10^2	2.41×10^2	3.02×10^2	3.62×10^2	4.22×10^2	4.83×10^2	5.43×10^2	6.03×10^2
ø40	Push	-	2.51×10^2	3.77×10^2	5.03×10^2	6.28×10^2	7.54×10^2	8.80×10^2	1.01×10^3	1.13×10^3	1.26×10^3
	Pull	-	2.11×10^2	3.17×10^2	4.22×10^2	5.28×10^2	6.33×10^2	7.39×10^2	8.44×10^2	9.50×10^2	1.06×10^3
ø50	Push	-	3.93×10^2	5.89×10^2	7.85×10^2	9.82×10^2	1.18×10^3	1.37×10^3	1.57×10^3	1.77×10^3	1.96×10^3
	Pull	-	3.30×10^2	4.95×10^2	6.60×10^2	8.25×10^2	9.90×10^2	1.15×10^3	1.32×10^3	1.48×10^3	1.65×10^3
ø63	Push	4.68×10^2	6.23×10^2	9.35×10^2	1.25×10^3	1.56×10^3	1.87×10^3	2.18×10^3	2.49×10^3	2.81×10^3	3.12×10^3
	Pull	4.20×10^2	5.61×10^2	8.41×10^2	1.12×10^3	1.40×10^3	1.68×10^3	1.96×10^3	2.24×10^3	2.52×10^3	2.80×10^3
ø80	Push	7.54×10^2	1.01×10^3	1.51×10^3	2.01×10^3	2.51×10^3	3.02×10^3	3.52×10^3	4.02×10^3	4.52×10^3	5.03×10^3
	Pull	6.80×10^2	9.07×10^2	1.36×10^3	1.81×10^3	2.27×10^3	2.72×10^3	3.17×10^3	3.63×10^3	4.08×10^3	4.54×10^3
ø100	Push	1.18×10^3	1.57×10^3	2.36×10^3	3.14×10^3	3.93×10^3	4.71×10^3	5.50×10^3	6.28×10^3	7.07×10^3	7.85×10^3
	Pull	1.07×10^3	1.43×10^3	2.14×10^3	2.86×10^3	3.57×10^3	4.29×10^3	5.00×10^3	5.72×10^3	6.43×10^3	7.15×10^3

How to order

Without switch (without magnet for switch)

SSD-DG4 – 32 - 10 ——— N - LB - I

With switch (built-in magnet for switch)

SSD-DG4L - 32 - 10 - T2YD - R - N - LB - I

Ⓐ Model No.
Ⓑ Bore size
Ⓒ Stroke length
Ⓓ Switch model No. *4
Ⓔ Switch quantity
Ⓕ Option
Ⓖ Mounting bracket *1 *2
Ⓗ Accessory *3

Code	Description
Ⓐ Model No.	
SSD-DG1	Double acting/double rod/coil scraper
SSD-DG1L	Double acting/double rod/coil scraper/with switch
SSD-DG4	Double acting/double rod/anti-spatter adherence
SSD-DG4L	Double acting/double rod/anti-spatter adherence/with switch
Ⓑ Bore size (mm)	
25	ø25
32	ø32
40	ø40
50	ø50
63	ø63
80	ø80
100	ø100
Ⓒ Stroke length (mm)	
Refer to the stroke length table on the following page.	

Ⓓ Switch model No.

Axial lead wire	Radial lead wire	Contact	Voltage	Display	Lead wire
T2YD*	—	Proximity	DC	2-color display AC magnetic field	2-wire
T2YDT*	—				
T2YDU (made-to-order product)				Cable connector SW, strong magnetic field proof	

* Lead wire length	
Blank	1 m (standard)
3	3 m (option)
5	5 m (option)

Ⓔ Switch quantity	
R	1 on rod side
H	1 on head side
D	2

Ⓕ Option	
Blank	Rod end female thread
N	Rod end male thread

Ⓖ Mounting bracket	
LB	Axial foot
LB2	Axial foot (compact)
FA	Rod side flange

Ⓗ Accessory (available when rod end male thread "N" is selected)	
I	Rod eye
I2	Rod eye (compact)
Y	Rod clevis (pin and snap ring included)
Y2	Rod clevis (compact) (pin and snap ring included)

⚠ Precautions for model No. selection

*1 : The mounting bracket is included at shipment.
*2 : The projection dimension of piston rod WF when LB2 or FA is selected is different from that of the standard. Refer to the dimensions on pages 1109 and 1110. The number of the specified protruding dimension will be added at the end of the model No. printed on the metal plate on the body.
*3 : "I" and "Y" cannot be selected together.
*4 : Switches are shipped with the product. Contact CKD if assembling before shipment is necessary.

[Example of model No.]

SSD-DG4L-32-10-T2YD-R-N

Model: Compact cylinder
Double acting double rod
anti-spatter adherence

Ⓑ Bore size : ø32 mm
Ⓒ Stroke length : 10 mm
Ⓓ Switch model No.: Proximity switch for strong magnetic field proof T2YD
· Lead wire length 1 m
Ⓔ Switch quantity : 1 on rod side
Ⓕ Option : Rod end male thread

[Stroke length table]

Stroke length (mm)		Applicable bore size						
		ø25	ø32	ø40	ø50	ø63	ø80	ø100
Standard stroke length	5	●	●	●	●	●	●	●
	10	●	●	●	●	●	●	●
	15	●	●	●	●			
	20	●	●	●	●	●	●	●
	25	●	●	●	●			
	30	●	●	●	●	●	●	●
	40	●	●	●	●	●	●	●
	50	●	●	●	●	●	●	●
Min. stroke length (mm) *1		1						
Max. stroke length (mm)		50						
Custom stroke length *2		In 1 mm increments						

*1: Less than 10 mm stroke length with AC magnetic field proof switch is not available.
*2: The total length is the same as that of the next longer standard stroke length.

How to order switch

SW - T2YD

Switch model No.
(Item Ⓓ above)

How to order mounting bracket

Bore size (mm) / Mounting bracket	ø25	ø32	ø40	ø50	ø63	ø80	ø100
Foot (LB)	SSD-LB-25	SSD-LB-32	SSD-LB-40	SSD-LB-50	SSD-LB-63	SSD-LB-80	SSD-LB-100
Foot (LB2)	SSD-LB2-25	SSD-LB2-32	SSD-LB2-40	SSD-LB2-50	SSD-LB2-63	SSD-LB2-80	SSD-LB2-100
Flange (FA)	SSD-FA-25	SSD-FA-32	SSD-FA-40	SSD-FA-50	SSD-FA-63	SSD-FA-80	SSD-FA-100
Clevis bracket (CB)	SSD-CB-25	SSD-CB-32	SSD-CB-40	SSD-CB-50	SSD-CB-63	SSD-CB-80	SSD-CB-100
Clevis bracket (CB2)	SSD-CB2-25	SSD-CB2-32	SSD-CB2-40	SSD-CB2-50	SSD-CB2-63	SSD-CB2-80	SSD-CB2-100

*1: The foot mounting bracket is provided as 2 pcs./set.

Internal structure and parts list

● SSD-DG1L/DG4L-25 (double acting/double rod/anti-spatter adherence/with switch)

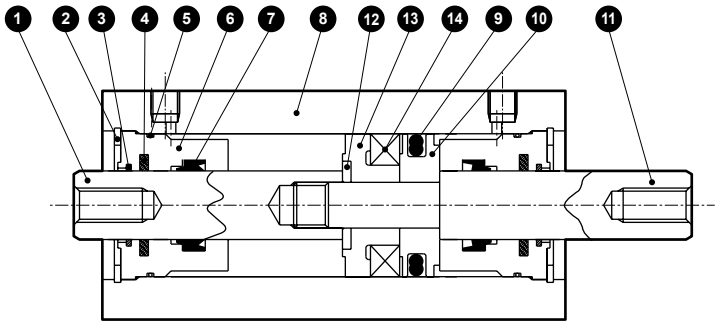

● SSD-DG1/DG4-25 (double acting/double rod/anti-spatter adherence)

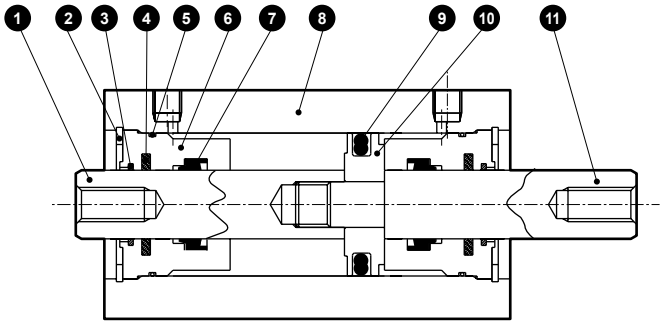

No.	Part name	Material	Remarks	No.	Part name	Material	Remarks
1	Piston rod A	Stainless steel	Industrial chrome plating	8	Tube body	Aluminum alloy	Hard alumite
2	C type snap ring for hole	Steel	Zinc phosphate	9	Piston packing	Nitrile rubber	
3	Coil scraper	Phosphor bronze		10	Piston	Aluminum alloy	Chromate
4	Lube keeping structure	Special rubber		11	Piston rod B	Stainless steel	Industrial chrome plating
5	Rod metal gasket	Nitrile rubber		12	Spacer washer	Stainless steel	
6	Rod metal	Special aluminum	Alumite	13	Spacer	Special resin	
7	Rod packing	Nitrile rubber		14	Magnet	Plastic	

Repair parts list

Part name / Bore size (mm)	Kit No.	Repair parts No.
ø25	SSD-DG1-25K	❸ ❺ ❼ ❾

Internal structure and parts list

● SSD-DG1L/DG4L-32 to 50 (double acting/double rod/anti-spatter adherence/with switch)

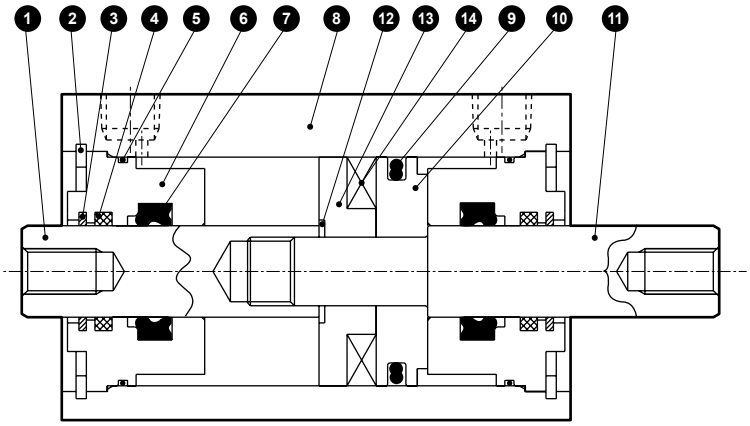

● SSD-DG1/DG4-32 to 50 (double acting/double rod/anti-spatter adherence)

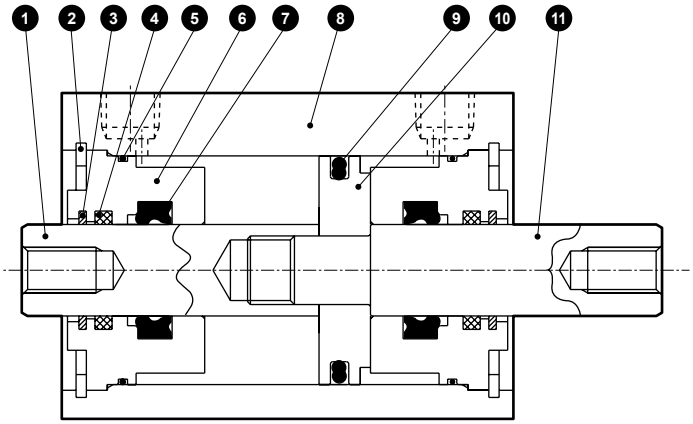

No.	Part name	Material	Remarks
1	Piston rod A	Steel	Industrial chrome plating
2	C type snap ring for hole	Steel	Zinc phosphate
3	Coil scraper	Phosphor bronze	
4	Lube keeping structure	Special rubber	G4 only
5	Rod metal gasket	Nitrile rubber	
6	Rod metal	Special aluminum	Alumite
7	Rod packing	Nitrile rubber	

No.	Part name	Material	Remarks
8	Tube body	Aluminum alloy	Hard alumite
9	Piston packing	Nitrile rubber	
10	Piston	Aluminum alloy	Chromate
11	Piston rod B	Steel	Industrial chrome plating
12	Spacer washer	Stainless steel	ø50
13	Spacer	ø32, ø40: Aluminum alloy ø50: Special resin	ø32, ø40: Chromate
14	Magnet	Plastic	

Repair parts list

Part name / Bore size (mm)	Kit No.	Repair parts No.
ø32	SSD-DG1-32K	❸ ❺ ❼ ❾
ø40	SSD-DG1-40K	
ø50	SSD-DG1-50K	

Internal structure and parts list

● SSD-DG1L/DG4L-63 to 100 (double acting/double rod/anti-spatter adherence/with switch)

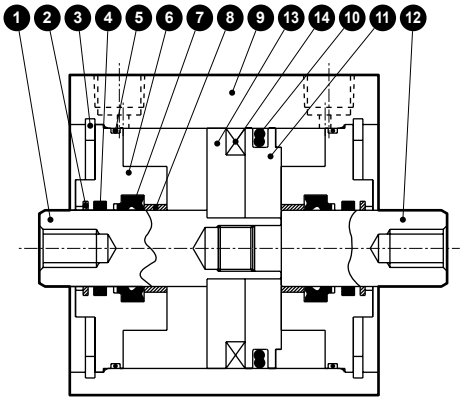

● SSD-DG1/DG4-63 to 100 (double acting/double rod/anti-spatter adherence)

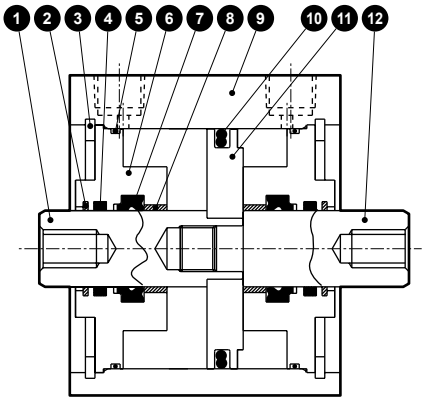

No.	Part name	Material	Remarks	No.	Part name	Material	Remarks
1	Piston rod A	Steel	Industrial chrome plating	8	Bush	Oiles drymet	
2	Coil scraper	Phosphor bronze		9	Tube body	Aluminum alloy	Hard alumite
3	C type snap ring for hole	Steel	Zinc phosphate	10	Piston packing	Nitrile rubber	Chromate
4	Lube keeping structure	Special rubber	G4 only	11	Piston	Aluminum alloy	Chromate
5	Rod metal gasket	Nitrile rubber		12	Piston rod B	Steel	Industrial chrome plating
6	Rod metal	Aluminum alloy	Chromate	13	Spacer	Aluminum alloy	Chromate
7	Rod packing	Nitrile rubber		14	Magnet	Plastic	

Repair parts list

Part name / Bore size (mm)	Kit No.	Repair parts No.
ø63	SSD-DG1-63K	❷ ❺ ❼ ❿
ø80	SSD-DG1-80K	
ø100	SSD-DG1-100K	

SCP*3
CMK2
CMA2
SCM
SCG
SCA2
SCS2
CKV2
CAV2/COVP/N2
SSD2
SSG
SSD
CAT
MDC2
MVC
SMG
MSD/MSDG
FC*
STK
SRL3
SRG3
SRM3
SRT3
MRL2
MRG2
SM-25
ShkAbs
FJ
FK
Spd Contr
Ending

Dimensions

● SSD-DG1L/DG4L-25 (with switch)

● Rod end male thread

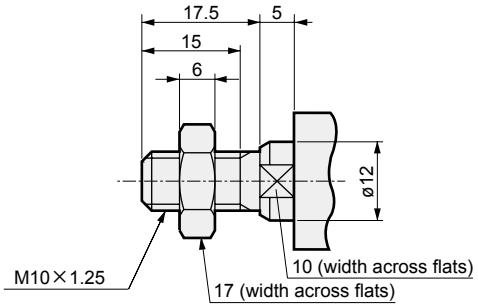

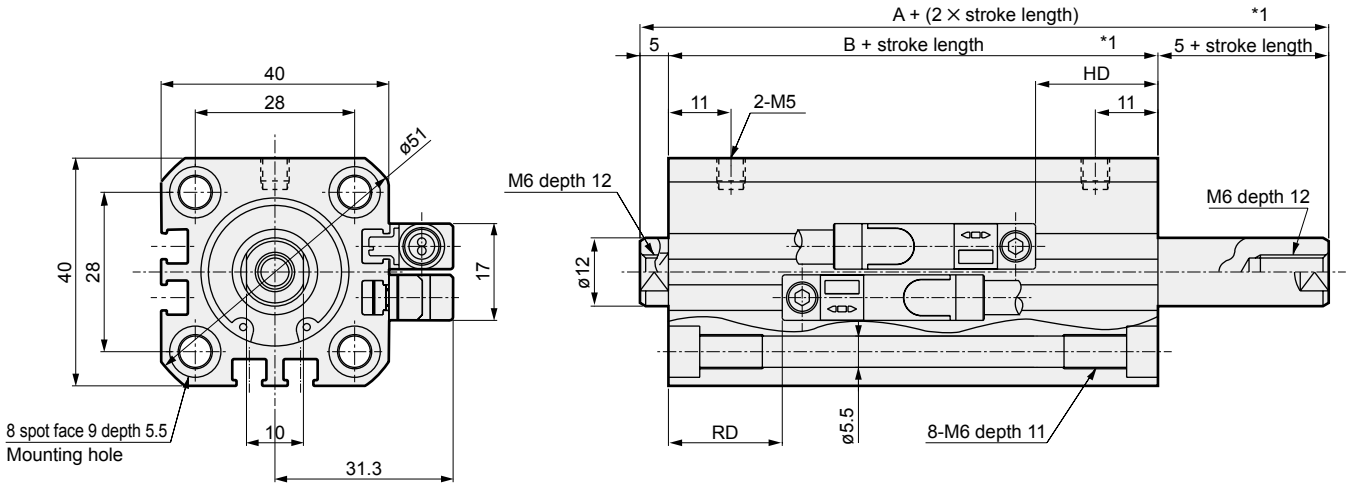

● SSD-DG1/DG4-25 (without switch)

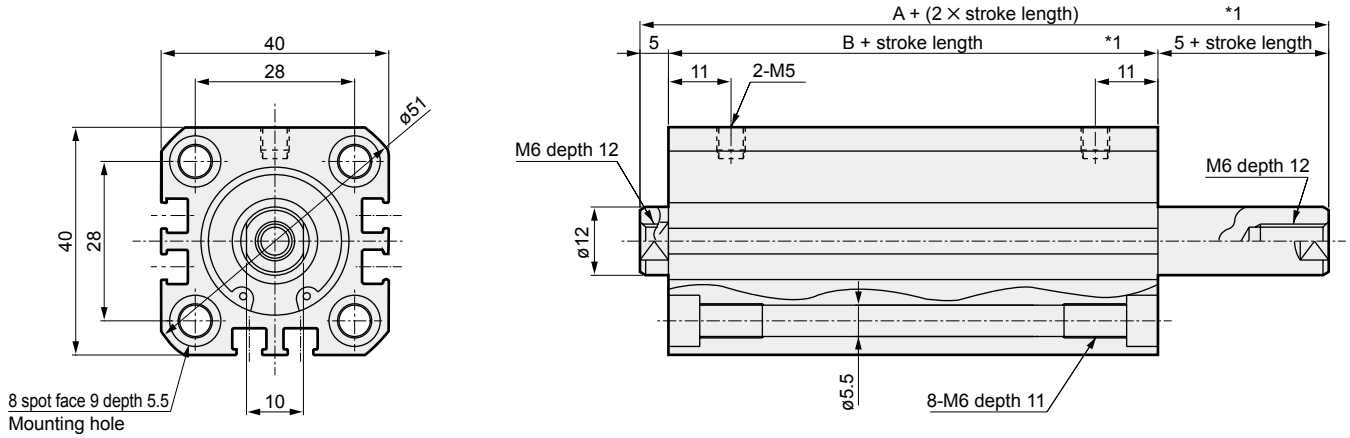

Code	Without switch		Dimensions with switch			
Bore size (mm)	A *1	B *1	A *1	B *1	RD *2	HD
ø25	61	51	71	61	20	21.5

*1 : To calculate A+ (2 x stroke length), B+ stroke length or 5+ stroke length when using a custom stroke length, apply the next longer standard stroke length (instead of the custom stroke length) to the stroke length value. Left and right projection dimensions of rod differ.
(Example) If the custom stroke length is 17 mm, apply the standard stroke length 20 mm.
*2 : RD dimensions for custom stroke length differ from these dimensions according to the setting.
*3 : For dimensions of individual accessories, refer to pages 1108 to 1115.

Dimensions

● SSD-DG1L/DG4L-32 to 100 (with switch)

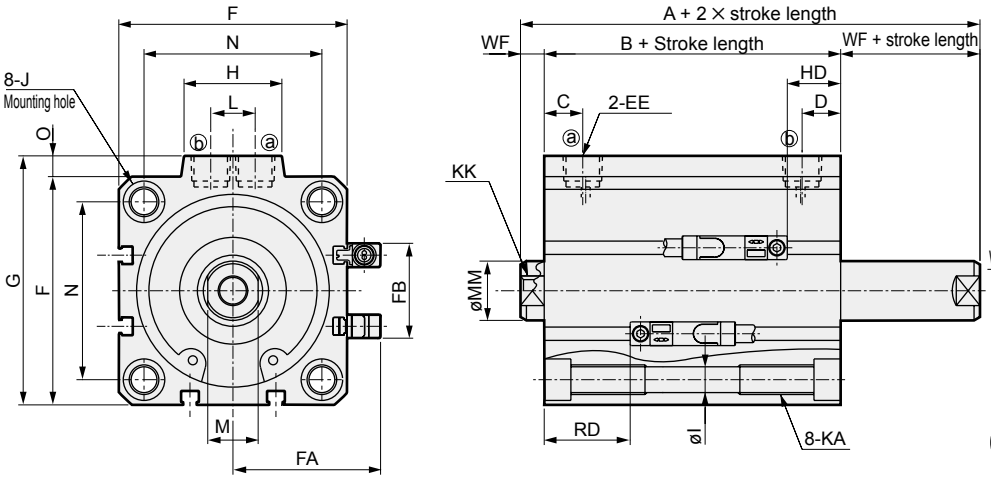

● Rod end male thread

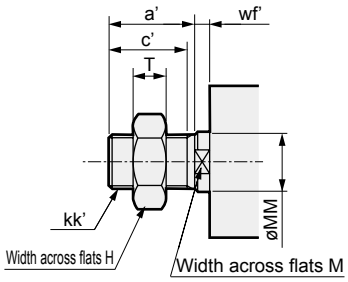

[Bore size ø100]

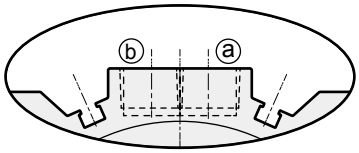

* Only for ø100, the port surface has switch grooves.

● SSD-DG1/DG4-32 to 100 (without switch)

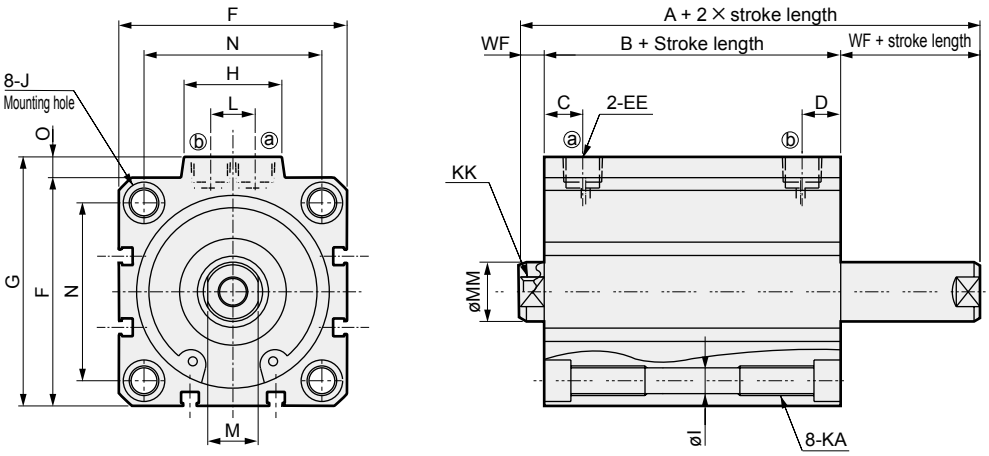

Code / Bore size (mm)	Without switch A *1	Without switch B *1	Common dimensions with switch A *1	B *1	C	D	EE	F	FA	FB	G	H	I	J	KA	KK
ø32	64.5	50.5	74.5	60.5	8	8	Rc1/8	45	33.8	20.5	49.5	24	5.5	9 spot face depth 5.5	M6 depth 11	M8 depth 13
ø40	73	59	83	69	12	12	Rc1/8	52	37.3	27.5	57	24	5.5	9 spot face depth 5.5	M6 depth 11	M8 depth 13
ø50	75	59	85	69	10.5	10.5	Rc1/4	64	43.3	28.5	71	33	6.9	11 spot face depth 6.5	M8 depth 13	M10 depth 15
ø63	77	61	87	71	13	13	Rc1/4	77	49.8	28.5	84	33	8.7	14 spot face depth 9	M10 depth 25	M10 depth 15
ø80	88.5	68.5	98.5	78.5	16	16	Rc3/8	98	60.3	28.5	104	38	10.5	17 spot face depth 11	M12 depth 28	M16 depth 21
ø100	102	78	112	88	23	23	Rc3/8	117	69.8	28.5	123.5	38	10.5	17.5 spot face depth 11	M12 depth 28	M20 depth 27

Code / Bore size (mm)	Common dimensions with switch L	M	MM	N	O	WF	With T2YD switch RD *2	HD
ø32	10	14	16	34	4.5	7	20.5	22
ø40	10	14	16	40	5	7	23.5	27.5
ø50	15	17	20	50	7	8	23.5	27.5
ø63	15	17	20	60	7	8	24	28.5
ø80	15	22	25	77	6	10	26.5	35
ø100	15	27	30	94	6.5	12	30.5	40.5

*1 : To calculate A+ (2 x stroke length), B+ stroke length or WF+ stroke length when using a custom stroke length, apply the next longer standard stroke length (instead of the custom stroke length) to the stroke length value. Left and right projection dimensions of rod differ.
(Example) If the custom stroke length is 17 mm, apply the standard stroke length 20 mm.

*2 : RD dimensions for custom stroke length differ from these dimensions according to the setting.

● Dimensions of rod end male thread part

Code / Bore size (mm)	a'	C'	H	kk'	M	MM	T	wf'
ø32	23.5	20.5	22	M14×1.5	14	16	8	5
ø40	23.5	20.5	22	M14×1.5	14	16	8	5
ø50	28.5	26	27	M18×1.5	17	20	11	5
ø63	28.5	26	27	M18×1.5	17	20	11	5
ø80	35.5	32.5	32	M22×1.5	22	25	13	8
ø100	35.5	32.5	41	M26×1.5	27	30	16	8

* For dimensions of individual accessories, refer to pages 1108 to 1115.

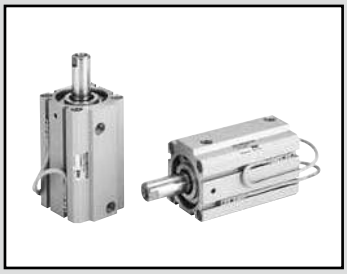

Compact cylinder double acting/single rod/environment-resistant scraper

SSD-G5 Series

● Bore size: ø20/ø25/ø32/ø40/ø50/ø63/ø80/ø100

JIS symbol

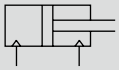

RoHS

Specifications

* Made-to-order product.

Item		SSD-G5 SSD-G5L (with switch)							
Bore size	mm	ø20	ø25	ø32	ø40	ø50	ø63	ø80	ø100
Actuation		Double acting							
Working fluid		Compressed air							
Max. working pressure	MPa	1.0 (≈150 psi, 10 bar)							
Min. working pressure	MPa	0.2 (≈29 psi, 2 bar)					0.15 (≈22 psi, 1.5 bar)		
Proof pressure	MPa	1.6 (≈230 psi, 16 bar)							
Ambient temperature	°C	-10 (14°F) to 60 (140°F) (no freezing)							
Port size		M5		Rc1/8		Rc1/4		Rc3/8	
Stroke tolerance	mm	+1.0 0							
Working piston speed	mm/s	50 to 500					50 to 300		
Cushion		None							
Lubrication		Not required (use turbine oil class 1 ISO VG32 if necessary for lubrication)							
Allowable absorbed energy	J	0.016	0.021	0.025	0.092	0.1	0.12	0.27	0.56

Stroke length

Bore size (mm)	Standard stroke length (mm)	Max. stroke length (mm)	Min. stroke length (mm)
ø20	5, 10, 15, 20, 25, 30, 40, 50	50 *1	1
ø25			
ø32			
ø40			
ø50			
ø63	5, 10, 20, 30, 40, 50	50 *1	
ø80			
ø100			

*1: For ø12 to ø100, if the standard stroke is exceeded, the high load is used.
Refer to page 1280 for specifications.
*2: For the type with switch, refer to the table below of installed switch numbers and minimum stroke length.
*3: The custom stroke length is available in 1 mm increments. The total length when using a custom stroke length is the same as that when using the next longer standard stroke length.
*4: Refer to pages 1320 and 1321 for the min. stroke length with mounting brackets LB and LB2.

Number of installed switches and min. stroke length (mm)

Switch quantity	1	2	3	4
Switch model No. / Bore size (mm)	T*	T*	T*	T*
ø20	5	5	-	-
ø25	5	5	35	50
ø32	5	5	35	50
ø40	5	5	35	50
ø50	5	5	35	50
ø63	5	5	35	50
ø80	5	5	35	50
ø100	5	5	35	50

Note: Less than 10 mm with the 2-color display, off-delay, AC magnetic field proof, T1* or T8* switch is not available.

Switch specifications

●1-color/2-color display/for AC magnetic field

Item	Proximity 2-wire	Proximity 2-wire			Proximity 3-wire				Reed 2-wire							Proximity 2-wire
	T1H/ T1V	T2H/T2V/ T2JH/T2JV	T2YH/ T2YV	T2WH/ T2WV	T3H/ T3V	T3PH/ T3PV	T3YH/ T3YV	T3WH/ T3WV	T0H/T0V		T5H/T5V		T8H/T8V			T2YD (*4) T2YDT
Applications	For programming controller, relay, compact solenoid valve	Dedicated for programmable controller			For programmable controller, relay				For programmable controller, relay		For programmable controller, relay (no lamp), serial		For programmable controller, relay			Dedicated for programmable controller
Output method	-				NPN output	PNP output	NPN output	NPN output	-							
Pwr. supp. V.	-				10 to 28 VDC				-							
Load voltage	85 to 265 VAC	10 to 30 VDC		24 VDC ±10%	30 VDC or less				12/24 VDC	100/110 VAC	5/12/24 VDC	100/110 VAC	12/24 VDC	110 VAC	220 VAC	24 VDC ±10%
Load current	5 to 100 mA	5 to 20 mA (*3)			100 mA or less		50 mA or less		5 to 50 mA	7 to 20 mA	50 mA or less	20 mA or less	5 to 50 mA	7 to 20 mA	7 to 10 mA	5 to 20 mA
Indicator lamp	LED (Lit when ON)	LED (Lit when ON)	Red/green LED (Lit when ON)	Red/green LED (Lit when ON)	LED (Lit when ON)	Yellow LED (Lit when ON)	Red/green LED (Lit when ON)	Red/green LED (Lit when ON)	LED (Lit when ON)		Without indicator lamp		LED (Lit when ON)			Red/green LED (Lit when ON)
Leakage current	≤ 1 mA at 100 VAC, ≤ 2 mA at 200 VAC	1 mA or less			10 μA or less				0 mA							1 mA or less
Weight g	1 m:33 3 m:87 5 m:142	1 m:18 3 m:49 5 m:80	1 m:33 3 m:87 5 m:142	1 m:18 3 m:49 5 m:80	1 m:18 3 m:49 5 m:80		1 m:33 3 m:87 5 m:142	1 m:18 3 m:49 5 m:80	1 m:18 3 m:49 5 m:80				1 m:33 3 m:87 5 m:142			1 m:61 3 m:166 5 m:272

*1 : Refer to Ending Page 1 for detailed switch specifications and dimensions.
*2 : Switches other than the above models, such as switches with connectors, are also available. Refer to Ending Page 1.
*3 : The max. load current is 20 mA at 25°C. The current is lower than 20 mA if the operating ambient temperature around the switch is higher than 25°C. (5 to 10 mA at 60°C)
*4 : Switch for AC magnetic field (T2YD/T2YDT) cannot be used in DC magnetic field.

Cylinder weight table (the weight of the switches is when there are 2 cylinder switches.)

(Unit: g)

Stroke length (mm)	5		10		15		20		25		30		40		50	
Bore size (mm)	No switch	Switch	No switch	Switch	No switch	Switch	No switch	Switch	No switch	Switch	No switch	Switch	No switch	Switch	No switch	Switch
ø20	95	150	107	182	120	195	133	208	145	220	158	233	183	258	208	283
ø25	131	222	146	237	162	253	178	269	194	285	209	300	241	332	272	363
ø32	185	299	207	321	229	343	251	365	272	386	294	408	338	452	381	495
ø40	269	412	296	439	322	465	349	492	376	519	402	545	455	598	508	651
ø50	434	628	476	670	518	712	560	754	602	796	645	839	729	923	813	1007
ø63	648	927	703	982	-	-	813	1092	-	-	923	1202	1074	1313	1144	1423
ø80	1153	1566	1240	1653	-	-	1413	1826	-	-	1586	1990	1760	2173	1933	2346
ø100	1765	2332	1879	2446	-	-	2106	2673	-	-	2334	2901	2561	3128	2789	3356

Theoretical thrust table

(Unit: N)

Bore size (mm)	Operating direction	Working pressure MPa									
		0.15	0.2	0.3	0.4	0.5	0.6	0.7	0.8	0.9	1.0
ø20	Push	-	62.8	94.2	1.26×10^2	1.57×10^2	1.88×10^2	2.20×10^2	2.51×10^2	2.83×10^2	3.14×10^2
	Pull	-	47.1	70.7	94.2	1.18×10^2	1.41×10^2	1.65×10^2	1.88×10^2	2.12×10^2	2.36×10^2
ø25	Push	-	98.2	1.47×10^2	1.96×10^2	2.45×10^2	2.95×10^2	3.44×10^2	3.93×10^2	4.42×10^2	4.91×10^2
	Pull	-	75.6	1.13×10^2	1.51×10^2	1.89×10^2	2.27×10^2	2.64×10^2	3.02×10^2	3.40×10^2	3.78×10^2
ø32	Push	-	1.61×10^2	2.41×10^2	3.22×10^2	4.02×10^2	4.83×10^2	5.63×10^2	6.43×10^2	7.24×10^2	8.04×10^2
	Pull	-	1.21×10^2	1.81×10^2	2.41×10^2	3.02×10^2	3.62×10^2	4.22×10^2	4.83×10^2	5.43×10^2	6.03×10^2
ø40	Push	-	2.51×10^2	3.77×10^2	5.03×10^2	6.28×10^2	7.54×10^2	8.80×10^2	1.01×10^3	1.13×10^3	1.26×10^3
	Pull	-	2.11×10^2	3.17×10^2	4.22×10^2	5.28×10^2	6.33×10^2	7.39×10^2	8.44×10^2	9.50×10^2	1.06×10^3
ø50	Push	-	3.93×10^2	5.89×10^2	7.85×10^2	9.82×10^2	1.18×10^3	1.37×10^3	1.57×10^3	1.77×10^3	1.96×10^3
	Pull	-	3.30×10^2	4.95×10^2	6.60×10^2	8.25×10^2	9.90×10^2	1.15×10^3	1.32×10^3	1.48×10^3	1.65×10^3
ø63	Push	4.68×10^2	6.23×10^2	9.35×10^2	1.25×10^3	1.56×10^3	1.87×10^3	2.18×10^3	2.49×10^3	2.81×10^3	3.12×10^3
	Pull	4.20×10^2	5.61×10^2	8.41×10^2	1.12×10^3	1.40×10^3	1.68×10^3	1.96×10^3	2.24×10^3	2.52×10^3	2.80×10^3
ø80	Push	7.54×10^2	1.01×10^3	1.51×10^3	2.01×10^3	2.51×10^3	3.02×10^3	3.52×10^3	4.02×10^3	4.52×10^3	5.03×10^3
	Pull	6.80×10^2	9.07×10^2	1.36×10^3	1.81×10^3	2.27×10^3	2.72×10^3	3.17×10^3	3.63×10^3	4.08×10^3	4.54×10^3
ø100	Push	1.18×10^3	1.57×10^3	2.36×10^3	3.14×10^3	3.93×10^3	4.71×10^3	5.50×10^3	6.28×10^3	7.07×10^3	7.85×10^3
	Pull	1.07×10^3	1.43×10^3	2.14×10^3	2.86×10^3	3.57×10^3	4.29×10^3	5.00×10^3	5.72×10^3	6.43×10^3	7.15×10^3

How to order

Without switch (without magnet for switch)

SSD-G5 - 20 ◯ - 5 ———— N - LB - I

With switch (built-in magnet for switch)

SSD-G5L - 20 ◯ - 5 - T0H - R - N - LB - I

Ⓐ Model No.
Ⓑ Bore size
Ⓒ Port thread
Ⓓ Stroke length
Ⓔ Switch model No. *1 *4
Ⓕ Switch quantity
Ⓖ Option
Ⓗ Mounting bracket *2
Ⓘ Accessory *3

Code	Description
Ⓐ Model No.	
SSD-G5	Double acting/single rod/environment-resistant scraper
SSD-G5L	Double acting/single rod/environment-resistant scraper/with switch
Ⓑ Bore size (mm)	
20	ø20
25	ø25
32	ø32
40	ø40
50	ø50
63	ø63
80	ø80
100	ø100
Ⓒ Port thread	
Blank	Rc thread/M5 thread
NN	NPT thread (ø32 and over) (made-to-order product)
GN	G thread (ø32 and over) (made-to-order product)
Ⓓ Stroke length (mm)	
Refer to the stroke length table on the following page.	

Ⓔ Switch model No.

Axial lead wire	Radial lead wire	Contact	Voltage AC	Voltage DC	Display	Lead wire
TOH*	T0V*	Reed	●	●	1-color display	2-wire
T5H*	T5V*	Reed	●	●	Without indicator lamp	2-wire
T8H*	T8V*	Reed	●	●	1-color display	2-wire
T1H*	T1V*	Prox.	●		1-color display	2-wire
T2H*	T2V*	Prox.		●	1-color display	2-wire
T3H*	T3V*	Prox.		●	1-color display	3-wire
T3PH*	T3PV*	Prox.		●	1-color display (PNP output)	3-wire
T2WH*	T2WV*	Prox.		●	2-color display	2-wire
T2YH*	T2YV*	Prox.		●	2-color display	2-wire
T3WH*	T3WV*	Prox.		●	2-color display	3-wire
T3YH*	T3YV*	Prox.		●	2-color display	3-wire
T2JH*	T2JV*	Prox.		●	1-color display off-delay	2-wire
T2YD*	-	Prox.		●	2-color display for AC magnetic field	2-wire
T2YDT*	-	Prox.		●	2-color display for AC magnetic field	2-wire

* Lead wire length	
Blank	1 m (standard)
3	3 m (option)
5	5 m (option)
Ⓕ Switch quantity	
R	1 on rod side
H	1 on head side
D	2
Ⓖ Option	
Blank	Rod end female thread
N	Rod end male thread
Ⓗ Mounting bracket	
LB	Axial foot
LB2	Axial foot (compact)
CB	Clevis bracket (pin and snap ring included)
CB2	Clevis bracket (compact) (pin and snap ring included)
FA	Rod side flange
FB	Head side flange
Ⓘ Accessory (available when rod end male thread "N" is selected)	
I	Rod eye
I2	Rod eye (compact)
Y	Rod clevis (pin and snap ring included)
Y2	Rod clevis (compact) (pin and snap ring included)

Precautions for model No. selection

1 : T8 switch cannot be installed on ø20 to ø32.
*2 : The mounting bracket is included at shipment.
WF and wf dimensions of cylinders for "LB2" and "FA" are set 10 mm longer than those of the standard.
Contact CKD for the cylinder model No. when individually ordering cylinders, LB2 brackets and FA brackets.
*3 : "I" and "Y" cannot be selected together.
*4 : Switches are shipped with the product.
Contact CKD if assembling before shipment is necessary.

[Example of model No.]

SSD-G5L-32-5-T0H-R-N-LB-I

Model: Compact cylinder double acting single rod/environment-resistant scraper

Ⓑ Bore size : ø32 mm
Ⓒ Port thread : Type of Rc thread
Ⓓ Stroke length : 5 mm
Ⓔ Switch model No. : Reed switch T0H
Lead wire length 1 m
Ⓕ Switch quantity : 1 on rod side
Ⓖ Option : Rod end male thread
Ⓗ Mounting bracket : Axial foot
Ⓘ Accessory : Rod eye

[Stroke length table]

Stroke length (mm)		Applicable bore size							
		ø20	ø25	ø32	ø40	ø50	ø63	ø80	ø100
Standard stroke length	5	●	●	●	●	●	●	●	●
	10	●	●	●	●	●	●	●	●
	15	●	●	●	●	●			
	20	●	●	●	●	●	●	●	●
	25	●	●	●	●	●			
	30	●	●	●	●	●	●	●	●
	40	●	●	●	●	●	●	●	●
	50	●	●	●	●	●	●	●	●
	60								
	70								
	80								
	90								
	100								
Min. stroke length (mm) *1		1							
Max. stroke length (mm)		50							
Custom stroke length *2		In 1 mm increments							

If the standard stroke is exceeded, the high load (K) is used. Refer to page 1280 for specifications, and pages 1286 and 1287 for dimensions.

1: Less than 5 mm for 1-color display switch and less than 10 mm for the 2-color display, off-delay, AC magnetic field proof, T1 or T8* switch are not available.
Refer to page 1272 for the number of installed switches and the min. stroke length.
*2: The total length when using a custom stroke length is the same as that when using the next longer standard stroke length.
*3: Refer to pages 1320 and 1321 for the min. stroke length with mounting brackets LB and LB2.

How to order switch

SW - T0H

Switch model No.
(Item Ⓔ on page 1274)

How to order mounting bracket

Bore size (mm) / Mounting bracket	ø20	ø25	ø32	ø40	ø50	ø63	ø80	ø100
Foot (LB)	SSD-LB-20	SSD-LB-25	SSD-LB-32	SSD-LB-40	SSD-LB-50	SSD-LB-63	SSD-LB-80	SSD-LB-100
Foot (LB2)	SSD-LB2-20	SSD-LB2-25	SSD-LB2-32	SSD-LB2-40	SSD-LB2-50	SSD-LB2-63	SSD-LB2-80	SSD-LB2-100
Flange (FA/FB)	SSD-FA-20	SSD-FA-25	SSD-FA-32	SSD-FA-40	SSD-FA-50	SSD-FA-63	SSD-FA-80	SSD-FA-100
Clevis bracket (CB)	SSD-CB-20	SSD-CB-25	SSD-CB-32	SSD-CB-40	SSD-CB-50	SSD-CB-63	SSD-CB-80	SSD-CB-100
Clevis bracket (CB2)	SSD-CB2-20	SSD-CB2-25	SSD-CB2-32	SSD-CB2-40	SSD-CB2-50	SSD-CB2-63	SSD-CB2-80	SSD-CB2-100

*1: The foot mounting bracket is provided as 2 pcs./set.

Internal structure and parts list (ø20 to ø50)

● SSD-G5L-20/25
(double acting/environment-resistant scraper/with switch)

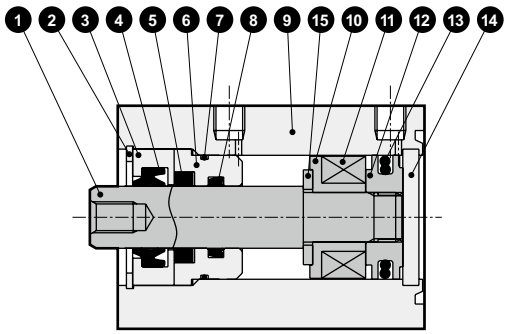

● SSD-G5L-32 to 50
(double acting/environment-resistant scraper/with switch)

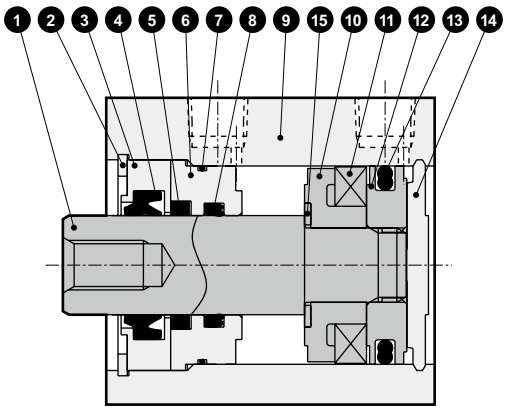

● SSD-G5-20/25
(double acting/environment-resistant scraper)

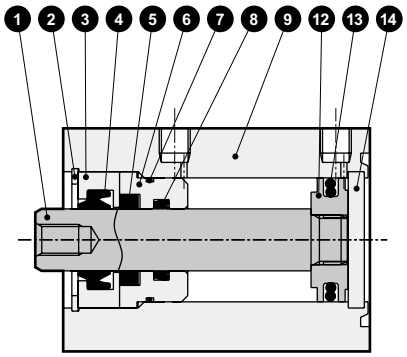

● SSD-G5-32 to 50
(double acting/environment-resistant scraper)

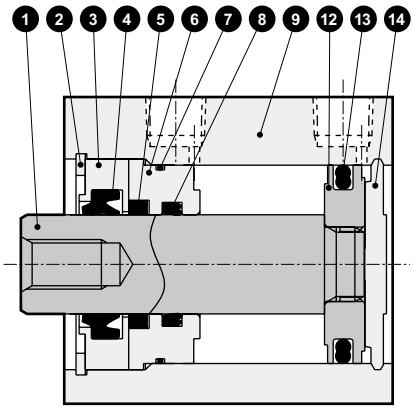

Main parts list

No.	Part name	Material	Remarks	No.	Part name	Material	Remarks
1	Piston rod	ø20/ø25: Stainless steel	Industrial chrome plating	9	Body	Aluminum alloy	Hard alumite
		ø32 to ø50: Steel		10	Spacer	Special resin	
2	C type snap ring	Steel	Zinc phosphate	11	Magnet	Plastic	
3	Rod metal 1	Special aluminum	Chromate	12	Piston	Aluminum alloy	Chromate
4	Scraper	Nitrile rubber		13	Piston packing	Nitrile rubber	
5	Lube keeping structure	Special rubber		14	Cover	ø20/ø25: Stainless steel	ø32 to ø50: Alumite
6	Rod metal 2	Special aluminum	Alumite			ø32 to ø50: Aluminum alloy	
7	Rod metal gasket	Nitrile rubber		15	Spacer washer	Stainless steel	
8	Rod packing	Nitrile rubber					

Repair parts list

Part name / Bore size (mm)	Kit No.	Repair parts No.
ø20	SSD-G5-20K	4 5 7 8 13
ø25	SSD-G5-25K	
ø32	SSD-G5-32K	
ø40	SSD-G5-40K	
ø50	SSD-G5-50K	

Internal structure and parts list (ø63 to ø100)

● SSD-G5L-63 to 100 (double acting/environment-resistant scraper/with switch)

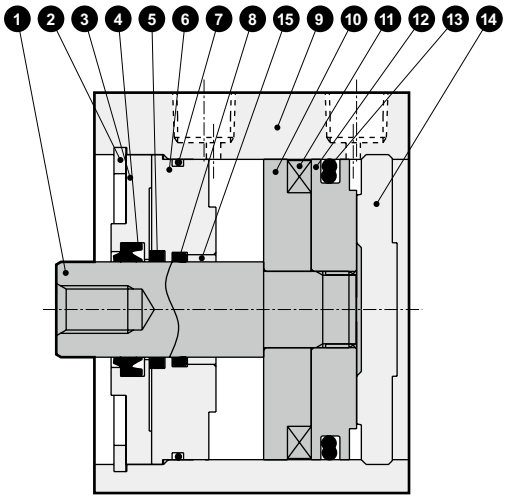

● SSD-G5-63 to 100 (double acting/environment-resistant scraper)

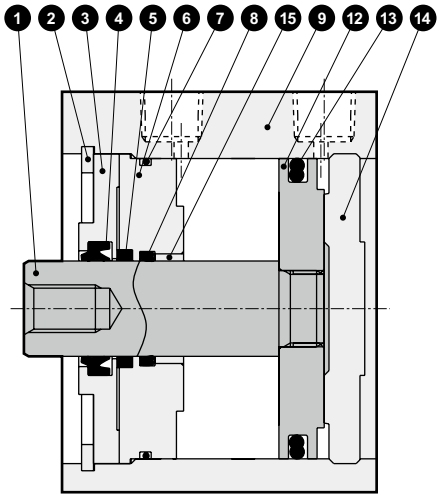

Main parts list

No.	Part name	Material	Remarks	No.	Part name	Material	Remarks
1	Piston rod	Steel	Industrial chrome plating	9	Body	Aluminum alloy	Hard alumite
2	C type snap ring	Steel	Zinc phosphate	10	Spacer	Aluminum alloy	Chromate
3	Rod metal 1	Aluminum alloy	Chromate	11	Magnet	Plastic	
4	Scraper	Nitrile rubber		12	Piston	Aluminum alloy	Chromate
5	Lube keeping structure	Special rubber		13	Piston packing	Nitrile rubber	
6	Rod metal 2	Aluminum alloy	Chromate	14	Cover	Aluminum alloy	Alumite
7	Rod metal gasket	Nitrile rubber		15	Bush	Dry bearing	
8	Rod packing	Nitrile rubber					

Repair parts list

Part name / Bore size (mm)	Kit No.	Repair parts No.
ø63	SSD-G5-63K	4 5 7 8 13
ø80	SSD-G5-80K	
ø100	SSD-G5-100K	

Dimensions (ø20, ø25)

● SSD-G5L-20, 25 (with switch)

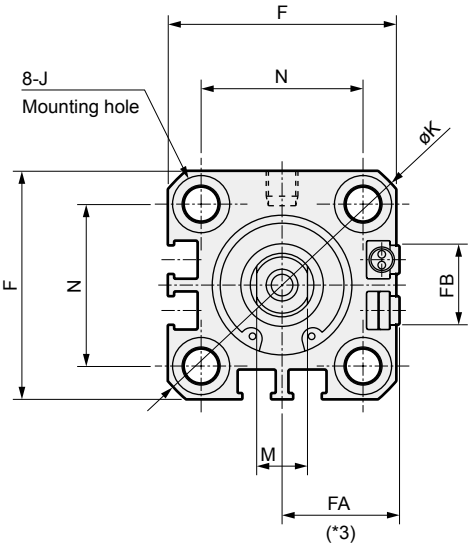

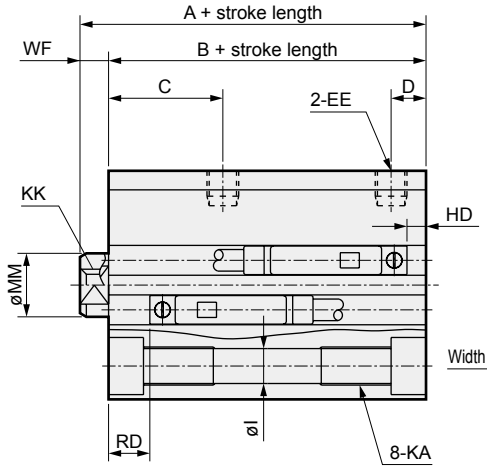

● Rod end male thread

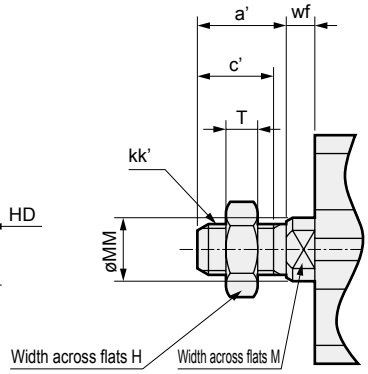

Code / Bore size	Without switch A *1	Without switch B *1	Common dimensions with switch A *1	B *1	C	D	EE	F	FA *3	FB
ø20	34	29.5	44	39.5	18	5.5	M5	36	18.5(22)	12.5
ø25	37.5	32.5	47.5	42.5	21	6	M5	40	20.5(24)	13.5

Code / Bore size	Common dimensions with switch I	J	K	KA	KK	M	MM	N	WF
ø20	5.5	9 spot face depth 5.5	47	M6 depth 11	M5 depth 7	8	10	25.5	4.5
ø25	5.5	9 spot face depth 5.5	51	M6 depth 11	M6 depth 11	10	12	28	5

Switch dimensions / Bore size	Reed/proximity 1-color HD	Reed/proximity 1-color RD	Proximity 2-color HD	Proximity 2-color RD
ø20	3	16.5	1.5	15
ø25	3	19.5	1.5	18

*1 : To calculate A+ stroke length or B+ stroke length when using custom stroke length, apply the next longer standard stroke length (instead of the custom stroke length) to the stroke length value.
(Example) If the custom stroke length is 7 mm, apply the standard stroke length of 10 mm.
*2 : HD and RD dimensions for 5 mm stroke length differ from these dimensions according to the setting.
*3 : Dimensions in ( ) of FA are for the radial lead wire.
*4 : Refer to pages 1320 to 1325 for dimensions including the accessories and pages 1108 to 1115 for dimensions of individual accessories.

Rod end male thread

Code / Bore size	a'	c'	H	kk'	M	MM	T	wf
ø20	14	12	13	M8	8	10	5	4.5
ø25	17.5	15	17	M10×1.25	10	12	6	5

Dimensions (ø32 to ø100)

● SSD-G5L-32 to 100 (with switch)

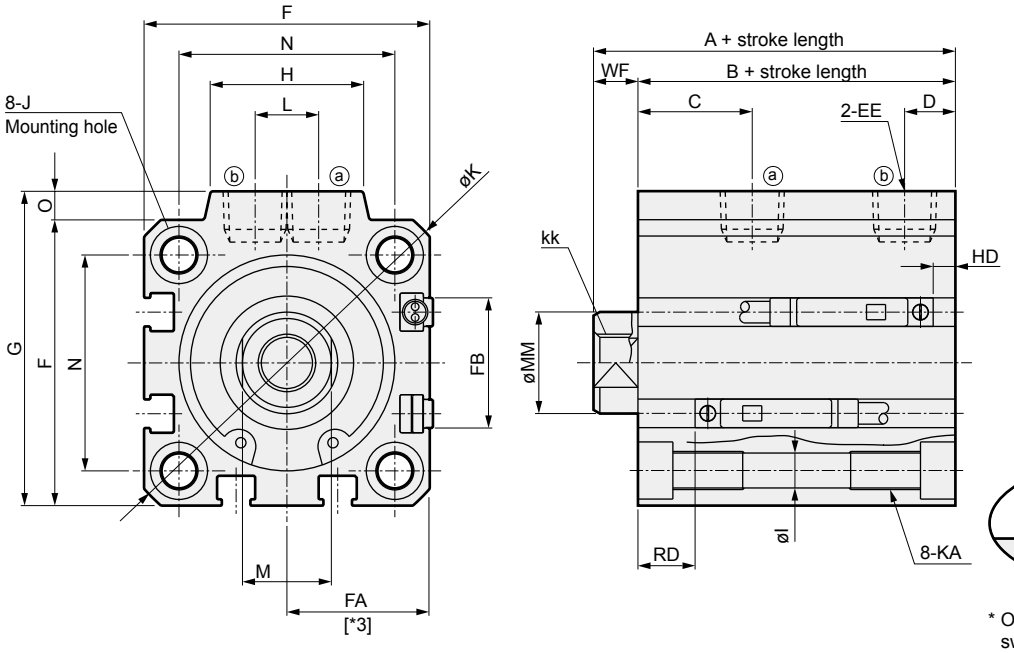

● Rod end male thread

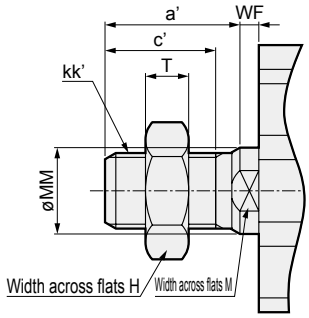

[Bore size ø100]

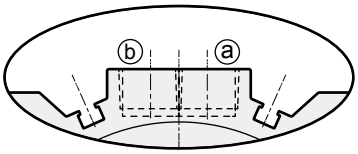

* Only for ø100, the port surface has switch grooves.

Code / Bore size	Without switch A *1	Without switch B *1	Common dimensions with switch A *1	B *1	C	D	EE	F	FA *3	FB	G	H
ø32	40	33	50	43	18	8	Rc1/8	45	23(26.5)	20.5	49.5	24
ø40	46.5	39.5	56.5	49.5	22	8.5	Rc1/8	52	26.5(30)	27.5	57	24
ø50	48.5	40.5	58.5	50.5	20.5	10.5	Rc1/4	64	32.5(36)	28.5	71	33
ø63	54	46	64	56	23	11	Rc1/4	77	39(42.5)	28.5	84	33
ø80	63.5	53.5	73.5	63.5	26	13	Rc3/8	98	49.5(53)	28.5	104	38
ø100	75	63	85	73	33	15	Rc3/8	117	59(62.5)	28.5	123.5	38

Code / Bore size	Common dimensions with switch I	J	K	KA	KK	L	M	MM	N	O	WF
ø32	5.5	9 spot face depth 5.5	60	M6 depth 11	M8 depth 13	10	14	16	34	4.5	7
ø40	5.5	9 spot face depth 5.5	69	M6 depth 11	M8 depth 13	10	14	16	40	5	7
ø50	6.9	11 spot face depth 6.5	86	M8 depth 13	M10 depth 15	15	17	20	50	7	8
ø63	8.7	14 spot face depth 9	103	M10 depth 25	M10 depth 15	15	17	20	60	7	8
ø80	10.5	17.5 spot face depth 11	132	M12 depth 28	M16 depth 21	15	22	25	77	6	10
ø100	10.5	17.5 spot face depth 11	156	M12 depth 29	M20 depth 27	15	27	30	94	6.5	12

Switch dimensions / Bore size	Reed/proximity 1-color HD	Reed/proximity 1-color RD	Proximity 2-color HD	Proximity 2-color RD	T8H/V switch HD	T8H/V switch RD
ø32	3.5	19	2	17.5	-	-
ø40	7	22	5.5	20.5	1	16
ø50	7.5	22.5	6	21	1.5	16.5
ø63	12.5	23	11	21.5	6.5	17
ø80	17.5	25.5	16	24	11.5	19.5
ø100	22	30.5	21.5	28	7	23.5

*1 : To calculate A+ stroke length or B+ stroke length when using custom stroke length, apply the next longer standard stroke length (instead of the custom stroke length) to the stroke length value.
(Example) If the custom stroke length is 7 mm, apply the standard stroke length of 10 mm.
*2 : HD and RD dimensions for 5 mm stroke length differ from these dimensions according to the setting.
*3 : Dimensions in ( ) of FA are for the radial lead wire.

Rod end male thread

Code / Bore size	a'	c'	H	kk'	M	MM	T	wf
ø32	23.5	20.5	22	M14×1.5	14	16	8	5
ø40	23.5	20.5	22	M14×1.5	14	16	8	5
ø50	28.5	26	27	M18×1.5	17	20	11	5
ø63	28.5	26	27	M18×1.5	17	20	11	5
ø80	35.5	32.5	32	M22×1.5	22	25	13	8
ø100	35.5	32.5	41	M26×1.5	27	30	16	8

* Refer to pages 1320 to 1325 for dimensions including the accessories and pages 1108 to 1115 for dimensions of individual accessories.

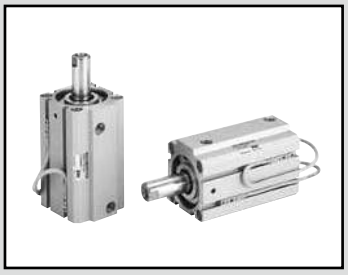

Compact cylinder, double acting/single rod/high load/environment-resistant scraper

SSD-KG5 Series

● Bore size: ø20/ø25/ø32/ø40/ø50/ø63/ø80/ø100

JIS symbol

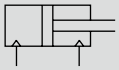

RoHS

Specifications

Item		SSD-KG5 SSD-KG5L (with switch)							
Bore size	mm	ø20	ø25	ø32	ø40	ø50	ø63	ø80	ø100
Actuation		Double acting							
Working fluid		Compressed air							
Max. working pressure	MPa	1.0 (≈150 psi, 10 bar)							
Min. working pressure	MPa	0.2 (≈29 psi, 2 bar)					0.15 (≈22 psi, 2 bar)		
Proof pressure	MPa	1.6 (≈230 psi, 16 bar)							
Ambient temperature	°C	-10 (14°F) to 60 (140°F) (no freezing)							
Port size		M5		Rc1/8		Rc1/4		Rc3/8	
Stroke tolerance	mm	+2.0 0							
Working piston speed	mm/s	50 to 500					50 to 300		
Cushion		Rubber cushion							
Lubrication		Not required (use turbine oil class 1 ISO VG32 if necessary for lubrication)							
Allowable absorbed energy	J	0.16	0.16	0.40	0.63	0.98	1.56	2.51	3.92

Stroke length

Bore size (mm)	Standard stroke length (mm)	Max. stroke length (mm)	Min. stroke length (mm)
ø20	5, 10, 15, 20, 25, 30, 40, 50	200 *2	1
ø25	10, 15, 20, 25, 30, 40, 50, 60, 70, 80, 90, 100	300	
ø32			
ø40			
ø50			
ø63	10, 20, 30, 40, 50, 60, 70, 80, 90, 100		
ø80			
ø100		*2	

*1 : The custom stroke length is available in 1mm increments. However, the total length is the same as that of the next longer standard stroke length.
*2 : Stroke length over standard to maximum is available in increments of 10.
*3 : From 101 to 200 for ø20, 151 to 300 for ø25 to ø50, or 201 to 300 for ø63 to ø100, internal structure and total length are different in some products.
*4 : For the type with switch, refer to the table below of installed switch numbers and minimum stroke length.

Number of installed switches and min. stroke length (mm)

Switch quantity	1	2	3	4	5
Switch model No. / Bore size (mm)	T*	T*	T*	T*	T*
ø20	5	5	35	50	65
ø25	5	5	35	50	65
ø32	5	5	35	50	65
ø40	5	5	35	50	65
ø50	5	5	35	50	65
ø63	5	5	35	50	65
ø80	5	5	35	50	65
ø100	5	5	35	50	65

Note: Less than 10 mm with the 2-color display, off-delay, AC magnetic field proof, T1* or T8* switch is not available.

Switch specifications

●1-color/2-color display/for AC magnetic field

Item	Proximity 2-wire	Proximity 2-wire			Proximity 3-wire				Reed 2-wire							Proximity 2-wire
	T1H/ T1V	T2H/T2V/ T2JH/T2JV	T2YH/ T2YV	T2WH/ T2WV	T3H/ T3V	T3PH/ T3PV	T3YH/ T3YV	T3WH/ T3WV	T0H/T0V		T5H/T5V		T8H/T8V			T2YD (*4) T2YDT
Applications	For programmable controller, relay, compact solenoid valve	Dedicated for programmable controller			For programmable controller, relay				For programmable controller, relay		For programmable controller, relay (no lamp), serial		For programmable controller, relay			Dedicated for programmable controller
Output method	-				NPN output	PNP output	NPN output	NPN output	-							
Pwr. supp. V.	-				10 to 28 VDC				-							
Load voltage	85 to 265 VAC	10 to 30 VDC		24 VDC ±10%	30 VDC or less				12/24 VDC	100/110 VAC	5/12/24 VDC	100/110 VAC	12/24 VDC	110 VAC	220 VAC	24 VDC ±10%
Load current	5 to 100 mA	5 to 20 mA (*3)			100 mA or less		50 mA or less		5 to 50 mA	7 to 20 mA	50 mA or less	20 mA or less	5 to 50 mA	7 to 20 mA	7 to 10 mA	5 to 20 mA
Indicator lamp	LED (Lit when ON)	LED (Lit when ON)	Red/green LED (Lit when ON)	Red/green LED (Lit when ON)	LED (Lit when ON)	Yellow LED (Lit when ON)	Red/green LED (Lit when ON)	Red/green LED (Lit when ON)	LED (Lit when ON)		Without indicator lamp		LED (Lit when ON)			Red/green LED (Lit when ON)
Leakage current	≤ 1 mA at 100 VAC, ≤ 2 mA at 200 VAC	1 mA or less			10 μA or less				0 mA							1 mA or less
Weight g	1 m:33 3 m:87 5 m:142	1 m:18 3 m:49 5 m:80	1 m:33 3 m:87 5 m:142	1 m:18 3 m:49 5 m:80	1 m:18 3 m:49 5 m:80		1 m:33 3 m:87 5 m:142	1 m:18 3 m:49 5 m:80	1 m:18 3 m:49 5 m:80				1 m:33 3 m:87 5 m:142			1 m:61 3 m:166 5 m:272

*1 : Refer to Ending Page 1 for detailed switch specifications and dimensions.
*2 : Switches other than the above models, such as switches with connectors, are also available. Refer to Ending Page 1.
*3 : The max. load current is 20 mA at 25°C. The current is lower than 20 mA if the operating ambient temperature around the switch is higher than 25°C. (5 to 10 mA at 60°C)
*4 : Switch for AC magnetic field (T2YD/T2YDT) cannot be used in DC magnetic field.

Theoretical thrust table

(Unit: N)

Bore size (mm)	Operating direction	Working pressure MPa									
		0.15	0.2	0.3	0.4	0.5	0.6	0.7	0.8	0.9	1.0
ø20	Push	-	62.8	94.2	1.26×10^2	1.57×10^2	1.88×10^2	2.20×10^2	2.51×10^2	2.83×10^2	3.14×10^2
	Pull	-	47.1	70.7	94.2	1.18×10^2	1.41×10^2	1.65×10^2	1.88×10^2	2.12×10^2	2.36×10^2
ø25	Push	-	98.2	1.47×10^2	1.96×10^2	2.45×10^2	2.95×10^2	3.44×10^2	3.93×10^2	4.42×10^2	4.91×10^2
	Pull	-	75.6	1.13×10^2	1.51×10^2	1.89×10^2	2.27×10^2	2.64×10^2	3.02×10^2	3.40×10^2	3.78×10^2
ø32	Push	-	1.61×10^2	2.41×10^2	3.22×10^2	4.02×10^2	4.83×10^2	5.63×10^2	6.43×10^2	7.24×10^2	8.04×10^2
	Pull	-	1.21×10^2	1.81×10^2	2.41×10^2	3.02×10^2	3.62×10^2	4.22×10^2	4.83×10^2	5.43×10^2	6.03×10^2
ø40	Push	-	2.51×10^2	3.77×10^2	5.03×10^2	6.28×10^2	7.54×10^2	8.80×10^2	1.01×10^3	1.13×10^3	1.26×10^3
	Pull	-	2.11×10^2	3.17×10^2	4.22×10^2	5.28×10^2	6.33×10^2	7.39×10^2	8.44×10^2	9.50×10^2	1.06×10^3
ø50	Push	-	3.93×10^2	5.89×10^2	7.85×10^2	9.82×10^2	1.18×10^3	1.37×10^3	1.57×10^3	1.77×10^3	1.96×10^3
	Pull	-	3.30×10^2	4.95×10^2	6.60×10^2	8.25×10^2	9.90×10^2	1.15×10^3	1.32×10^3	1.48×10^3	1.65×10^3
ø63	Push	4.68×10^2	6.23×10^2	9.35×10^2	1.25×10^3	1.56×10^3	1.87×10^3	2.18×10^3	2.49×10^3	2.81×10^3	3.12×10^3
	Pull	4.20×10^2	5.61×10^2	8.41×10^2	1.12×10^3	1.40×10^3	1.68×10^3	1.96×10^3	2.24×10^3	2.52×10^3	2.80×10^3
ø80	Push	7.54×10^2	1.01×10^3	1.51×10^3	2.01×10^3	2.51×10^3	3.02×10^3	3.52×10^3	4.02×10^3	4.52×10^3	5.03×10^3
	Pull	6.80×10^2	9.07×10^2	1.36×10^3	1.81×10^3	2.27×10^3	2.72×10^3	3.17×10^3	3.63×10^3	4.08×10^3	4.54×10^3
ø100	Push	1.18×10^3	1.57×10^3	2.36×10^3	3.14×10^3	3.93×10^3	4.71×10^3	5.50×10^3	6.28×10^3	7.07×10^3	7.85×10^3
	Pull	1.07×10^3	1.43×10^3	2.14×10^3	2.86×10^3	3.57×10^3	4.29×10^3	5.00×10^3	5.72×10^3	6.43×10^3	7.15×10^3

How to order

Without switch (without magnet for switch)

SSD-KG5 - 20 ◯ - 5 ——— N - LB - I

With switch (built-in magnet for switch)

SSD-KG5L - 20 ◯ - 5 - T0H - R - N - LB - I

Ⓐ Model No.
Ⓑ Bore size
Ⓒ Port thread
Ⓓ Stroke length
Ⓔ Switch model No. *4
Ⓕ Switch quantity
Ⓖ Option
Ⓗ Mounting bracket *1 *2
Ⓘ Accessory *3

Precautions for model No. selection

*1 : The mounting bracket is included at shipment.
*2 : WF and wf dimensions of cylinders for "LB2" and "FA" are set 10 mm longer than those of the standard. Contact CKD for the cylinder model No. when individually ordering cylinders, LB2 brackets and FA brackets.
*3 : "I" and "Y" cannot be selected together.
*4 : Switches are shipped with the product. Contact CKD if assembling before shipment is necessary.

[Example of model No.]

SSD-KG5L-32-5-T0H-R-N

Model: Compact cylinder double acting single rod/high load/environment-resistant scraper

Ⓑ Bore size : ø32 mm
Ⓒ Port thread : Rc thread
Ⓓ Stroke length : 5 mm
Ⓔ Switch model No. : Reed switch T0H lead wire 1 m
Ⓕ Switch quantity : 1 on rod side
Ⓖ Option : Rod end male thread

Code	Description
Ⓐ Model No.	
SSD-KG5	Double acting/single rod/high load/environment-resistant scraper
SSD-KG5L	Double acting/single rod/high load/environment-resistant scraper/switch
Ⓑ Bore size (mm)	
20	ø20
25	ø25
32	ø32
40	ø40
50	ø50
63	ø63
80	ø80
100	ø100
Ⓒ Port thread	
Blank	Rc thread/M5 thread
NN	NPT thread (ø32 and over) (made-to-order product)
GN	G thread (ø32 and over) (made-to-order product)
Ⓓ Stroke length (mm)	
Refer to the stroke length table on the following page.	

Ⓔ Switch model No.

Axial lead wire	Radial lead wire	Contact	Voltage AC	Voltage DC	Display	Lead wire
TOH*	T0V*	Reed	●	●	1-color display	2-wire
T5H*	T5V*	Reed	●	●	Without indicator lamp	2-wire
T8H*	T8V*	Reed	●	●	1-color display	2-wire
T1H*	T1V*	Prox.	●		1-color display	2-wire
T2H*	T2V*	Prox.		●	1-color display	2-wire
T3H*	T3V*	Prox.		●	1-color display	3-wire
T3PH*	T3PV*	Prox.		●	1-color display (PNP output)	3-wire
T2WH*	T2WV*	Prox.		●	2-color display	2-wire
T2YH*	T2YV*	Prox.		●	2-color display	2-wire
T3WH*	T3WV*	Prox.		●	2-color display	3-wire
T3YH*	T3YV*	Prox.		●	2-color display	3-wire
T2JH*	T2JV*	Prox.		●	1-color display off-delay	2-wire
T2YD*	-	Prox.		●	2-color display for AC magnetic field	2-wire
T2YDT*	-	Prox.		●	2-color display for AC magnetic field	2-wire

* Lead wire length	
Blank	1 m (standard)
3	3 m (option)
5	5 m (option)
Ⓕ Switch quantity	
R	1 on rod side
H	1 on head side
D	2
Ⓖ Option	
Blank	Rod end female thread
N	Rod end male thread
Ⓗ Mounting bracket	
LB	Axial foot
LB2	Axial foot (compact)
CB	Clevis bracket (pin and snap ring included)
CB2	Clevis bracket (compact) (pin and snap ring included)
FA	Rod side flange
FB	Head side flange
Ⓘ Accessory (available when rod end male thread "N" is selected)	
I	Rod eye
I2	Rod eye (compact)
Y	Rod clevis (pin and snap ring included)
Y2	Rod clevis (compact) (pin and snap ring included)

[Stroke length table]

Stroke length (mm)		Applicable bore size							
		ø20	ø25	ø32	ø40	ø50	ø63	ø80	ø100
Standard stroke length	5	●							
	10	●	●	●	●	●	●	●	●
	15	●	●	●	●	●			
	20	●	●	●	●	●	●	●	●
	25	●	●	●	●	●			
	30	●	●	●	●	●	●	●	●
	40	●	●	●	●	●	●	●	●
	50	●	●	●	●	●	●	●	●
	60		●	●	●	●	●	●	●
	70		●	●	●	●	●	●	●
	80		●	●	●	●	●	●	●
	90		●	●	●	●	●	●	●
	100		●	●	●	●	●	●	●
Min. stroke length (mm) *1		1							
Max. stroke length (mm)		200	300						
Custom stroke length *2		In 1 mm increments							

1: Less than 5 mm for 1-color display switch and less than 10 mm for the 2-color display, off-delay, AC magnetic field proof, T1 or T8* switch are not available.
Refer to page 1280 for the number of installed switches and the min. stroke length.
*2: The total length is the same as that of the next longer standard stroke length.

How to order switch

SW - T0H

Switch model No.
(Item Ⓔ on page 1282)

Cylinder weight table (the weight of the switches is when there are 2 cylinder switches.)

(Unit: g)

Stroke length (mm)	5		10		15		20		25		30		40		50		60		70		80		90		100	
Bore size (mm)	No switch	Switch	No switch	Switch	No switch	Switch	No switch	Switch	No switch	Switch	No switch	Switch	No switch	Switch	No switch	Switch	No switch	Switch	No switch	Switch	No switch	Switch	No switch	Switch	No switch	Switch
ø20	107	182	120	195	133	208	145	220	158	233	170	245	195	270	220	295	245	320	270	345	295	370	320	395	345	420
ø25	-	-	162	253	178	269	194	285	209	300	226	317	258	349	290	381	322	413	354	445	386	477	418	509	450	541
ø32	-	-	251	365	272	386	294	408	316	430	338	452	381	495	424	538	467	581	510	624	553	667	596	710	639	753
ø40	-	-	349	492	376	519	402	545	428	571	455	598	508	651	561	704	614	757	667	810	720	863	773	916	826	969
ø50	-	-	560	754	602	796	645	839	688	882	729	923	813	1007	897	1091	981	1175	1065	1259	1149	1343	1233	1427	1317	1481
ø63	-	-	813	1092	-	-	923	1202	-	-	1034	1313	1144	1423	1254	1533	1364	1643	1474	1753	1584	1863	1694	1973	1804	2083
ø80	-	-	1413	1826	-	-	1586	1999	-	-	1760	2173	1933	2346	2106	2519	2279	2692	2452	2865	2625	3038	2798	3211	2971	3384
ø100	-	-	2106	2673	-	-	2334	2901	-	-	2561	3128	2789	3356	3017	3584	3245	3812	3473	4040	3701	4268	3929	4496	4157	4724

Stroke length (mm)	110		120		130		140		150		160		170		180		190		200	
Bore size (mm)	No switch	Switch	No switch	Switch	No switch	Switch	No switch	Switch	No switch	Switch	No switch	Switch	No switch	Switch	No switch	Switch	No switch	Switch	No switch	Switch
ø20	370	445	395	470	420	495	445	520	470	545	495	570	520	595	545	620	570	645	595	670
ø25	482	573	514	605	546	637	581	669	610	701	642	733	674	765	706	797	738	829	770	861
ø32	682	796	725	839	768	882	811	925	854	968	896	1010	939	1053	982	1096	1025	1139	1068	1182
ø40	879	1022	932	1075	985	1128	1038	1181	1091	1234	1144	1287	1197	1340	1250	1393	1303	1446	1356	1499
ø50	1401	1595	1485	1679	1569	1763	1653	1847	1737	1931	1835	2029	1920	2114	2005	2199	2090	2284	2175	2369
ø63	1914	2193	2024	2303	2134	2413	2244	2523	2354	2633	2464	2743	2574	2853	2684	2963	2794	3073	2904	3183
ø80	3144	3557	3317	3730	3490	3903	3663	4076	3836	4249	4009	4422	4182	4595	4355	4768	4528	4941	4701	5112
ø100	4385	4952	4613	5180	4841	5408	5069	5636	5297	5864	5525	6092	5753	6320	5981	6548	6209	6776	6437	7004

Stroke length (mm)	210		220		230		240		250		260		270		280		290		300	
Bore size (mm)	No switch	Switch	No switch	Switch	No switch	Switch	No switch	Switch	No switch	Switch	No switch	Switch	No switch	Switch	No switch	Switch	No switch	Switch	No switch	Switch
ø20	-	-	-	-	-	-	-	-	-	-	-	-	-	-	-	-	-	-	-	-
ø25	813	893	845	925	877	957	909	989	941	1021	973	1053	1005	1085	1037	1117	1069	1149	1101	1181
ø32	1111	1225	1154	1268	1197	1311	1240	1354	1283	1397	1326	1440	1369	1483	1412	1526	1455	1569	1498	1612
ø40	1409	1552	1462	1605	1515	1658	1568	1711	1621	1764	1674	1817	1727	1870	1780	1923	1833	1976	1886	2029
ø50	2260	2454	2345	2539	2430	2624	2515	2709	2600	2794	2685	2879	2770	2964	2855	3049	2940	3134	3025	3219
ø63	3013	3292	3123	3402	3233	3512	3343	3622	3453	3732	3563	3842	3673	3952	3783	4062	3893	4172	4003	4282
ø80	4873	5286	5046	5459	5219	5632	5392	5805	5565	5978	5738	6151	5911	6324	6084	6497	6257	6670	6430	6843
ø100	6666	7233	6894	7461	7122	7689	7350	7917	7578	8145	7806	8373	8034	8601	8262	8829	8490	9057	8718	9285

How to order mounting bracket

Bore size (mm) / Mounting bracket	ø20	ø25	ø32	ø40	ø50	ø63	ø80	ø100
Foot (LB)	SSD-LB-20	SSD-LB-25	SSD-LB-32	SSD-LB-40	SSD-LB-50	SSD-LB-63	SSD-LB-80	SSD-LB-100
Foot (LB2)	SSD-LB2-20	SSD-LB2-25	SSD-LB2-32	SSD-LB2-40	SSD-LB2-50	SSD-LB2-63	SSD-LB2-80	SSD-LB2-100
Flange (FA/FB)	SSD-FA-20	SSD-FA-25	SSD-FA-32	SSD-FA-40	SSD-FA-50	SSD-FA-63	SSD-FA-80	SSD-FA-100
Clevis bracket (CB)	SSD-CB-20	SSD-CB-25	SSD-CB-32	SSD-CB-40	SSD-CB-50	SSD-CB-63	SSD-CB-80	SSD-CB-100
Clevis bracket (CB2)	SSD-CB2-20	SSD-CB2-25	SSD-CB2-32	SSD-CB2-40	SSD-CB2-50	SSD-CB2-63	SSD-CB2-80	SSD-CB2-100

*1: The foot mounting bracket is provided as 2 pcs./set.

Internal structure and parts list (ø20 to ø50)

● SSD-KG5L-20/25
(double acting/high load/environment-resistant scraper/with switch)

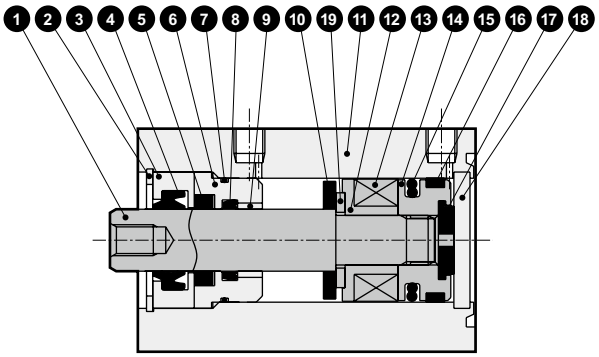

● SSD-KG5L-32/50
(double acting/high load/environment-resistant scraper/with switch)

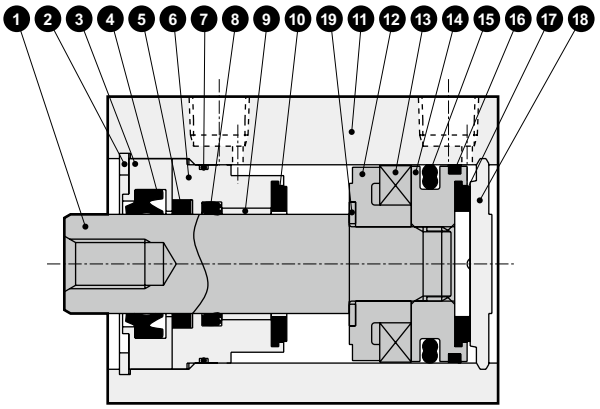

● SSD-KG5-20/25
(double acting/high load/environment-resistant scraper)

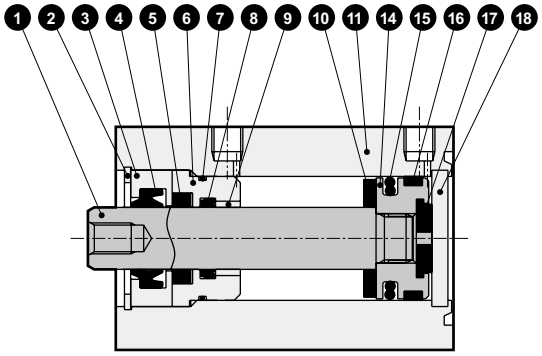

● SSD-KG5-32 to 50
(double acting/high load/environment-resistant scraper)

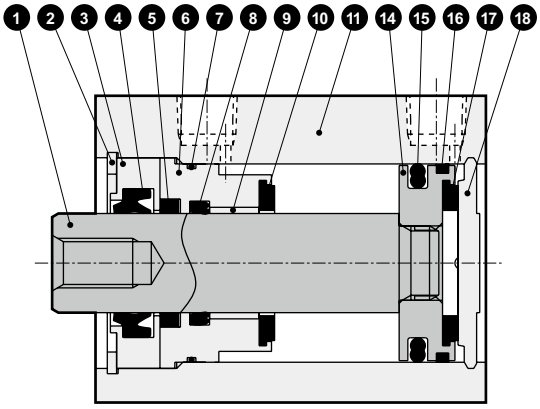

Main parts list

No.	Part name	Material	Remarks	No.	Part name	Material	Remarks
1	Piston rod	ø20/ø25: Stainless steel	Industrial chrome plating	11	Body	Aluminum alloy	Hard alumite
		ø32 to ø50: Steel		12	Spacer	Special resin	
2	C type snap ring	Steel	Zinc phosphate	13	Magnet	Plastic	
3	Rod metal 1	Special aluminum	Chromate	14	Piston	Aluminum alloy	Chromate
4	Scraper	Nitrile rubber		15	Piston packing	Nitrile rubber	
5	Lube keeping structure	Special rubber		16	Wear ring	Polyacetal resin	
6	Rod metal 2	Special aluminum	Alumite	17	Cushion rubber H	Urethane rubber	
7	Rod metal gasket	Nitrile rubber		18	Cover	ø20/ø25: Stainless steel	ø32 to ø50: Alumite
8	Rod packing	Nitrile rubber				ø32 to ø50: Aluminum alloy	
9	Bush	Dry bearing		19	Spacer washer	Stainless steel	
10	Cushion rubber R	Urethane rubber					

Repair parts list

Part name / Bore size (mm)	Kit No.	Repair parts No.
ø20	SSD-KG5-20K	❹ ❺ ❼ ❽ ❿ ⓯ ⓰ ⓱
ø25	SSD-KG5-25K	
ø32	SSD-KG5-32K	
ø40	SSD-KG5-40K	
ø50	SSD-KG5-50K	

Internal structure and parts list (ø63 to ø100)

● SSD-KG5L-63 to 100 (double acting/high load/environment-resistant scraper/with switch)

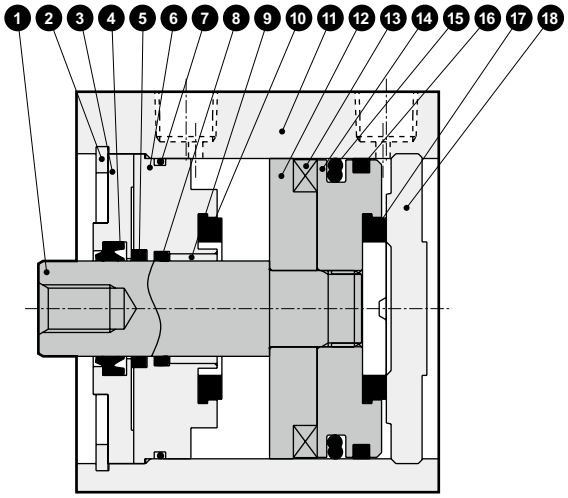

● SSD-KG5-63 to 100 (double acting/high load/environment-resistant scraper)

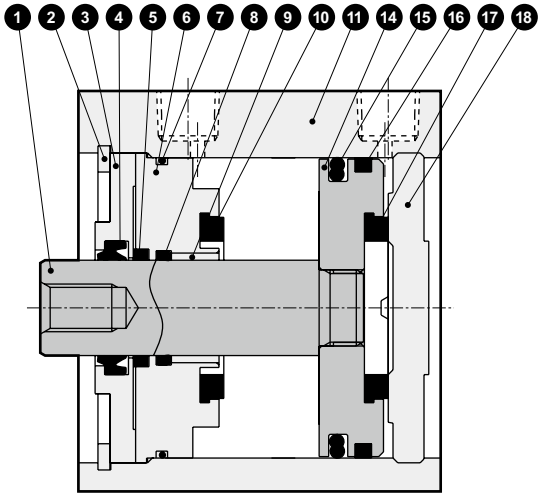

Main parts list

No.	Part name	Material	Remarks	No.	Part name	Material	Remarks
1	Piston rod	Steel	Industrial chrome plating	10	Cushion rubber R	Urethane rubber	
2	C type snap ring	Steel	Zinc phosphate	11	Body	Aluminum alloy	Hard alumite
3	Rod metal 1	Aluminum alloy	Chromate	12	Spacer	Aluminum alloy	Chromate
4	Scraper	Nitrile rubber		13	Magnet	Plastic	
5	Lube keeping structure	Special rubber		14	Piston	Aluminum alloy	Chromate
6	Rod metal 2	Aluminum alloy	Chromate	15	Piston packing	Nitrile rubber	
7	Rod metal gasket	Nitrile rubber		16	Wear ring	Polyacetal resin	
8	Rod packing	Nitrile rubber		17	Cushion rubber H	Urethane rubber	
9	Bush	Dry bearing		18	Cover	Aluminum alloy	Alumite

Repair parts list

Part name / Bore size (mm)	Kit No.	Repair parts No.
ø63	SSD-KG5-63K	4 5 7 8 10 15 16 17
ø80	SSD-KG5-80K	
ø100	SSD-KG5-100K	

SCP*3
CMK2
CMA2
SCM
SCG
SCA2
SCS2
CKV2
CAV2/COVP/N2
SSD2
SSG
SSD
CAT
MDC2
MVC
SMG
MSD/MSDG
FC*
STK
SRL3
SRG3
SRM3
SRT3
MRL2
MRG2
SM-25
ShkAbs
FJ
FK
Spd Contr
Ending

Dimensions (ø20, ø25)

● SSD-KG5L-20, 25 (with switch)

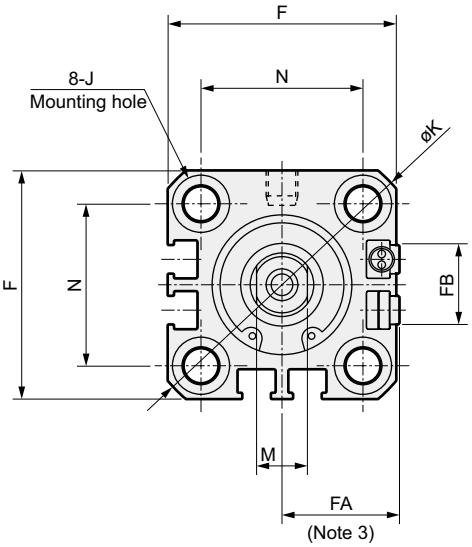

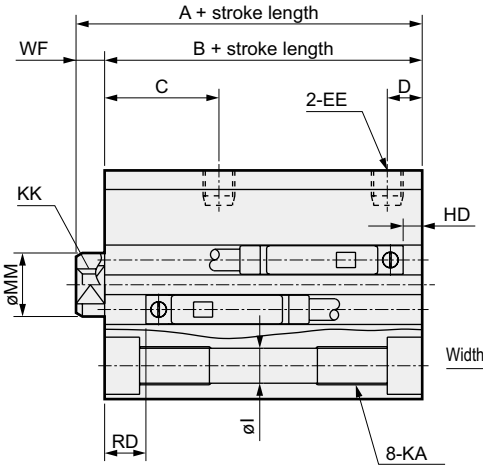

● Rod end male thread

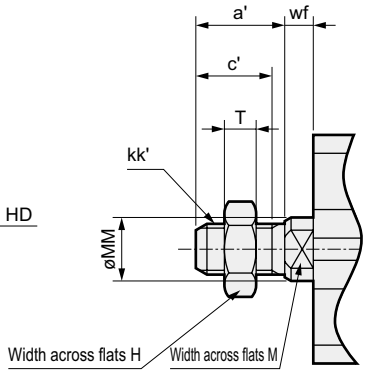

Code / Bore size	Without switch		Common dimensions with switch							
	A *1	B *1	A *1	B *1	C	D	EE	F	FA *3	FB
ø20	39	34.5	49	44.5	18	5.5	M5	36	18.5(22)	12.5
ø25	42.5	37.5	52.5	47.5	21	6	M5	40	20.5(24)	13.5

Code / Bore size	Common dimensions with switch								
	I	J	K	KA	KK	M	MM	N	WF
ø20	5.5	9 spot face depth 5.5	47	M6 depth 11	M5 depth 7	8	10	25.5	4.5
ø25	5.5	9 spot face depth 5.5	51	M6 depth 11	M6 depth 11	10	12	28	5

Switch dimensions / Bore size	Reed/proximity 1-color		Proximity 2-color		T8H/V switch	
	HD *5	RD *5	HD *5	RD *5	HD *5	RD *5
ø20	6(12.5)	18.5(23.5)	4.5(11)	18.5(23.5)	0(6.5)	12.5(17.5)
ø25	5.5(14)	22(27)	4(12.5)	22(27)	0(8)	16(21)

Table 1

Bore size	Without switch		With switch	
	A *1	B *1	A *1	B *1
ø20	50.5	46	60.5	56
ø25	56	51	66	61

*1 : To calculate A+ stroke length or B+ stroke length when using custom stroke length, apply the next longer standard stroke length (instead of the custom stroke length) to the stroke length value. (Example) If the custom stroke length is 7 mm, apply the standard stroke length of 10 mm.
*2 : HD and RD dimensions for 5 mm stroke length differ from these dimensions according to the setting.
*3 : Dimensions in ( ) of FA are for the radial lead wire.
*4 : Refer to pages 1320 to 1325 for dimensions including the accessories and pages 1108 to 1115 for dimensions of individual accessories.
*5 : When longer than 100 mm stroke for ø20 or longer than 150 mm stroke for ø25, A and B dimensions are indicated in Table 1 and there is no spot face J. HD, RD and D dimensions are indicated in ( ).

Rod end male thread

Code / Bore size	a'	c'	H	kk'	M	MM	T	wf
ø20	14	12	13	M8	8	10	5	4.5
ø25	17.5	15	17	M10×1.25	10	12	6	5

Dimensions (ø32 to ø100)

● SSD-KG5L-32 to 100 (with switch)

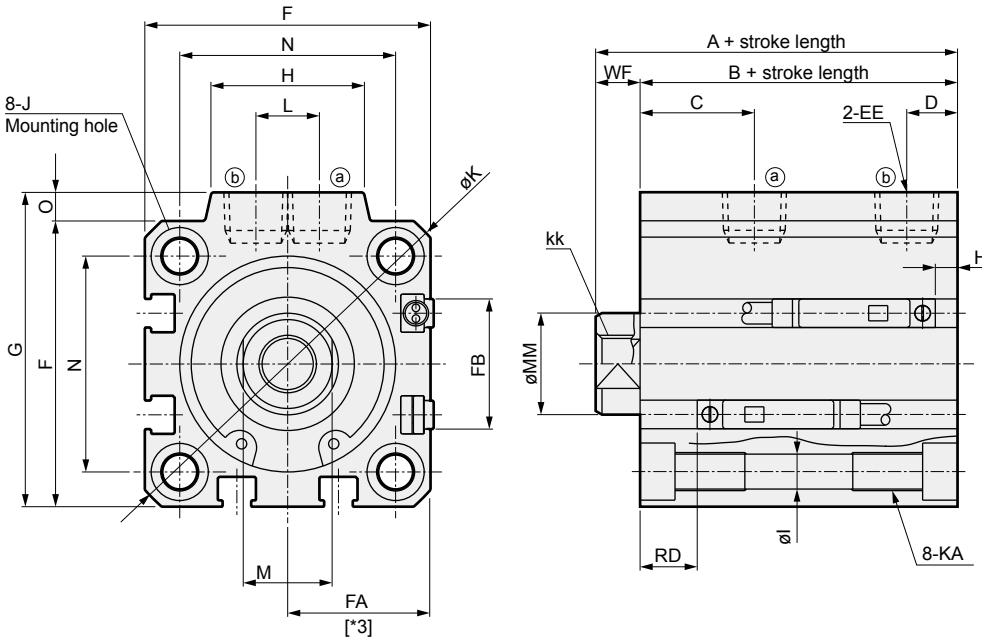

● Rod end male thread

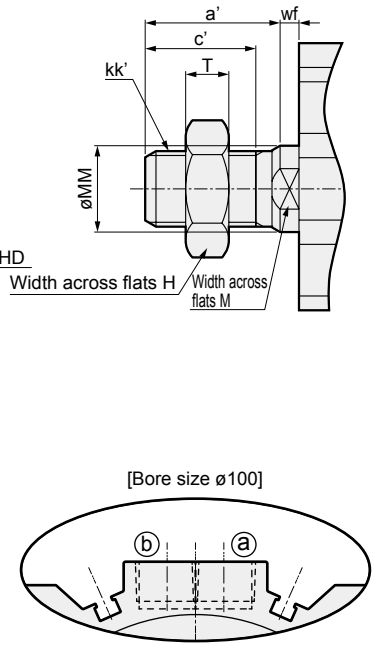

* Only for ø100, the port surface has switch grooves.

Code / Bore size	Without switch A *1	Without switch B *1	Common dimensions with switch A *1	B *1	C	D	EE	F	FA *3	FB	G	H
ø32	50	43	60	53	18	8	Rc1/8	45	23(26.5)	20.5	49.5	24
ø40	56.5	49.5	66.5	59.5	22	8.5	Rc1/8	52	26.5(30)	27.5	57	24
ø50	58.5	50.5	68.5	60.5	20.5	10.5	Rc1/4	64	32.5(36)	28.5	71	33
ø63	64	56	74	66	23	11	Rc1/4	77	39(42.5)	28.5	84	33
ø80	73.5	63.5	83.5	73.5	26	13	Rc3/8	98	49.5(53)	28.5	104	38
ø100	85	73	95	83	33	15	Rc3/8	117	59(62.5)	28.5	123.5	38

Code / Bore size	Common dimensions with switch I	J	K	KA	KK	L	M	MM	N	O	WF
ø32	5.5	9 spot face depth 5.5	60	M6 depth 11	M8 depth 13	10	14	16	34	4.5	7
ø40	5.5	9 spot face depth 5.5	69	M6 depth 11	M8 depth 13	10	14	16	40	5	7
ø50	6.9	11 spot face depth 6.5	86	M8 depth 13	M10 depth 15	15	17	20	50	7	8
ø63	8.7	14 spot face depth 9	103	M10 depth 25	M10 depth 15	15	17	20	60	7	8
ø80	10.5	17.5 spot face depth 11	132	M12 depth 28	M16 depth 21	15	22	25	77	6	10
ø100	10.5	17.5 spot face depth 11	156	M12 depth 29	M20 depth 27	15	27	30	94	6.5	12

Switch dimensions / Bore size	Reed/proximity 1-color HD *4	Reed/proximity 1-color RD *4	Proximity 2-color HD *4	Proximity 2-color RD *4	T8H/V switch HD *4	T8H/V switch RD *4
ø32	8.5(16)	24(24)	7(14.5)	22.5(22.5)	2.5(10)	18(18)
ø40	9.5(19)	29.5(29.5)	8(17.5)	28(28)	3.5(13)	23.5(23.5)
ø50	10(19)	30(35)	8.5(17.5)	28.5(33.5)	4(13)	24(29)
ø63	17.5(23)	28(33)	16(21.5)	26.5(31.5)	11.5(17)	22(27)
ø80	22(28)	30.5(35.5)	20.5(26.5)	29(34)	16(22)	24.5(29.5)
ø100	28(33.5)	34.5(39.5)	26.5(32)	33(38)	22(27.5)	28.5(33.5)

*1 : To calculate A+ stroke length or B+ stroke length when using custom stroke length, apply the next longer standard stroke length (instead of the custom stroke length) to the stroke length value.
(Example) If the custom stroke length is 7 mm, apply the standard stroke length of 10 mm.
*2 : HD and RD dimensions for 5 mm stroke length differ from these dimensions according to the setting.
*3 : Dimensions in ( ) of FA are for the radial lead wire.
*4 : When longer than 150 mm stroke for ø32 to ø50 or longer than 200 mm stroke for ø63 to ø100, A and B dimensions are indicated in Table 1 and there is no spot face J. HD, RD and D dimensions are indicated in ( ).

Rod end male thread

Code / Bore size	a'	c'	H	kk'	M	MM	T	wf
ø32	23.5	20.5	22	M14×1.5	14	16	8	5
ø40	23.5	20.5	22	M14×1.5	14	16	8	5
ø50	28.5	26	27	M18×1.5	17	20	11	5
ø63	28.5	26	27	M18×1.5	17	20	11	5
ø80	35.5	32.5	32	M22×1.5	22	25	13	8
ø100	35.5	32.5	41	M26×1.5	27	30	16	8

Table 1

Bore size	Without switch A *1	Without switch B *1	With switch A *1	With switch B *1
ø32	57.5	50.5	67.5	60.5
ø40	66	59	76	69
ø50	72	64	82	74
ø63	74	66	84	76
ø80	83.5	73.5	93.5	83.5
ø100	95	83	105	93

* Refer to pages 1320 to 1325 for dimensions including the accessories and pages 1108 to 1115 for dimensions of individual accessories.

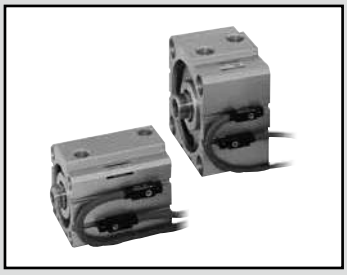

Compact cylinder double acting/single rod/with strong magnetic field proof switch

SSD-L4 Series

● Bore size: ø40/ø50/ø63/ø80/ø100

JIS symbol

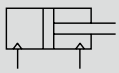

RoHS

Specifications

Item	SSD-L4				
Bore size mm	ø40	ø50	ø63	ø80	ø100
Actuation	Double acting				
Working fluid	Compressed air				
Max. working pressure MPa	1.0 (≈150 psi, 10 bar)				
Min. working pressure MPa	0.1 (≈15 psi, 1 bar)		0.05 (≈7.3 psi, 0.5 bar)		
Proof pressure MPa	1.6 (≈230 psi, 16 bar)				
Ambient temperature °C	-10 (14°F) to 60 (140°F) (no freezing)				
Port size	Rc1/8	Rc1/4		Rc3/8	
Stroke tolerance mm	$^{+1.0}_{0}$				
Working piston speed mm/s	50 to 500		50 to 300		
Cushion	None				
Lubrication	Not required (use turbine oil class 1 ISO VG32 if necessary for lubrication)				
Allowable absorbed energy J	0.092	0.1	0.12	0.27	0.56

Stroke length

Bore size (mm)	Standard stroke length (mm)	Max. stroke length (mm)	Min. stroke length (mm)
ø40	20, 30, 40, 50	50	20
ø50			
ø63			
ø80			
ø100			

*1: The custom stroke length is available in 1mm increments. However, the total length is the same as that of the next longer standard stroke length.

Number of installed switches and min. stroke length (mm)

Switch quantity	1	2	3
Switch model No. / Bore size (mm)	V0		
ø40	20	20	35
ø50	20	20	35
ø63	20	20	35
ø80	20	20	35
ø100	20	20	35

Switch specifications

Item	Reed 2-wire V0	
Applications	For relay, programmable controller	
Load voltage	12/24 VDC	110 VAC
Load current	5 to 50 mA	7 to 20 mA
Internal voltage drop	3.0 V or less (with 40 mA load current)	
Indicator lamp	LED (Lit when ON)	
Leakage current	0 mA	
Weight g	1 m:63 3 m:170 5 m:277	

Cylinder weight table (the weight of the switches is when there are 2 cylinder switches.)

(Unit: g)

Stroke length (mm) / Bore size (mm)	20	30	40	50
ø40	493	546	599	652
ø50	757	841	925	1009
ø63	1089	1200	1311	1422
ø80	1822	1996	2170	2344
ø100	2665	2892	3119	3346

Theoretical thrust table

(Unit: N)

Bore size (mm)	Operating direction	Working pressure MPa											
		0.05	0.1	0.15	0.2	0.3	0.4	0.5	0.6	0.7	0.8	0.9	1.0
ø40	Push	-	1.26×10^2	1.88×10^2	2.51×10^2	3.77×10^2	5.03×10^2	6.28×10^2	7.54×10^2	8.80×10^2	1.01×10^3	1.13×10^3	1.26×10^3
	Pull	-	1.06×10^2	1.58×10^2	2.11×10^2	3.17×10^2	4.22×10^2	5.28×10^2	6.33×10^2	7.39×10^2	8.44×10^2	9.50×10^2	1.06×10^3
ø50	Push	-	1.96×10^2	2.95×10^2	3.93×10^2	5.89×10^2	7.85×10^2	9.82×10^2	1.18×10^3	1.37×10^3	1.57×10^3	1.77×10^3	1.96×10^3
	Pull	-	1.65×10^2	2.47×10^2	3.30×10^2	4.95×10^2	6.60×10^2	8.25×10^2	9.90×10^2	1.15×10^3	1.32×10^3	1.48×10^3	1.65×10^3
ø63	Push	1.56×10^2	3.12×10^2	4.68×10^2	6.23×10^2	9.35×10^2	1.25×10^3	1.56×10^3	1.87×10^3	2.18×10^3	2.49×10^3	2.81×10^3	3.12×10^3
	Pull	1.40×10^2	2.80×10^2	4.20×10^2	5.61×10^2	8.41×10^2	1.12×10^3	1.40×10^3	1.68×10^3	1.96×10^3	2.24×10^3	2.52×10^3	2.80×10^3
ø80	Push	2.51×10^2	5.03×10^2	7.54×10^2	1.01×10^3	1.51×10^3	2.01×10^3	2.51×10^3	3.02×10^3	3.52×10^3	4.02×10^3	4.52×10^3	5.03×10^3
	Pull	2.27×10^2	4.54×10^2	6.80×10^2	9.07×10^2	1.36×10^3	1.81×10^3	2.27×10^3	2.72×10^3	3.17×10^3	3.63×10^3	4.08×10^3	4.54×10^3
ø100	Push	3.93×10^2	7.85×10^2	1.18×10^3	1.57×10^3	2.36×10^3	3.14×10^3	3.93×10^3	4.71×10^3	5.50×10^3	6.28×10^3	7.07×10^3	7.85×10^3
	Pull	3.57×10^2	7.15×10^2	1.07×10^3	1.43×10^3	2.14×10^3	2.86×10^3	3.57×10^3	4.29×10^3	5.00×10^3	5.72×10^3	6.43×10^3	7.15×10^3

How to order

SSD-L4 - 50 - 40 - V0 - D - N - LB - I

- SSD-L4: Model No.
- 50: Ⓐ Bore size
- 40: Ⓑ Stroke length
- V0: Ⓒ Switch model No. *4
- D: Ⓓ Switch quantity
- N: Ⓔ Option
- LB: Ⓕ Mounting bracket *1 *2
- I: Ⓖ Accessory *3

Code	Description
Ⓐ Bore size (mm)	
40	ø40
50	ø50
63	ø63
80	ø80
100	ø100

Ⓑ Stroke length (mm)

Bore size	Stroke length *1	Custom stroke length *2
ø40 to ø100	**20 to 50**	**In 1 mm increments**

*1: Refer to page 1288 for the number of installed switches and the min. stroke length.
*2: The total length is the same as that of the next longer standard stroke length.

Ⓒ Switch model No.

Axial lead wire	Contact	Voltage AC	Voltage DC	Display	Lead wire
V0*	Reed	●	●	1-color display	2-wire

* Lead wire length	
Blank	1 m (standard)
3	3 m (option)
5	5 m (option)

Ⓓ Switch quantity	
R	1 on rod side
H	1 on head side
D	2
T	3

Ⓔ Option	
Blank	Rod end female thread
N	Rod end male thread

Ⓕ Mounting bracket	
LB	Axial foot
LB2	Axial foot (compact)
CB	Clevis bracket (pin and snap ring included)
CB2	Clevis bracket (compact) (pin and snap ring included)
FA	Rod side flange
FB	Head side flange

Ⓖ Accessory (available when rod end male thread "N" is selected)	
I	Rod eye
I2	Rod eye (compact)
Y	Rod clevis (pin and snap ring included)
Y2	Rod clevis (compact) (pin and snap ring included)

⚠ Precautions for model No. selection

*1 : The mounting bracket is included at shipment.
*2 : The projection dimension of piston rod WF when LB2 or FA is selected is different from that of the standard. Refer to the dimensions on pages 1109 and 1110. The number of the specified protruding dimension will be added at the end of the model No. printed on the metal plate on the body.
*3 : "I" and "Y" cannot be selected together.
*4 : Switches are shipped with the product. Contact CKD if assembling before shipment is necessary.

[Example of model No.]

SSD-L4-50-40-V0-D-N-LB-I

Model: Compact cylinder double acting/single rod/ with strong magnetic field proof switch

Ⓐ Bore size : ø50 mm
Ⓑ Stroke length : 40 mm
Ⓒ Switch model No. : Reed switch V0, lead wire length 1 m
Ⓓ Switch quantity : 2
Ⓔ Option : Rod end male thread
Ⓕ Mounting bracket : Axial foot
Ⓖ Accessory : Rod eye

How to order switch

SW - V0

Switch model No.
(Item Ⓒ on page 1290)

How to order mounting bracket

Bore size (mm) / Mounting bracket	ø40	ø50	ø63	ø80	ø100
Foot (LB)	SSD-LB-40	SSD-LB-50	SSD-LB-63	SSD-LB-80	SSD-LB-100
Foot (LB2)	SSD-LB2-40	SSD-LB2-50	SSD-LB2-63	SSD-LB2-80	SSD-LB2-100
Flange (FA/FB)	SSD-FA-40	SSD-FA-50	SSD-FA-63	SSD-FA-80	SSD-FA-100
Clevis bracket (CB)	SSD-CB-40	SSD-CB-50	SSD-CB-63	SSD-CB-80	SSD-CB-100
Clevis bracket (CB2)	SSD-CB2-40	SSD-CB2-50	SSD-CB2-63	SSD-CB2-80	SSD-CB2-100

*1: The foot mounting bracket is provided as 2 pcs./set.

Internal structure and parts list

● SSD-L4-40

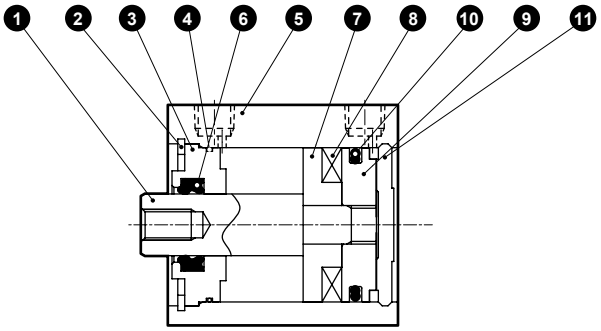

● SSD-L4-50

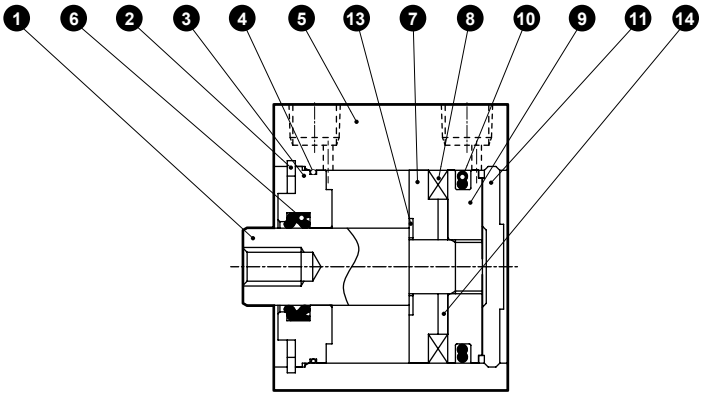

● SSD-L4-63 to 100

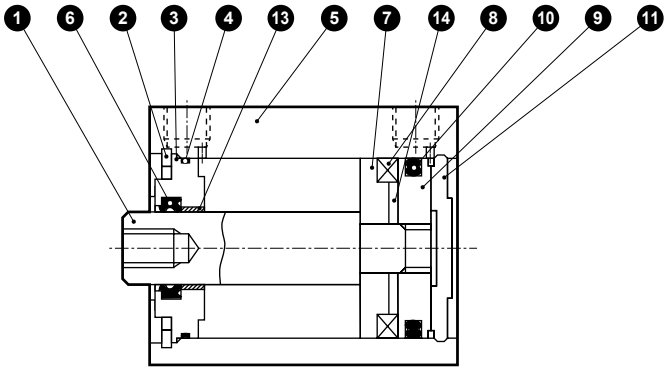

No.	Part name	Material	Remarks
1	Piston rod	Steel	Industrial chrome plating
2	C type snap ring	Steel	Zinc phosphate
3	Rod metal	ø40, ø50: Special aluminum ø63 to ø100: Aluminum alloy	Alumite
4	Rod metal gasket	Nitrile rubber	
5	Body	Aluminum alloy	Hard alumite
6	Rod packing	Nitrile rubber	
7	Spacer	Aluminum alloy (resin for ø50 only)	Chromate

No.	Part name	Material	Remarks
8	Magnet	Plastic	
9	Piston	Aluminum alloy	Chromate
10	Piston packing	Nitrile rubber	
11	Cover	Aluminum alloy	Alumite
12	Bush	Oiles drymet	
13	Spacer washer	Stainless steel	ø50
14	Collar	Aluminum alloy	ø50 to ø100

Repair parts list

Bore size (mm)	Kit No.	Repair parts No.
ø40	SSD-40K	❹ ❻ ❿
ø50	SSD-50K	
ø63	SSD-63K	
ø80	SSD-80K	
ø100	SSD-100K	

Dimensions

● SSD-L4-40 to 100

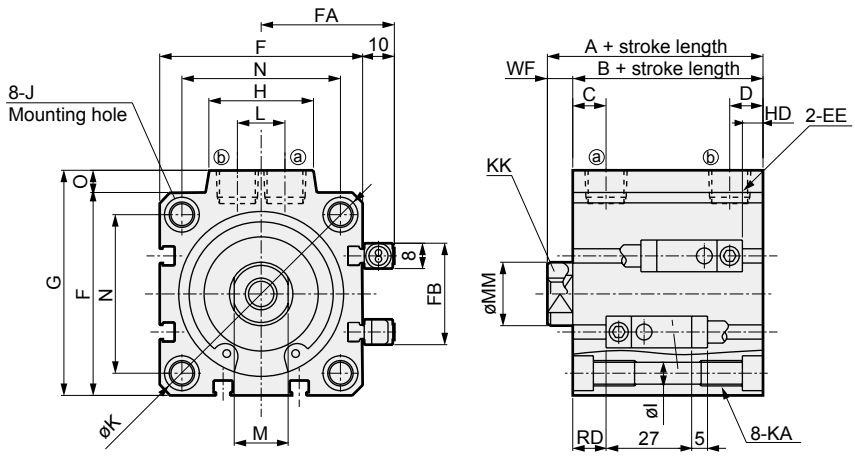

● Rod end male thread

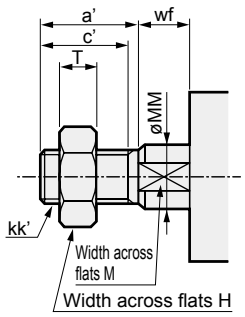

[Bore size ø100]

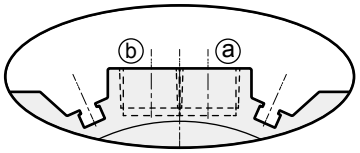

* Only for ø100, the port surface has switch grooves.

Code / Bore size	A	B	C	D	EE	F	FA	FB	G	H	I	J
ø40	56.5	49.5	12	8.5	Rc1/8	52	36	31	57	24	5.5	Spot face ø9, depth 5.5, ø5.5 through hole
ø50	58.5	50.5	10.5	10.5	Rc1/4	64	42	32	71	33	6.9	Spot face ø11, depth 6.5, ø6.9 through hole
ø63	64	56	13	11	Rc1/4	77	48.5	32	84	33	8.7	Spot face ø14, depth 9, ø8.7 through hole
ø80	73.5	63.5	16	13	Rc3/8	98	59	32	104	38	10.5	Spot face ø17.5, depth 11, ø10.5 through hole
ø100	85	73	23	15	Rc3/8	117	68.5	32	123.5	38	10.5	Spot face ø17.5, depth 11, ø10.5 through hole

Code / Bore size	K	KA	KK	M	MM	N	O	WF	HD	RD
ø40	69	M6 depth 11	M8 depth 13	14	16	40	5	7	7.5	13
ø50	86	M8 depth 13	M10 depth 15	17	20	50	7	8	8.5	13
ø63	103	M10 depth 25	M10 depth 15	17	20	60	7	8	13.5	13.5
ø80	132	M12 depth 28	M16 depth 21	22	25	77	6	10	18.5	16
ø100	156	M12 depth 28	M20 depth 27	27	30	94	6.5	12	24	20

*1: The A, B dimensions when using a custom stroke length are the same as those of when using the next longer standard stroke length.

● Dimensions of rod end male thread

Code / Bore size (mm)	a'	C'	H	kk'	M	MM	T	wf'
ø40	23.5	20.5	22	M14×1.5	14	16	8	5
ø50	28.5	26	27	M18×1.5	17	20	11	5
ø63	28.5	26	27	M18×1.5	17	20	11	5
ø80	35.5	32.5	32	M22×1.5	22	25	13	8
ø100	35.5	32.5	41	M26×1.5	27	30	16	8

* For dimensions of individual accessories, refer to pages 1108 to 1115.

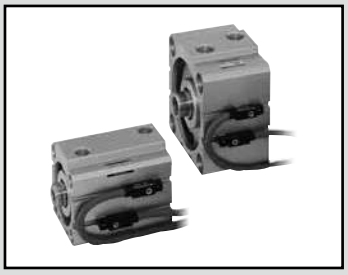

Compact cylinder double acting/single rod
with strong magnetic field proof switch/with coil scraper

SSD-G1L4 Series

● Bore size: ø40/ø50/ø63/ø80/ø100

JIS symbol

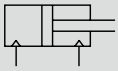

RoHS

Specifications

Item	SSD-G1L4				
Bore size mm	ø40	ø50	ø63	ø80	ø100
Actuation	Double acting				
Working fluid	Compressed air				
Max. working pressure MPa	1.0 (≈150 psi, 10 bar)				
Min. working pressure MPa	0.15 (≈22 psi, 1.5 bar)		0.1 (≈15 psi, 1 bar)		
Proof pressure MPa	1.6 (≈230 psi, 16 bar)				
Ambient temperature °C	-10 (14°F) to 60 (140°F) (no freezing)				
Port size	Rc1/8	Rc1/4		Rc3/8	
Stroke tolerance mm	$^{+1.0}_{0}$				
Working piston speed mm/s	50 to 500		50 to 300		
Cushion	None				
Lubrication	Not required (use turbine oil class 1 ISO VG32 if necessary for lubrication)				
Allowable absorbed energy J	0.092	0.1	0.12	0.27	0.56

Stroke length

Bore size (mm)	Standard stroke length (mm)	Max. stroke length (mm)	Min. stroke length (mm)
ø40	20, 30, 40, 50	50	20
ø50			
ø63			
ø80			
ø100			

*1: The custom stroke length is available in 1mm increments. However, the total length is the same as that of the next longer standard stroke length.

Number of installed switches and min. stroke length (mm)

Switch quantity	1	2	3
Switch model No. / Bore size (mm)	V0		
ø40	20	20	35
ø50	20	20	35
ø63	20	20	35
ø80	20	20	35
ø100	20	20	35

Switch specifications

Item	Reed 2-wire	
	VO	
Applications	For relay, programmable controller	
Load voltage	12/24 VDC	110 VAC
Load current	5 to 50 mA	7 to 20 mA
Internal voltage drop	3.0 V or less (with 40 mA load current)	
Indicator lamp	LED (Lit when ON)	
Leakage current	O mA	
Weight g	1 m:63 3 m:170 5 m:277	

Cylinder weight table (the weight of the switches is when there are 2 cylinder switches.)

(Unit: g)

Stroke length (mm) / Bore size (mm)	20	30	40	50
ø40	575	628	681	734
ø50	876	960	1044	1128
ø63	1240	1351	1462	1573
ø80	2074	2248	2422	2596
ø100	3000	3227	3454	3681

Theoretical thrust table

(Unit: N)

Bore size (mm)	Operating direction	Working pressure MPa										
		0.1	0.15	0.2	0.3	0.4	0.5	0.6	0.7	0.8	0.9	1.0
ø40	Push	-	1.88×10^2	2.51×10^2	3.77×10^2	5.03×10^2	6.28×10^2	7.54×10^2	8.80×10^2	1.01×10^3	1.13×10^3	1.26×10^3
	Pull	-	1.58×10^2	2.11×10^2	3.17×10^2	4.22×10^2	5.28×10^2	6.33×10^2	7.39×10^2	8.44×10^2	9.50×10^2	1.06×10^3
ø50	Push	-	2.95×10^2	3.93×10^2	5.89×10^2	7.85×10^2	9.82×10^2	1.18×10^3	1.37×10^3	1.57×10^3	1.77×10^3	1.96×10^3
	Pull	-	2.47×10^2	3.30×10^2	4.95×10^2	6.60×10^2	8.25×10^2	9.90×10^2	1.15×10^3	1.32×10^3	1.48×10^3	1.65×10^3
ø63	Push	3.12×10^2	4.68×10^2	6.23×10^2	9.35×10^2	1.25×10^3	1.56×10^3	1.87×10^3	2.18×10^3	2.49×10^3	2.81×10^3	3.12×10^3
	Pull	2.80×10^2	4.20×10^2	5.61×10^2	8.41×10^2	1.12×10^3	1.40×10^3	1.68×10^3	1.96×10^3	2.24×10^3	2.52×10^3	2.80×10^3
ø80	Push	5.03×10^2	7.54×10^2	1.01×10^3	1.51×10^3	2.01×10^3	2.51×10^3	3.02×10^3	3.52×10^3	4.02×10^3	4.52×10^3	5.03×10^3
	Pull	4.54×10^2	6.80×10^2	9.07×10^2	1.36×10^3	1.81×10^3	2.27×10^3	2.72×10^3	3.17×10^3	3.63×10^3	4.08×10^3	4.54×10^3
ø100	Push	7.85×10^2	1.18×10^3	1.57×10^3	2.36×10^3	3.14×10^3	3.93×10^3	4.71×10^3	5.50×10^3	6.28×10^3	7.07×10^3	7.85×10^3
	Pull	7.15×10^2	1.07×10^3	1.43×10^3	2.14×10^3	2.86×10^3	3.57×10^3	4.29×10^3	5.00×10^3	5.72×10^3	6.43×10^3	7.15×10^3

How to order

SSD-G1L4 - 50 - 40 - V0 - D - N - LB - I

- SSD-G1L4: Model No.
- 50: Ⓐ Bore size
- 40: Ⓑ Stroke length
- V0: Ⓒ Switch model No. *4
- D: Ⓓ Switch quantity
- N: Ⓔ Option
- LB: Ⓕ Mounting bracket *1 *2
- I: Ⓖ Accessory *3

Code	Description
Ⓐ Bore size (mm)	
40	ø40
50	ø50
63	ø63
80	ø80
100	ø100

Ⓑ Stroke length (mm)

Bore size	Stroke length *1	Custom stroke length *2
ø40 to ø100	**20 to 50**	**In 1 mm increments**

*1: Refer to page 1294 for the number of installed switches and the min. stroke length.
*2: The total length is the same as that of the next longer standard stroke length.

Ⓒ Switch model No.

Axial lead wire	Contact	Voltage		Display	Lead wire
		AC	DC		
V0*	Reed	●	●	1-color display	2-wire

*** Lead wire length**

Blank	1 m (standard)
3	3 m (option)
5	5 m (option)

Ⓓ Switch quantity

R	1 on rod side
H	1 on head side
D	2
T	3

Ⓔ Option

Blank	Rod end female thread
N	Rod end male thread

Ⓕ Mounting bracket

LB	Axial foot
LB2	Axial foot (compact)
CB	Clevis bracket (pin and snap ring included)
CB2	Clevis bracket (compact) (pin and snap ring included)
FA	Rod side flange
FB	Head side flange

Ⓖ Accessory (available when rod end male thread "N" is selected)

I	Rod eye
I2	Rod eye (compact)
Y	Rod clevis (pin and snap ring included)
Y2	Rod clevis (compact) (pin and snap ring included)

⚠ Precautions for model No. selection

*1 : The mounting bracket is included at shipment.
*2 : The projection dimension of piston rod WF when LB2 or FA is selected is different from that of the standard. Refer to the dimensions on pages 1109 and 1110. The number of the specified protruding dimension will be added at the end of the model No. printed on the metal plate on the body.
*3 : "I" and "Y" cannot be selected together.
*4 : Switches are shipped with the product. Contact CKD if assembling before shipment is necessary.

[Example of model No.]

SSD-G1L4-50-40-V0-D-N-LB-I

Model: Compact cylinder double acting/with coil scraper/ with strong magnetic field proof switch

Ⓐ Bore size : ø50 mm
Ⓑ Stroke length : 40 mm
Ⓒ Switch model No. : Reed switch V0, lead wire length 1 m
Ⓓ Switch quantity : 2
Ⓔ Option : Rod end male thread
Ⓕ Mounting bracket : Axial foot
Ⓖ Accessory : Rod eye

How to order switch

SW - V0

Switch model No.
(Item Ⓒ on page 1296)

How to order mounting bracket

Bore size (mm) / Mounting bracket	ø40	ø50	ø63	ø80	ø100
Foot (LB)	SSD-LB-40	SSD-LB-50	SSD-LB-63	SSD-LB-80	SSD-LB-100
Foot (LB2)	SSD-LB2-40	SSD-LB2-50	SSD-LB2-63	SSD-LB2-80	SSD-LB2-100
Flange (FA/FB)	SSD-FA-40	SSD-FA-50	SSD-FA-63	SSD-FA-80	SSD-FA-100
Clevis bracket (CB)	SSD-CB-40	SSD-CB-50	SSD-CB-63	SSD-CB-80	SSD-CB-100
Clevis bracket (CB2)	SSD-CB2-40	SSD-CB2-50	SSD-CB2-63	SSD-CB2-80	SSD-CB2-100

*1: The foot mounting bracket is provided as 2 pcs./set.

Internal structure and parts list

● SSD-G1L4-40

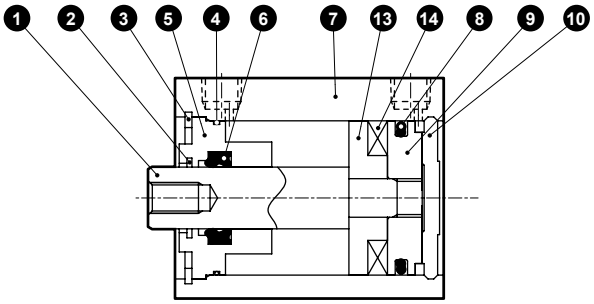

● SSD-G1L4-50

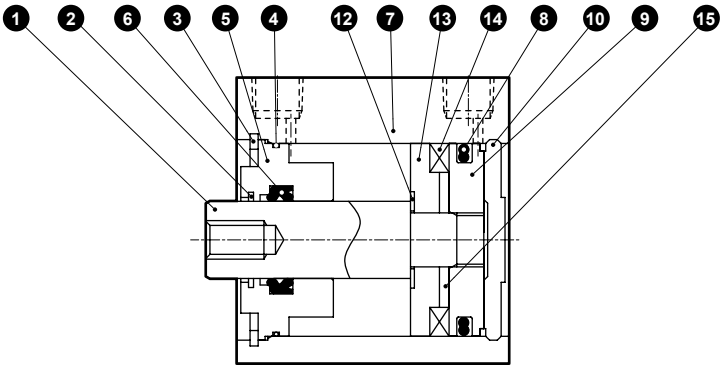

● SSD-G1L4-63 to 100

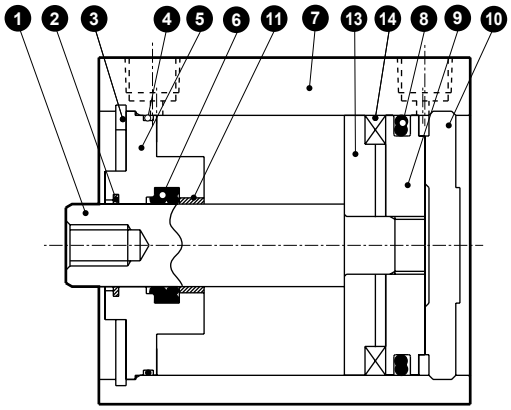

No.	Part name	Material	Remarks	No.	Part name	Material	Remarks
1	Piston rod	Steel	Industrial chrome plating	9	Piston	Aluminum alloy	Chromate
2	Coil scraper	Phosphor bronze		10	Cover	Aluminum alloy	Chromate
3	C type snap ring for hole	Steel	Zinc phosphate	11	Bush	Oiles drymet	ø63 to ø100
4	Rod metal gasket	Nitrile rubber		12	Spacer washer	Stainless steel	ø50
5	Rod metal	ø40, ø50: Special aluminum ø63 to ø100: Aluminum alloy		13	Spacer	Aluminum alloy (resin for ø50 only)	Chromate
6	Rod packing	Nitrile rubber	Chromate	14	Magnet	Plastic	
7	Tube body	Aluminum alloy	Hard alumite	15	Collar	Aluminum alloy	ø50 to ø100
8	Piston packing	Nitrile rubber					

Repair parts list

Part name / Bore size (mm)	Kit No.	Repair parts No.
ø40	SSD-G1-40K	❷ ❹ ❻ ❽
ø50	SSD-G1-50K	
ø63	SSD-G1-63K	
ø80	SSD-G1-80K	
ø100	SSD-G1-100K	

Dimensions

● SSD-G1L4-40 to 100

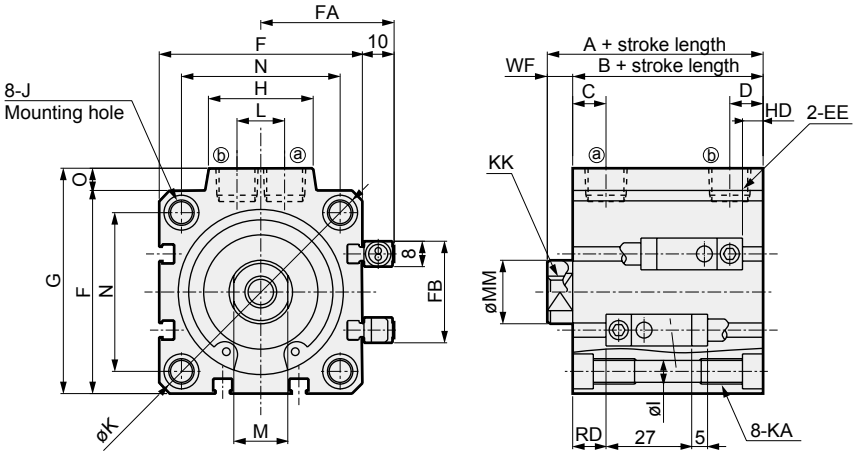

● Rod end male thread

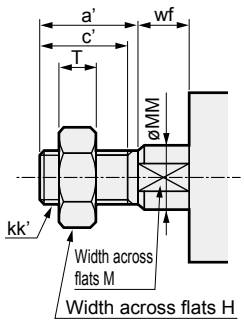

[Bore size ø100]

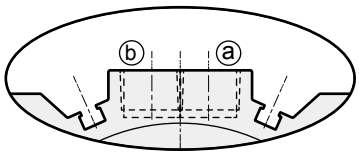

* Only for ø100, the port surface has switch grooves.

Code / Bore size	A	B	C	D	EE	F	FA	FB	G	H	I	J
ø40	66.5	59.5	12	8.5	Rc1/8	52	36	31	57	24	5.5	Spot face ø9, depth 5.5, ø5.5 through hole
ø50	68.5	60.5	10.5	10.5	Rc1/4	64	42	32	71	33	6.9	Spot face ø11, depth 6.5, ø6.9 through hole
ø63	74	66	13	11	Rc1/4	77	48.5	32	84	33	8.7	Spot face ø14, depth 9, ø8.7 through hole
ø80	83.5	73.5	16	13	Rc3/8	98	59	32	104	38	10.5	Spot face ø17.5, depth 11, ø10.5 through hole
ø100	95	83	23	15	Rc3/8	117	68.5	32	123.5	38	10.5	Spot face ø17.5, depth 11, ø10.5 through hole

Code / Bore size	K	KA	KK	L	M	MM	N	O	WF	HD	RD
ø40	69	M6 depth 11	M8 depth 13	10	14	16	40	5	7	7.5	23
ø50	86	M8 depth 13	M10 depth 15	15	17	20	50	7	8	8.5	23
ø63	103	M10 depth 25	M10 depth 15	15	17	20	60	7	8	13.5	23.5
ø80	132	M12 depth 28	M16 depth 21	15	22	25	77	6	10	18.5	26
ø100	156	M12 depth 28	M20 depth 27	15	27	30	94	6.5	12	24	30

*1: The A, B dimensions when using a custom stroke length are the same as those of when using the next longer standard stroke length.

● Dimensions of rod end male thread

Code / Bore size (mm)	a'	C'	H	kk'	M	MM	T	wf'
ø40	23.5	20.5	22	M14×1.5	14	16	8	5
ø50	28.5	26	27	M18×1.5	17	20	11	5
ø63	28.5	26	27	M18×1.5	17	20	11	5
ø80	35.5	32.5	32	M22×1.5	22	25	13	8
ø100	35.5	32.5	41	M26×1.5	27	30	16	8

* For dimensions of individual accessories, refer to pages 1108 to 1115.

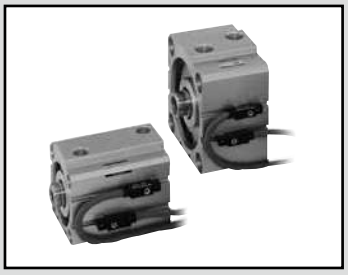

Compact cylinder double acting/high load/
with strong magnetic field proof switch

SSD-KL4 Series

● Bore size: ø40/ø50/ø63/ø80/ø100

JIS symbol

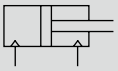

RoHS

Specifications

Item	SSD-KL4				
Bore size mm	ø40	ø50	ø63	ø80	ø100
Actuation	Double acting				
Working fluid	Compressed air				
Max. working pressure MPa	1.0 (≈150 psi, 10 bar)				
Min. working pressure MPa	0.1 (≈15 psi, 1 bar)		0.05 (≈7.3 psi, 0.5 bar)		
Proof pressure MPa	1.6 (≈230 psi, 16 bar)				
Ambient temperature °C	-10 (14°F) to 60 (140°F) (no freezing)				
Port size	Rc1/8	Rc1/4		Rc3/8	
Stroke tolerance mm	$^{+2}_{0}$				
Working piston speed mm/s	50 to 500		50 to 300		
Cushion	Rubber cushion				
Lubrication	Not required (use turbine oil class 1 ISO VG32 if necessary for lubrication)				
Allowable absorbed energy J	0.63	0.98	1.56	2.51	3.92

Stroke length

Bore size (mm)	Standard stroke length (mm)	Max. stroke length (mm)	Min. stroke length (mm)
ø40	20, 30, 40, 50, 60 70, 80, 90, 100	*2) 150	20
ø50			
ø63		*2) 200	
ø80			
ø100			

*1: The custom stroke length is available in 1mm increments. However, the total length is the same as that of the next longer standard stroke length.
*2: Stroke length over standard to maximum is available in increments of 10.
(Example) ø40: 110, 120, 130, 140, 150

Number of installed switches and min. stroke length (mm)

Switch quantity	1	2	3
Switch model No. / Bore size (mm)	V0		
ø40	20	20	35
ø50	20	20	35
ø63	20	20	35
ø80	20	20	35
ø100	20	20	35

Switch specifications

Item	Reed 2-wire	
	V0	
Applications	For relay, programmable controller	
Load voltage	12/24 VDC	110 VAC
Load current	5 to 50 mA	7 to 20 mA
Internal voltage drop	3.0 V or less (with 40 mA load current)	
Indicator lamp	LED (Lit when ON)	
Leakage current	0 mA	
Weight g	1 m:63 3 m:170 5 m:277	

Cylinder weight table (the weight of the switches is when there are 2 cylinder switches.)

(Unit: g)

Stroke length (mm) / Bore size (mm)	20	30	40	50	60	70	80	90	100
ø40	546	599	652	705	758	811	864	917	970
ø50	841	925	1009	1093	1177	1261	1345	1429	1513
ø63	1199	1309	1419	1529	1639	1749	1859	1969	2079
ø80	1995	2169	2343	2517	2691	2865	3039	3213	3387
ø100	2893	3120	3347	3574	3801	4028	4255	4482	4709

Theoretical thrust table

(Unit: N)

Bore size (mm)	Operating direction	Working pressure MPa											
		0.05	0.1	0.15	0.2	0.3	0.4	0.5	0.6	0.7	0.8	0.9	1.0
ø40	Push	-	1.26×10^2	1.88×10^2	2.51×10^2	3.77×10^2	5.03×10^2	6.28×10^2	7.54×10^2	8.80×10^2	1.01×10^3	1.13×10^3	1.26×10^3
	Pull	-	1.06×10^2	1.58×10^2	2.11×10^2	3.17×10^2	4.22×10^2	5.28×10^2	6.33×10^2	7.39×10^2	8.44×10^2	9.50×10^2	1.06×10^3
ø50	Push	-	1.96×10^2	2.95×10^2	3.93×10^2	5.89×10^2	7.85×10^2	9.82×10^2	1.18×10^3	1.37×10^3	1.57×10^3	1.77×10^3	1.96×10^3
	Pull	-	1.65×10^2	2.47×10^2	3.30×10^2	4.95×10^2	6.60×10^2	8.25×10^2	9.90×10^2	1.15×10^3	1.32×10^3	1.48×10^3	1.65×10^3
ø63	Push	1.56×10^2	3.12×10^2	4.68×10^2	6.23×10^2	9.35×10^2	1.25×10^3	1.56×10^3	1.87×10^3	2.18×10^3	2.49×10^3	2.81×10^3	3.12×10^3
	Pull	1.40×10^2	2.80×10^2	4.20×10^2	5.61×10^2	8.41×10^2	1.12×10^3	1.40×10^3	1.68×10^3	1.96×10^3	2.24×10^3	2.52×10^3	2.80×10^3
ø80	Push	2.51×10^2	5.03×10^2	7.54×10^2	1.01×10^3	1.51×10^3	2.01×10^3	2.51×10^3	3.02×10^3	3.52×10^3	4.02×10^3	4.52×10^3	5.03×10^3
	Pull	2.27×10^2	4.54×10^2	6.80×10^2	9.07×10^2	1.36×10^3	1.81×10^3	2.27×10^3	2.72×10^3	3.17×10^3	3.63×10^3	4.08×10^3	4.54×10^3
ø100	Push	3.93×10^2	7.85×10^2	1.18×10^3	1.57×10^3	2.36×10^3	3.14×10^3	3.93×10^3	4.71×10^3	5.50×10^3	6.28×10^3	7.07×10^3	7.85×10^3
	Pull	3.57×10^2	7.15×10^2	1.07×10^3	1.43×10^3	2.14×10^3	2.86×10^3	3.57×10^3	4.29×10^3	5.00×10^3	5.72×10^3	6.43×10^3	7.15×10^3

How to order

SSD-KL4 - 50 - 40 - V0 - D - N - LB - I

- Model No.
- Ⓐ Bore size
- Ⓑ Stroke length
- Ⓒ Switch model No. *4
- Ⓓ Switch quantity
- Ⓔ Option
- Ⓕ Mounting bracket *1 *2
- Ⓖ Accessory *3

Code	Description
Ⓐ Bore size (mm)	
40	ø40
50	ø50
63	ø63
80	ø80
100	ø100
Ⓑ Stroke length (mm)	
Refer to the stroke length table below.	

Ⓒ Switch model No.

Axial lead wire	Contact	Voltage AC	Voltage DC	Display	Lead wire
V0*	Reed	●	●	1-color display	2-wire

* Lead wire length	
Blank	1 m (standard)
3	3 m (option)
5	5 m (option)

Ⓓ Switch quantity	
R	1 on rod side
H	1 on head side
D	2
T	3

Ⓔ Option	
Blank	Rod end female thread
N	Rod end male thread

Ⓕ Mounting bracket	
LB	Axial foot
LB2	Axial foot (compact)
CB	Clevis bracket (pin and snap ring included)
CB2	Clevis bracket (compact) (pin and snap ring included)
FA	Rod side flange
FB	Head side flange

Ⓖ Accessory (available when rod end male thread "N" is selected)	
I	Rod eye
I2	Rod eye (compact)
Y	Rod clevis (pin and snap ring included)
Y2	Rod clevis (compact) (pin and snap ring included)

⚠ Precautions for model No. selection

*1 : The mounting bracket is included at shipment.
*2 : The projection dimension of piston rod WF when LB2 or FA is selected is different from that of the standard. Refer to the dimensions on pages 1109 and 1110. The number of the specified protruding dimension will be added at the end of the model No. printed on the metal plate on the body.
*3 : "I" and "Y" cannot be selected together.
*4 : Switches are shipped with the product. Contact CKD if assembling before shipment is necessary.

[Example of model No.]

SSD-KL4-50-40-V0-D-N-LB-I

Model: Compact cylinder double acting/one side high load/with strong magnetic field proof switch

- Ⓐ Bore size : ø50 mm
- Ⓑ Stroke length : 40 mm
- Ⓒ Switch model No. : Reed switch V0, lead wire length 1 m
- Ⓓ Switch quantity : 2
- Ⓔ Option : Rod end male thread
- Ⓕ Mounting bracket : Axial foot
- Ⓖ Accessory : Rod eye

[Stroke length table]

Stroke length (mm)		Applicable bore size ø40	ø50	ø63	ø80	ø100
Standard stroke length	20	●	●	●	●	●
	30	●	●	●	●	●
	40	●	●	●	●	●
	50	●	●	●	●	●
	60	●	●	●	●	●
	70	●	●	●	●	●
	80	●	●	●	●	●
	90	●	●	●	●	●
	100	●	●	●	●	●
Min. stroke length (mm) *1		20				
Max. stroke length (mm)		150		200		
Custom stroke length *2		In 1 mm increments				

*1 : Refer to page 1300 for the number of installed switches and the min. stroke length.
*2 : The total length is the same as that of the next longer standard stroke length.

How to order switch

SW - V0

Switch model No.
(Item Ⓒ on page 1302)

How to order mounting bracket

Bore size (mm) / Mounting bracket	ø40	ø50	ø63	ø80	ø100
Foot (LB)	SSD-LB-40	SSD-LB-50	SSD-LB-63	SSD-LB-80	SSD-LB-100
Foot (LB2)	SSD-LB2-40	SSD-LB2-50	SSD-LB2-63	SSD-LB2-80	SSD-LB2-100
Flange (FA/FB)	SSD-FA-40	SSD-FA-50	SSD-FA-63	SSD-FA-80	SSD-FA-100
Clevis bracket (CB)	SSD-CB-40	SSD-CB-50	SSD-CB-63	SSD-CB-80	SSD-CB-100
Clevis bracket (CB2)	SSD-CB2-40	SSD-CB2-50	SSD-CB2-63	SSD-CB2-80	SSD-CB2-100

*1: The foot mounting bracket is provided as 2 pcs./set.

Internal structure and parts list

● SSD-KL4-40

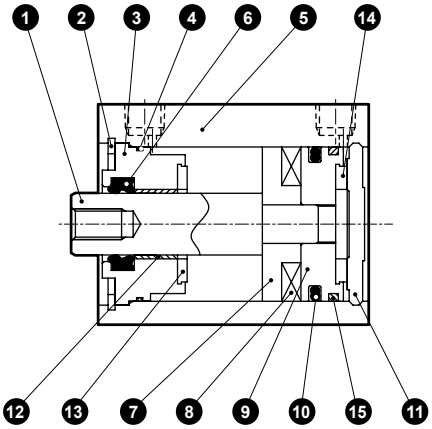

● SSD-KL4-50

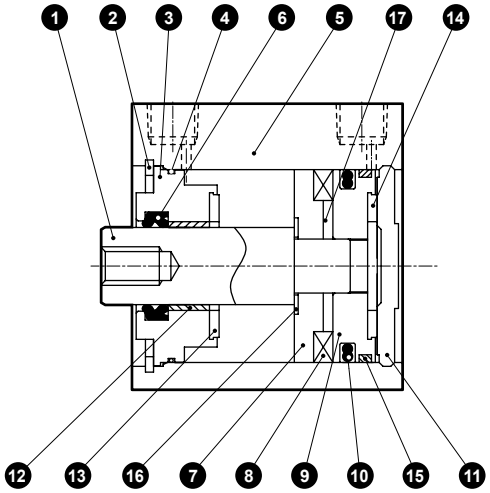

● SSD-KL4-63 to 100

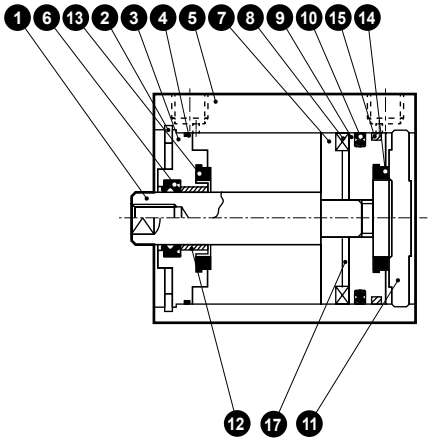

No.	Part name	Material	Remarks	No.	Part name	Material	Remarks
1	Piston rod	Steel	Industrial chrome plating	9	Piston	Aluminum alloy	
2	C type snap ring	Steel	Zinc phosphate	10	Piston packing	Nitrile rubber	
3	Rod metal	Aluminum alloy	Alumite	11	Cover	Aluminum alloy	Alumite
4	Rod metal gasket	Nitrile rubber		12	Bush	Oiles drymet	
5	Body	Aluminum alloy	Hard alumite	13	Cushion rubber R	Urethane rubber	
6	Rod packing	Nitrile rubber		14	Cushion rubber H	Urethane rubber	
7	Spacer	Aluminum alloy (resin for ø50 only)	Chromate	15	Wear ring	Polyacetal resin	
				16	Spacer washer	Stainless steel	ø50
8	Magnet	Plastic		17	Collar	Aluminum alloy	ø50 to ø100

Repair parts list

Bore size (mm)	Kit No.	Repair parts No.
ø40	SSD-K-40K	❹ ❻ ❿ ⓭ ⓮ ⓯
ø50	SSD-K-50K	
ø63	SSD-K-63K	
ø80	SSD-K-80K	
ø100	SSD-K-100K	

Dimensions

● SSD-KL4-40 to 100

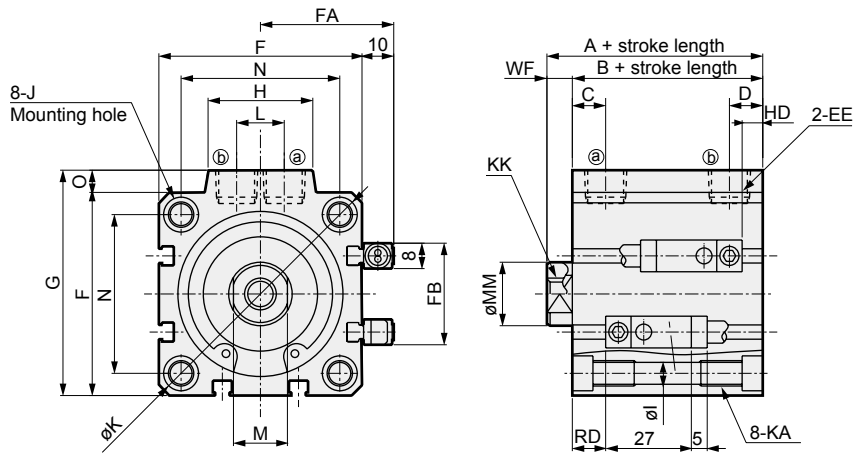

● Rod end male thread

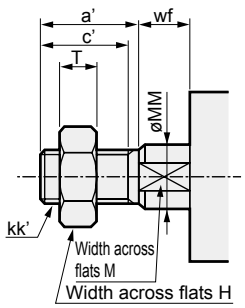

[Bore size ø100]

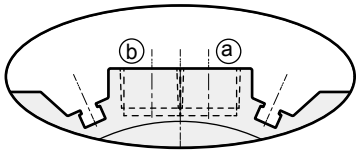

* Only for ø100, the port surface has switch grooves.

Code / Bore size	A	B	C	D	EE	F	FA	FB	G	H	I	J
ø40	66.5	59.5	12	8.5	Rc1/8	52	36	31	57	24	5.5	Spot face ø9, depth 5.5, ø5.5 through hole
ø50	68.5	60.5	10.5	10.5	Rc1/4	64	42	32	71	33	6.9	Spot face ø11, depth 6.5, ø6.9 through hole
ø63	74	66	13	11	Rc1/4	77	48.5	32	84	33	8.7	Spot face ø14, depth 9, ø8.7 through hole
ø80	83.5	73.5	16	13	Rc3/8	98	59	32	104	38	10.5	Spot face ø17.5, depth 11, ø10.5 through hole
ø100	95	83	23	15	Rc3/8	117	68.5	32	123.5	38	10.5	Spot face ø17.5, depth 11, ø10.5 through hole

Code / Bore size	K	KA	KK	L	M	MM	N	O	WF	HD	RD
ø40	69	M6 depth 11	M8 depth 13	10	14	16	40	5	7	10	20.5
ø50	86	M8 depth 13	M10 depth 15	15	17	20	50	7	8	11	20.5
ø63	103	M10 depth 25	M10 depth 15	15	17	20	60	7	8	18.5	18.5
ø80	132	M12 depth 28	M16 depth 21	15	22	25	77	6	10	23.5	21
ø100	156	M12 depth 28	M20 depth 27	15	27	30	94	6.5	12	29	25

*1: The A, B dimensions when using a custom stroke length are the same as those of when using the next longer standard stroke length.

● Dimensions of rod end male thread

Code / Bore size (mm)	a'	C'	H	kk'	M	MM	T	wf'
ø40	23.5	20.5	22	M14×1.5	14	16	8	5
ø50	28.5	26	27	M18×1.5	17	20	11	5
ø63	28.5	26	27	M18×1.5	17	20	11	5
ø80	35.5	32.5	32	M22×1.5	22	25	13	8
ø100	35.5	32.5	41	M26×1.5	27	30	16	8

* For dimensions of individual accessories, refer to pages 1108 to 1115.

Compact cylinder double acting/high load/with strong magnetic field proof switch/with coil scraper

SSD-KG1L4 Series

● Bore size: ø40/ø50/ø63/ø80/ø100

JIS symbol

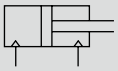

RoHS

Specifications

Item	SSD-KG1L4				
Bore size mm	ø40	ø50	ø63	ø80	ø100
Actuation	Double acting				
Working fluid	Compressed air				
Max. working pressure MPa	1.0 (≈150 psi, 10 bar)				
Min. working pressure MPa	0.15 (≈22 psi, 1.5 bar)		0.1 (≈15 psi, 1 bar)		
Proof pressure MPa	1.6 (≈230 psi, 16 bar)				
Ambient temperature °C	-10 (14°F) to 60 (140°F) (no freezing)				
Port size	Rc1/8	Rc1/4		Rc3/8	
Stroke tolerance mm	$^{+2.0}_{0}$				
Working piston speed mm/s	50 to 500		50 to 300		
Cushion	Rubber cushion				
Lubrication	Not required (use turbine oil class 1 ISO VG32 if necessary for lubrication)				
Allowable absorbed energy J	0.63	0.98	1.56	2.51	3.92

Stroke length

Bore size (mm)	Standard stroke length (mm)	Max. stroke length (mm)	Min. stroke length (mm)
ø40	20, 30, 40, 50, 60, 70, 80, 90, 100	*2) 150	20
ø50			
ø63		*2) 200	
ø80			
ø100			

*1: The custom stroke length is available in 1mm increments. However, the total length is the same as that of the next longer standard stroke length.
*2: Stroke length over standard to maximum is available in increments of 10.
(Example) ø40: 110, 120, 130, 140, 150

Number of installed switches and min. stroke length (mm)

Switch quantity	1	2	3
Switch model No. / Bore size (mm)	V0		
ø40	20	20	35
ø50	20	20	35
ø63	20	20	35
ø80	20	20	35
ø100	20	20	35

Switch specifications

Item	Reed 2-wire	
	VO	
Applications	For relay, programmable controller	
Load voltage	12/24 VDC	110 VAC
Load current	5 to 50 mA	7 to 20 mA
Internal voltage drop	3.0 V or less (with 40 mA load current)	
Indicator lamp	LED (Lit when ON)	
Leakage current	O mA	
Weight g	1 m:63 3 m:170 5 m:277	

Cylinder weight table (the weight of the switches is when there are 2 cylinder switches.)

(Unit: g)

Stroke length (mm) / Bore size (mm)	20	30	40	50	60	70	80	90	100
ø40	628	681	734	787	840	893	946	999	1052
ø50	960	1044	1128	1212	1296	1380	1464	1548	1632
ø63	1350	1461	1572	1683	1794	1905	2016	2127	2238
ø80	2247	2421	2595	2769	2943	3117	3291	3465	3639
ø100	3228	3455	3682	3909	4136	4363	4590	4817	5044

Theoretical thrust table

(Unit: N)

Bore size (mm)	Operating direction	Working pressure MPa										
		0.1	0.15	0.2	0.3	0.4	0.5	0.6	0.7	0.8	0.9	1.0
ø40	Push	-	1.88×10^2	2.51×10^2	3.77×10^2	5.03×10^2	6.28×10^2	7.54×10^2	8.80×10^2	1.01×10^3	1.13×10^3	1.26×10^3
	Pull	-	1.58×10^2	2.11×10^2	3.17×10^2	4.22×10^2	5.28×10^2	6.33×10^2	7.39×10^2	8.44×10^2	9.50×10^2	1.06×10^3
ø50	Push	-	2.95×10^2	3.93×10^2	5.89×10^2	7.85×10^2	9.82×10^2	1.18×10^3	1.37×10^3	1.57×10^3	1.77×10^3	1.96×10^3
	Pull	-	2.47×10^2	3.30×10^2	4.95×10^2	6.60×10^2	8.25×10^2	9.90×10^2	1.15×10^3	1.32×10^3	1.48×10^3	1.65×10^3
ø63	Push	3.12×10^2	4.68×10^2	6.23×10^2	9.35×10^2	1.25×10^3	1.56×10^3	1.87×10^3	2.18×10^3	2.49×10^3	2.81×10^3	3.12×10^3
	Pull	2.80×10^2	4.20×10^2	5.61×10^2	8.41×10^2	1.12×10^3	1.40×10^3	1.68×10^3	1.96×10^3	2.24×10^3	2.52×10^3	2.80×10^3
ø80	Push	5.03×10^2	7.54×10^2	1.01×10^3	1.51×10^3	2.01×10^3	2.51×10^3	3.02×10^3	3.52×10^3	4.02×10^3	4.52×10^3	5.03×10^3
	Pull	4.54×10^2	6.80×10^2	9.07×10^2	1.36×10^3	1.81×10^3	2.27×10^3	2.72×10^3	3.17×10^3	3.63×10^3	4.08×10^3	4.54×10^3
ø100	Push	7.85×10^2	1.18×10^3	1.57×10^3	2.36×10^3	3.14×10^3	3.93×10^3	4.71×10^3	5.50×10^3	6.28×10^3	7.07×10^3	7.85×10^3
	Pull	7.15×10^2	1.07×10^3	1.43×10^3	2.14×10^3	2.86×10^3	3.57×10^3	4.29×10^3	5.00×10^3	5.72×10^3	6.43×10^3	7.15×10^3

How to order

SSD-KG1L4 - 50 - 40 - V0 - D - N - LB - I

- Model No.
- Ⓐ Bore size
- Ⓑ Stroke length
- Ⓒ Switch model No. *4
- Ⓓ Switch quantity
- Ⓔ Option
- Ⓕ Mounting bracket *1 *2
- Ⓖ Accessory *3

Code	Description
Ⓐ Bore size (mm)	
40	ø40
50	ø50
63	ø63
80	ø80
100	ø100

Ⓑ Stroke length (mm)

Refer to the stroke length table below.

Ⓒ Switch model No.

Axial lead wire	Contact	Voltage AC	Voltage DC	Display	Lead wire
V0*	Reed	●	●	1-color display	2-wire

* Lead wire length	
Blank	1 m (standard)
3	3 m (option)
5	5 m (option)

Ⓓ Switch quantity

R	1 on rod side
H	1 on head side
D	2
T	3

Ⓔ Option

Blank	Rod end female thread
N	Rod end male thread

Ⓕ Mounting bracket

LB	Axial foot
LB2	Axial foot (compact)
CB	Clevis bracket (pin and snap ring included)
CB2	Clevis bracket (compact) (pin and snap ring included)
FA	Rod side flange
FB	Head side flange

Ⓖ Accessory (available when rod end male thread "N" is selected)

I	Rod eye
I2	Rod eye (compact)
Y	Rod clevis (pin and snap ring included)
Y2	Rod clevis (compact) (pin and snap ring included)

⚠ Precautions for model No. selection

*1 : The mounting bracket is included at shipment.
*2 : The projection dimension of piston rod WF when LB2 or FA is selected is different from that of the standard. Refer to the dimensions on pages 1109 and 1110. The number of the specified protruding dimension will be added at the end of the model No. printed on the metal plate on the body.
*3 : "I" and "Y" cannot be selected together.
*4 : Switches are shipped with the product. Contact CKD if assembling before shipment is necessary.

[Example of model No.]

SSD-KG1L4-50-40-V0-D-N-LB-I

Model: Compact cylinder double acting/high load/with coil scraper/with strong magnetic field proof switch

- Ⓐ Bore size : ø50 mm
- Ⓑ Stroke length : 40 mm
- Ⓒ Switch model No. : Reed switch V0, lead wire length 1 m
- Ⓓ Switch quantity : 2
- Ⓔ Option : Rod end male thread
- Ⓕ Mounting bracket : Axial foot
- Ⓖ Accessory : Rod eye

[Stroke length table]

Stroke length (mm)		Applicable bore size ø40	ø50	ø63	ø80	ø100
Standard stroke length	20	●	●	●	●	●
	30	●	●	●	●	●
	40	●	●	●	●	●
	50	●	●	●	●	●
	60	●	●	●	●	●
	70	●	●	●	●	●
	80	●	●	●	●	●
	90	●	●	●	●	●
	100	●	●	●	●	●
Min. stroke length (mm) *1		20				
Max. stroke length (mm)		150		200		
Custom stroke length *2		In 1 mm increments				

*1 : Refer to page 1306 for the number of installed switches and the min. stroke length.
*2 : The total length is the same as that of the next longer standard stroke length.

How to order switch

SW - V0

Switch model No.
(Item Ⓒ on page 1308)

How to order mounting bracket

Bore size (mm) / Mounting bracket	ø40	ø50	ø63	ø80	ø100
Foot (LB)	SSD-LB-40	SSD-LB-50	SSD-LB-63	SSD-LB-80	SSD-LB-100
Foot (LB2)	SSD-LB2-40	SSD-LB2-50	SSD-LB2-63	SSD-LB2-80	SSD-LB2-100
Flange (FA/FB)	SSD-FA-40	SSD-FA-50	SSD-FA-63	SSD-FA-80	SSD-FA-100
Clevis bracket (CB)	SSD-CB-40	SSD-CB-50	SSD-CB-63	SSD-CB-80	SSD-CB-100
Clevis bracket (CB2)	SSD-CB2-40	SSD-CB2-50	SSD-CB2-63	SSD-CB2-80	SSD-CB2-100

*1: The foot mounting bracket is provided as 2 pcs./set.

Internal structure and parts list

● SSD-KG1L4-40

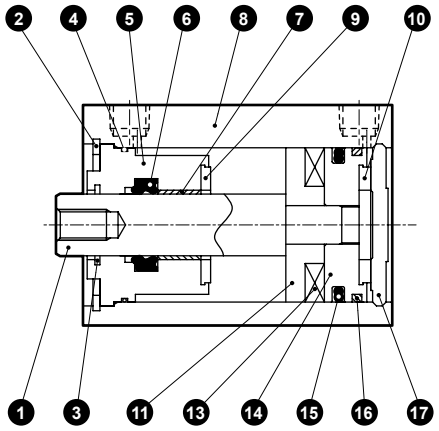

● SSD-KG1L4-50

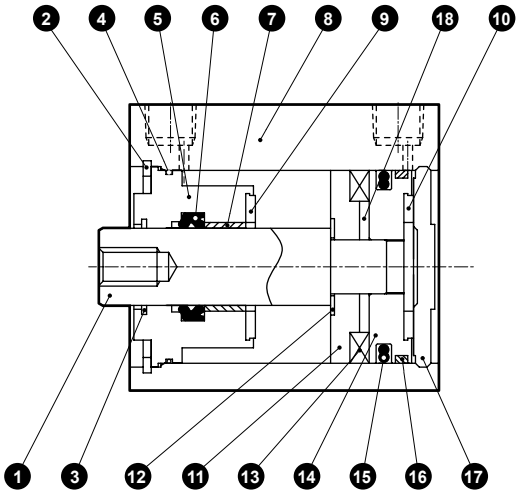

● SSD-KG1L4-63 to 100

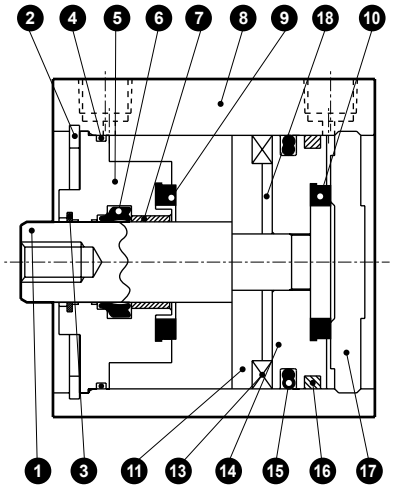

No.	Part name	Material	Remarks
1	Piston rod	Steel	Industrial chrome plating
2	C type snap ring for hole	Steel	Zinc phosphate
3	Coil scraper	Phosphor bronze	
4	Rod metal gasket	Nitrile rubber	
5	Rod metal	Aluminum alloy	Chromate
6	Rod packing	Nitrile rubber	
7	Bush	Oiles drymet	
8	Tube body	Aluminum alloy	Hard alumite
9	Cushion rubber R	Urethane rubber	
10	Cushion rubber H	Urethane rubber	

No.	Part name	Material	Remarks
11	Spacer	Aluminum alloy (resin for ø50 only)	Chromate
12	Spacer washer	Stainless steel	ø50
13	Magnet	Plastic	
14	Piston	Aluminum alloy	Chromate
15	Piston packing	Nitrile rubber	
16	Wear ring	Polyacetal resin	
17	Cover	Aluminum alloy	Chromate
18	Collar	Aluminum alloy	ø50 to ø100

Repair parts list

Part name / Bore size (mm)	Kit No.	Repair parts No.
ø40	SSD-KG1-40K	❸ ❹ ❻ ❾ ❿ ⓯ ⓰
ø50	SSD-KG1-50K	
ø63	SSD-KG1-63K	
ø80	SSD-KG1-80K	
ø100	SSD-KG1-100K	

Dimensions

● SSD-KG1L4-40 to 100

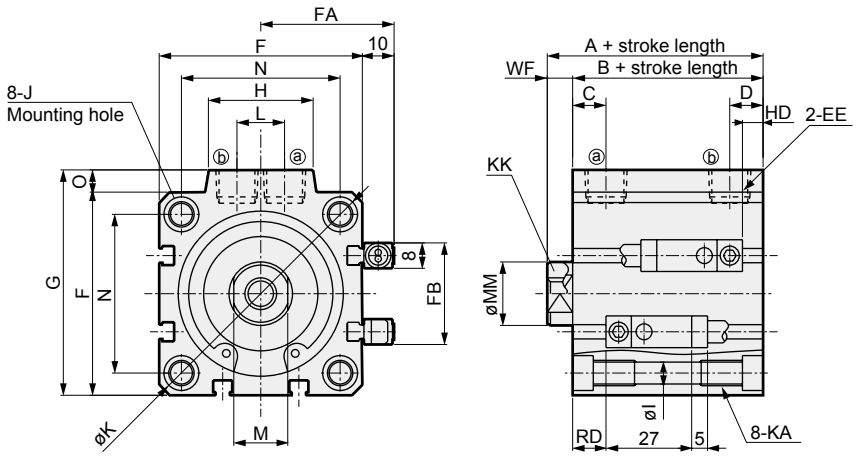

● Rod end male thread

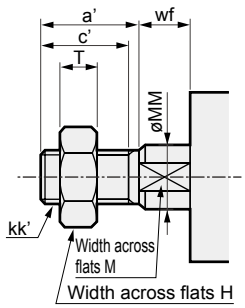

[Bore size ø100]

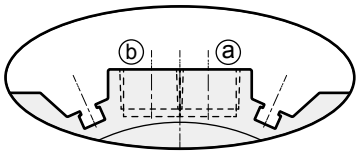

* Only for ø100, the port surface has switch grooves.

Code / Bore size	A	B	C	D	EE	F	FA	FB	G	H	I	J
ø40	76.5	69.5	12	8.5	Rc1/8	52	36	31	57	24	5.5	Spot face ø9, depth 5.5, ø5.5 through hole
ø50	78.5	70.5	10.5	10.5	Rc1/4	64	42	32	71	33	6.9	Spot face ø11, depth 6.5, ø6.9 through hole
ø63	84	76	13	11	Rc1/4	77	48.5	32	84	33	8.7	Spot face ø14, depth 9, ø8.7 through hole
ø80	93.5	83.5	16	13	Rc3/8	98	59	32	104	38	10.5	Spot face ø17.5, depth 11, ø10.5 through hole
ø100	105	93	23	15	Rc3/8	117	68.5	32	123.5	38	10.5	Spot face ø17.5, depth 11, ø10.5 through hole

Code / Bore size	K	KA	KK	L	M	MM	N	O	WF	HD	RD
ø40	69	M6 depth 11	M8 depth 13	10	14	16	40	5	7	10	30.5
ø50	86	M8 depth 13	M10 depth 15	15	17	20	50	7	8	11	30.5
ø63	103	M10 depth 25	M10 depth 15	15	17	20	60	7	8	18.5	28.5
ø80	132	M12 depth 28	M16 depth 21	15	22	25	77	6	10	23.5	31
ø100	156	M12 depth 28	M20 depth 27	15	27	30	94	6.5	12	29	35

*1: The A, B dimensions when using a custom stroke length are the same as those of when using the next longer standard stroke length.

● Dimensions of rod end male thread

Code / Bore size (mm)	a'	C'	H	kk'	M	MM	T	wf'
ø40	23.5	20.5	22	M14×1.5	14	16	8	5
ø50	28.5	26	27	M18×1.5	17	20	11	5
ø63	28.5	26	27	M18×1.5	17	20	11	5
ø80	35.5	32.5	32	M22×1.5	22	25	13	8
ø100	35.5	32.5	41	M26×1.5	27	30	16	8

* For dimensions of individual accessories, refer to pages 1108 to 1115.

SCP*3
CMK2
CMA2
SCM
SCG
SCA2
SCS2
CKV2
CAV2/COVP/N2
SSD2
SSG
SSD
CAT
MDC2
MVC
SMG
MSD/MSDG
FC*
STK
SRL3
SRG3
SRM3
SRT3
MRL2
MRG2
SM-25
ShkAbs
FJ
FK
Spd Contr
Ending

SSD Series common dimensions (2-color display, off-delay, for AC magnetic field, with T1* switch)

● SSD-*L1-12, 16 (2-color display, off-delay, T2Y$^{H}/_{V}$, T3Y$^{H}/_{V}$, T2J$^{H}/_{V}$)
SSD-*L-20, 25 (2-color display, off-delay, T2Y$^{H}/_{V}$, T3Y$^{H}/_{V}$, T2J$^{H}/_{V}$)

ø12/ø16

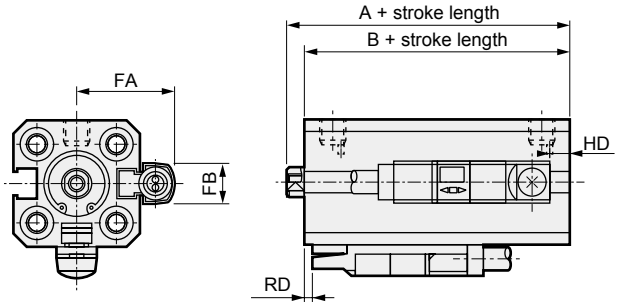

ø20/ø25

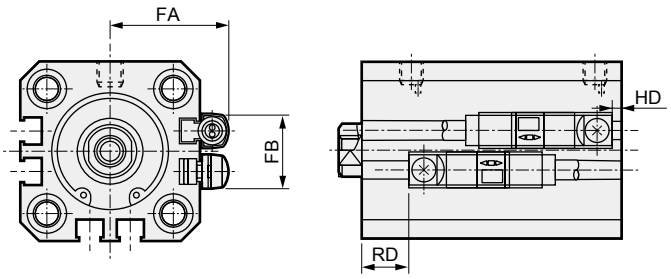

Code / Bore size (mm)	FA	FB	T2Y$^{H}/_{V}$, T3Y$^{H}/_{V}$, T2J$^{H}/_{V}$		SSD-*L1 SSD-XL1 SSD-OL1		SSD-YL1		SSD-ML1	
			RD	HD	A	B	A	B	A	B
ø12	18.8	8	2.5	4.5	30.5	27	40.5	37	35.5	32
ø16	20.8	8	2.5	4.5	30.5	27	40.5	27	35.5	32
ø20	24.3	16	5	1.5	-	-	-	-	-	-
ø25	26.3	17	8	1.5	-	-	-	-	-	-

● SSD*-L1-12, 16 (T1* with switch T1$^{H}/_{V}$)
SSD-L-20, 25 (for AC magnetic field, with T1* switch, T2YD, T2YDT, T1$^{H}/_{V}$)

ø12/ø16

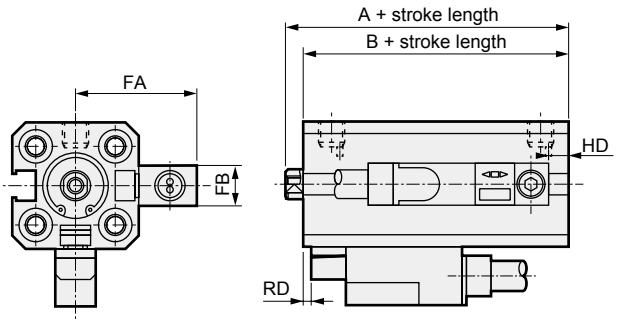

ø20/ø25

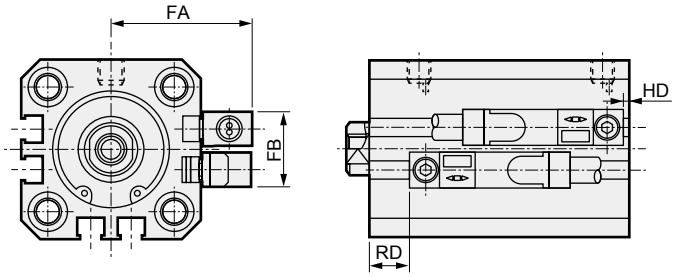

Code / Bore size (mm)	FA	FB	RD	HD	SSD-*L1 SSD-XL1 SSD-OL1		SSD-YL1		SSD-ML1	
					A	B	A	B	A	B
ø12	23.8	8	2.5	4.5	30.5	27	40.5	37	35.5	32
ø16	25.8	8	2.5	4.5	30.5	27	40.5	27	35.5	32
ø20	29.3	16	5	1.5	-	-	-	-	-	-
ø25	31.3	17	8	1.5	-	-	-	-	-	-

SSD Series common dimensions (with 2-color display, off-delay, AC magnetic field, T1* and T8* switches)

● SSD-*L-32 to 160 (2-color display, off-delay, T8* with switch T2Y$^{H}/_{V}$, T3Y$^{H}/_{V}$, T2J$^{H}/_{V}$, T8$^{H}/_{V}$)

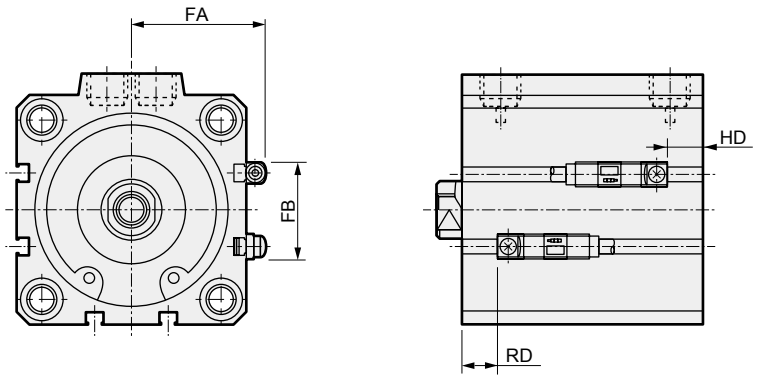

Code / Bore size (mm)	FA	FB	T2Y$^{H}/_{V}$, T3Y$^{H}/_{V}$, T2J$^{H}/_{V}$		T8$^{H}/_{V}$		
			RD	HD	RD	HD	
ø32	28.8	24	7.5	2	-	-	
ø40	32.3	31	10.5	5.5	6	1	
ø50	38.3	32	11	6	6.5	1.5	
ø63	44.8	32	11.5	11	7	6.5	
ø80	55.3	32	14	16	9.5	11.5	
ø100	64.8	32	18	21.5	13.5	17	
ø125	77.5	48	28	23	23.5	18.5	
ø140	85.5	48	31.5	29.5	27	25	
ø160	95.5	52	37.5	32.5	33	28	

● SSD-*L-32 to 160 (for AC magnetic field, with T1* switch, T2YD, T2YDT, T1$^{H}/_{V}$)

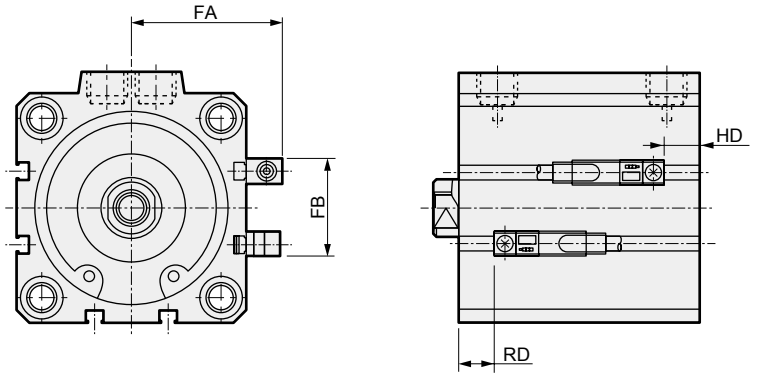

Code / Bore size (mm)	FA	FB	RD	HD	
ø32	33.8	24	7.5	2	
ø40	37.3	31	10.5	5.5	
ø50	43.3	32	11	6	
ø63	49.8	32	11.5	11	
ø80	60.3	32	14	16	
ø100	69.8	32	18	21.5	
ø125	82.5	48	28	23	
ø140	90.5	48	31.5	29.5	
ø160	100.5	52	37.5	32.5	

SCP*3
CMK2
CMA2
SCM
SCG
SCA2
SCS2
CKV2
CAV2/COVP/N2
SSD2
SSG
SSD
CAT
MDC2
MVC
SMG
MSD/MSDG
FC*
STK
SRL3
SRG3
SRM3
SRT3
MRL2
MRG2
SM-25
ShkAbs
FJ
FK
Spd Contr
Ending

SSD-K Series common dimensions (with 2-color display, off-delay, AC magnetic field, T1* and T8* switches)

● SSD-KL(1)-12 to 25 (2-color display, off-delay, T8* with switch T2Y$^{H}/_{V}$, T3Y$^{H}/_{V}$, T2J$^{H}/_{V}$, T8$^{H}/_{V}$)

ø12/ø16

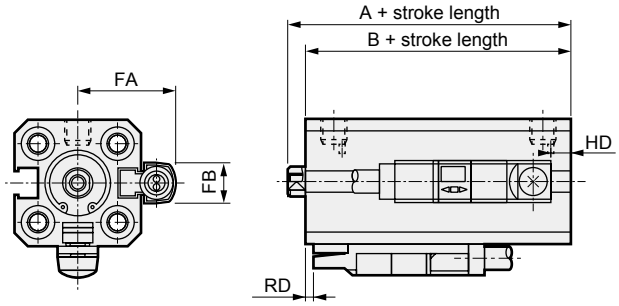

ø20/ø25

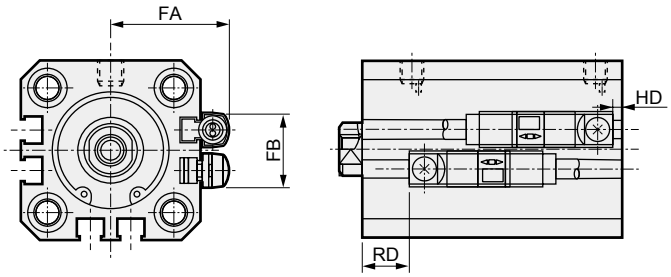

Code / Bore size (mm)	FA	FB	T2Y$^{H}/_{V}$, T3Y$^{H}/_{V}$, T2J$^{H}/_{V}$		T8$^{H}/_{V}$		
			RD *1	HD *1	RD	HD	
ø12	18.8	8	4.5	1	—	—	
ø16	20.8	8	4	1.5	—	—	
ø20	24.3	16	8.5(13.5)	4.5(11)	2.5(7.5)	0(6.5)	
ø25	26.3	17	12(17)	4(12.5)	6(11)	0(8)	

*1: When longer than ø20: 100 mm stroke length or ø25: 150 mm stroke length, HD and RD dimensions are indicated in ( ).

● SSD-KL(1)-12 to 25 (for AC magnetic field, with T1* switch, T2YD, T2YDT, T1$^{H}/_{V}$)

ø12/ø16

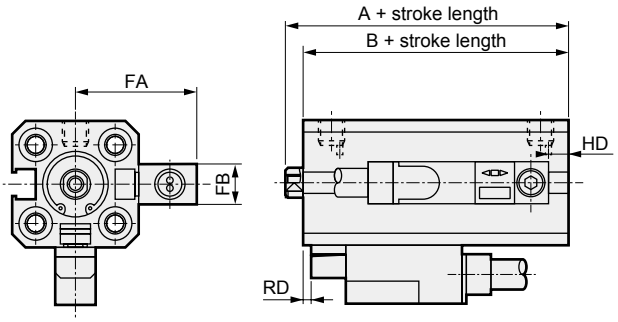

ø20/ø25

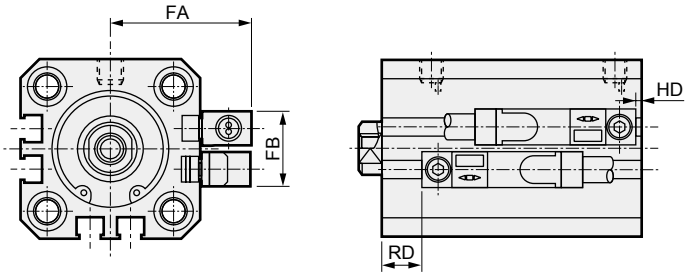

Code / Bore size (mm)	FA	FB	RD *1	HD *1	
ø12	23.8	8	4.5	1	
ø16	25.8	8	4	1.5	
ø20	29.3	16	8.5(13.5)	4.5(11)	
ø25	31.3	17	12(17)	4(12.5)	

*1: When longer than ø20: 100 mm stroke length or ø25: 150 mm stroke length, HD and RD dimensions are indicated in ( ).

SSD-K Series common dimensions (with 2-color display, off-delay, AC magnetic field, T1* and T8* switches)

● SSD-KL-32 to 100 (2-color display, off-delay, T8* with switch T2Y$^{H}/_{V}$, T3Y$^{H}/_{V}$, T2J$^{H}/_{V}$, T8$^{H}/_{V}$)

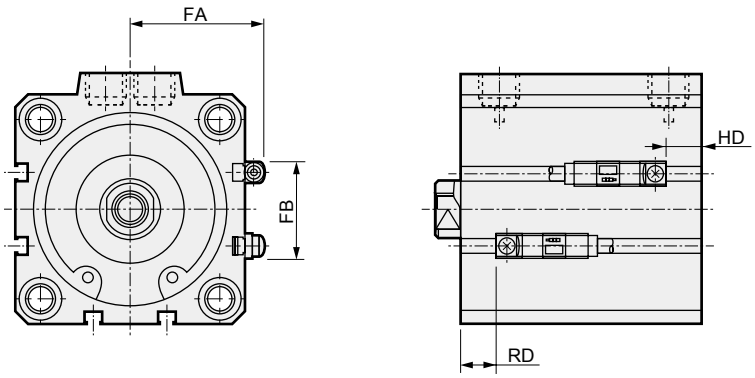

Code / Bore size (mm)	FA	FB	T2Y$^{H}/_{V}$, T3Y$^{H}/_{V}$, T2J$^{H}/_{V}$		T8$^{H}/_{V}$		
			RD *1	HD *1	RD	HD	
ø32	28.8	24	12.5(12.5)	7(14.5)	8(8)	3.5(10)	
ø40	32.3	31	18(18)	8(17.5)	13.5(13.5)	3.5(13)	
ø50	38.3	32	18.5(23.5)	8.5(17.5)	14(19)	4(13)	
ø63	44.8	32	16.5(21.5)	16(21.5)	12(17)	11.5(17)	
ø80	55.3	32	19(24)	20.5(26.5)	14.5(19.5)	16(22)	
ø100	64.8	32	23(28)	26.5(32)	18.5(23.5)	22(27.5)	

*1: When longer than ø32 to 50: 150 mm stroke or ø63 to 100: 200 mm stroke, HD and RD dimensions are indicated in ( ).

● SSD-KL-32 to 100 (for AC magnetic field, with T1* switch, T2YD, T2YDT, T1$^{H}/_{V}$)

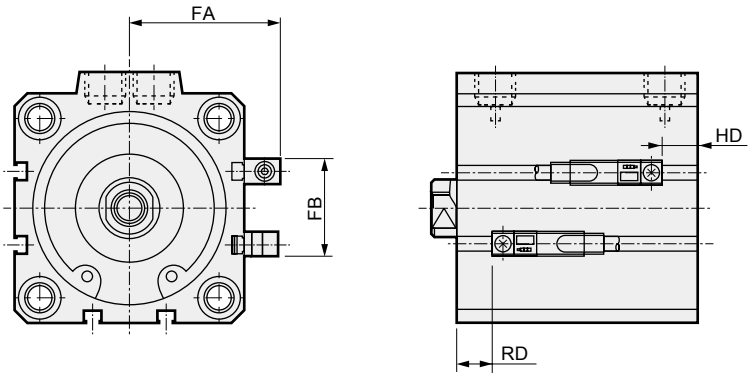

Code / Bore size (mm)	FA	FB	RD *1	HD *1	
ø32	33.8	24	12.5(12.5)	7(14.5)	
ø40	37.3	31	18(18)	8(17.5)	
ø50	43.3	32	18.5(23.5)	8.5(17.5)	
ø63	49.8	32	16.5(21.5)	16(21.5)	
ø80	60.3	32	19(24)	20.5(26.5)	
ø100	69.8	32	23(28)	26.5(32)	

*1: When longer than ø32 to 50: 150 mm stroke or ø63 to 100: 200 mm stroke, HD and RD dimensions are indicated in ( ).

SCP*3
CMK2
CMA2
SCM
SCG
SCA2
SCS2
CKV2
CAV2/COVP/N2
SSD2
SSG
SSD
CAT
MDC2
MVC
SMG
MSD/MSDG
FC*
STK
SRL3
SRG3
SRM3
SRT3
MRL2
MRG2
SM-25
ShkAbs
FJ
FK
Spd Contr
Ending

SSD-WL Series common dimensions (with 2-color display, off-delay, AC magnetic field, T1* and T8* switches)

● SSD-WL-12 to 25 (2-color display, off-delay, T8* with switch/T2Y$^{H}/_{V}$, T3Y$^{H}/_{V}$, T2J$^{H}/_{V}$, T8$^{H}/_{V}$)

ø12/ø16

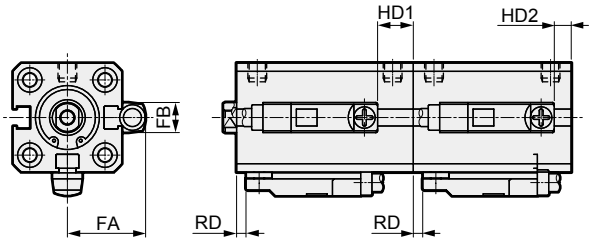

ø20/ø25

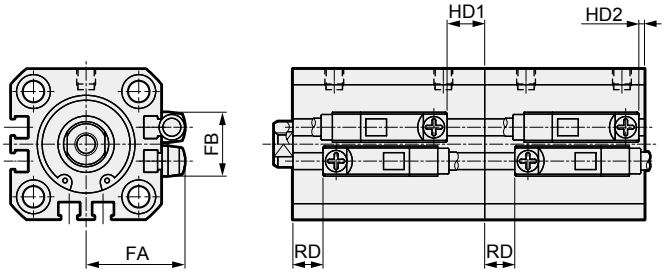

Code / Bore size (mm)	FA	FB	T2Y$^{H}/_{V}$, T3Y$^{H}/_{V}$, T2J$^{H}/_{V}$			T8$^{H}/_{V}$			
			RD	HD1	HD2	RD	HD1	HD2	
ø12	18.8	8	2.5	9.5	4.5	-	-	-	
ø16	20.8	8	2.5	9.5	4.5	-	-	-	
ø20	24.3	16	5	8	1.5	-	-	-	
ø25	26.3	17	8	10	1.5	-	-	-	

● SSD-WL-12 to 25 (for AC magnetic field, with T1* switch, T2YD, T2YDT, T1$^{H}/_{V}$)

ø12/ø16

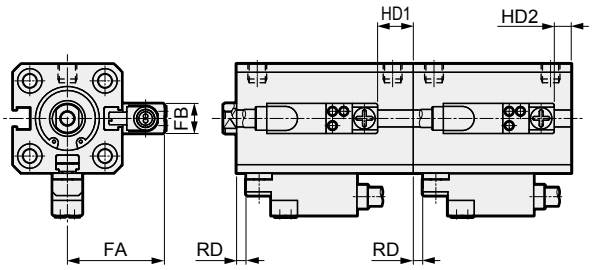

ø20/ø25

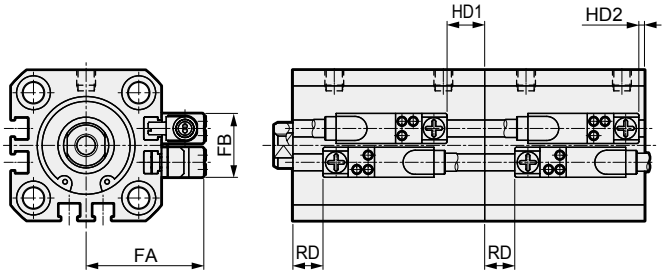

Code / Bore size (mm)	FA	FB	RD	HD1	HD2	
ø12	23.8	8	2.5	9.5	4.5	
ø16	25.8	8	2.5	9.5	4.5	
ø20	29.3	16	5	8	1.5	
ø25	31.3	17	8	10	1.5	

SSD-W Series common dimensions (with 2-color display, off-delay, AC magnetic field, T1* and T8* switches)

● SSD-WL-32 to 100 (2-color display, off-delay, T8* with switch T2Y$^{H}/_{V}$, T3Y$^{H}/_{V}$, T2J$^{H}/_{V}$, T8$^{H}/_{V}$)

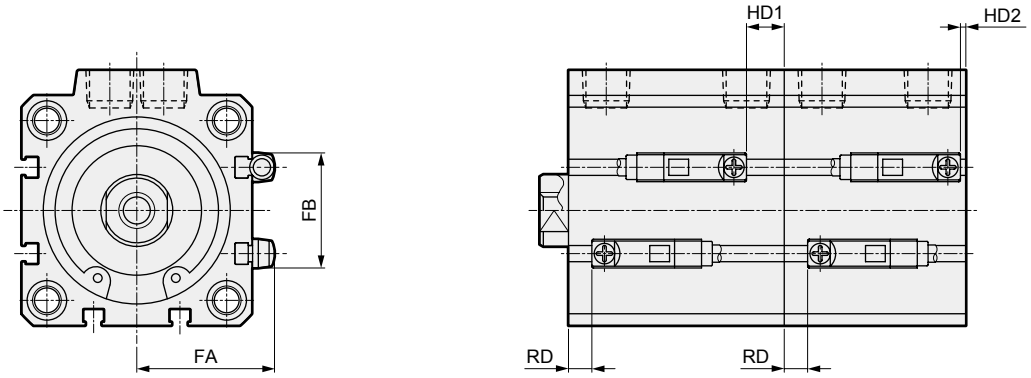

Code / Bore size (mm)	FA	FB	T2Y$^{H}/_{V}$, T3Y$^{H}/_{V}$, T2J$^{H}/_{V}$			T8$^{H}/_{V}$			
			RD	HD1	HD2	RD	HD1	HD2	
ø32	28.8	24	7.5	9.5	2	-	-	-	
ø40	32.3	31	10.5	15	5.5	6	10.5	1	
ø50	38.3	32	11	15	6	6.5	10.5	1.5	
ø63	44.8	32	11.5	16.5	11	7	12	6.5	
ø80	55.3	32	14	21.5	16	9.5	17	11.5	
ø100	64.8	32	18	27	21.5	13.5	12.5	7	

● SSD-WL-32 to 100 (for AC magnetic field, with T1* switch, T2YD, T2YDT, T1$^{H}/_{V}$)

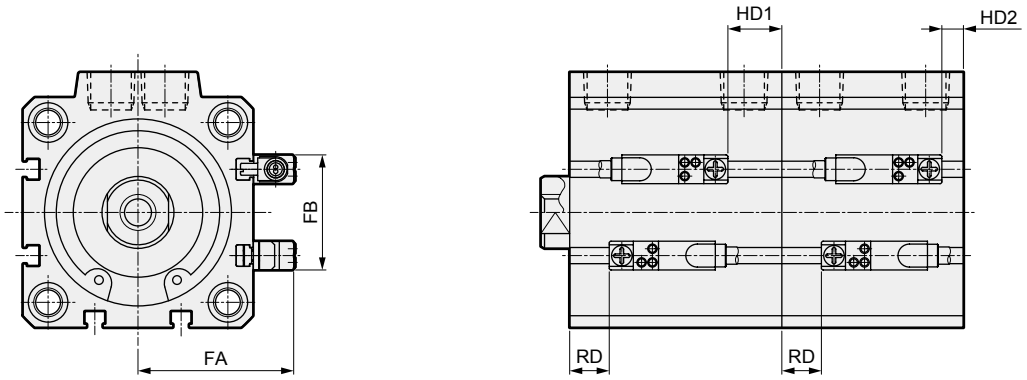

Code / Bore size (mm)	FA	FB	RD	HD1	HD2	
ø32	33.8	24	7.5	9.5	2	
ø40	37.3	31	10.5	15	5.5	
ø50	43.3	32	11	15	6	
ø63	49.8	32	11.5	16.5	11	
ø80	60.3	32	14	21.5	16	
ø100	69.8	32	18	27	21.5	

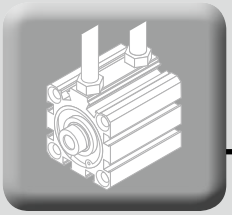

Introduction to made-to-order products

Cylinder switch can be mounted from 4 surfaces!

- Series: All SSD Series
- Corresponding bore size: 25 to ø80 (ø100 or more is 4 surface mounting as standard.)

How to order

Contact CKD for model No.

Dimensions

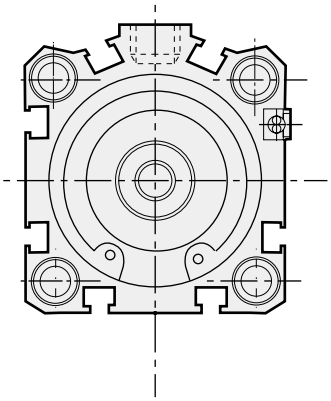

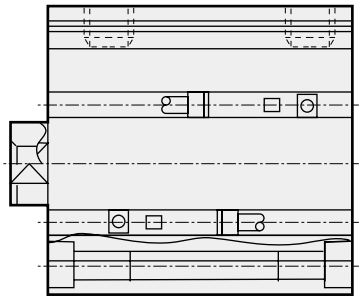

MEMO

SCP*3
CMK2
CMA2
SCM
SCG
SCA2
SCS2
CKV2
CAV2/COVP/N2
SSD2
SSG
SSD
CAT
MDC2
MVC
SMG
MSD/MSDG
FC*
STK
SRL3
SRG3
SRM3
SRT3
MRL2
MRG2
SM-25
ShkAbs
FJ
FK
Spd Contr
Ending

Dimensions with accessories (Mounting bracket: LB)

● ø12 to ø32

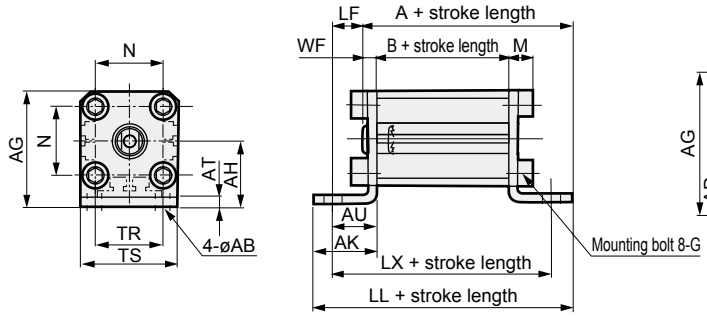

● ø40 to ø100

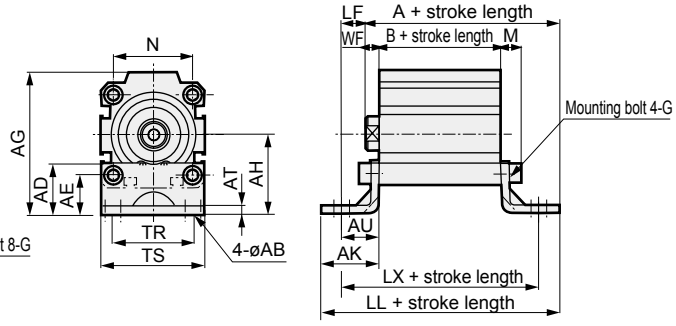

Rod end male thread

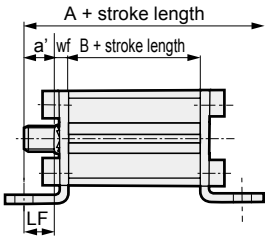

Rod end male thread

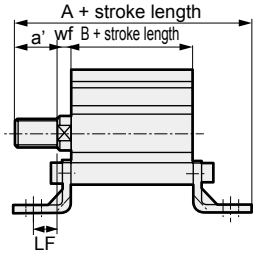

SSD (double acting/single rod), SSD-T (heat resistance), SSD-F (fine speed), SSD-O (low speed) dimensions table

Code / Bore size (mm)	Common dimensions													Female thread												Male thread											
																Without switch				With switch *1								Without switch				With switch *1					
	AB	AD	AE	AG	AH	AK	AT	AU	G	N	TR	TS	M	WF	LF	A	B	LL	LX	A	B	LL	LX	a'	wf	LF	A	B	LL	LX	A	B	LL	LX		
ø12	6	-	-	29.5	17	18	2.3	12	M4×12	15.5	16	25	6.3	3.5	8.5	38.5	17	53	41	43.5	22	58	46	10.5	3.5	8.5	49	17	53	41	54	22	58	46		
ø16	6	-	-	33.5	19	18	2.3	12	M4×12	20	16	29	6.3	3.5	8.5	38.5	17	53	41	43.5	22	58	46	12	3.5	8.5	50.5	17	53	41	55.5	22	58	46		
ø20	7	-	-	42	24	24	3.2	16	M6×16	25.5	24	36	9.2	4.5	11.5	48	19.5	67.5	51.5	58	29.5	77.5	61.5	14	4.5	11.5	62	19.5	67.5	51.5	72	29.5	77.5	61.5		
ø25	7	-	-	46	26	24	3.2	16	M6×16	28	28	40	9.2	5	11	51.5	22.5	70.5	54.5	61.5	32.5	80.5	64.5	17.5	5	11	69	22.5	70.5	54.5	79	32.5	80.5	64.5		
ø32	7	-	-	53.5	31	24	3.2	16	M6×16	34	34	45	9.2	7	9	54	23	71	55	64	33	81	65	23.5	5	11	75.5	23	71	55	85.5	33	81	65		
ø40	7	26	20	71	40	29	4.5	19	M6×16	40	40	52	10	7	12	65.5	29.5	87.5	67.5	75.5	39.5	97.5	77.5	23.5	5	14	87	29.5	87.5	67.5	97	39.5	97.5	77.5		
ø50	9	23	15	79	40	34	4.5	22	M8×20	50	46	64	13	8	14	72.5	30.5	98.5	74.5	82.5	40.5	108.5	84.5	28.5	5	17	98	30.5	98.5	74.5	108	40.5	108.5	84.5		
ø63	11	33	21	96.5	51	40	4.5	25	M10×25	60	60	77	15	8	17	84	36	116	86	94	46	126	96	28.5	5	20	109.5	36	116	86	119.5	46	126	96		
ø80	13	42	23	116.5	61.5	50	6	35	M12×40	77	77	98	18	10	25	103.5	43.5	143.5	113.5	113.5	53.5	153.5	123.5	35.5	8	27	137	43.5	143.5	113.5	147	53.5	153.5	123.5		
ø100	13	48	22	134	69	50	6	35	M12×40	94	94	117	18	12	23	115	53	153	123	125	63	163	133	35.5	8	27	146.5	53	153	123	156.5	63	163	133		

*2: LB cannot be selected when B + stroke length is at or less than the stroke value below.
ø20: 27 or less; ø63: 42 or less; ø80, ø100: 69 or less
The same applies to variations not listed on this page.

*1: When the stroke length with switch is 5 mm, dimensions are as below.

Bore size	Female thread				Male thread			
	A	B	LL	LX	A	B	LL	LX
ø12	48.5	27	63	51	59	27	63	51
ø16	48.5	27	63	51	60.5	27	63	51

SSD-K (double acting/high load), SSD-K-*C (rubber-air cushioned), SSD-KF (high load/fine speed), SSD-KU (low friction) dimensions table

Code / Bore size (mm)	Common dimensions													For female thread *1												For male thread *1											
																Without switch				With switch *2								Without switch				With switch *2					
	AB	AD	AE	AG	AH	AK	AT	AU	G	N	TR	TS	M	WF	LF	A	B	LL	LX	A	B	LL	LX	a'	wf	LF	A	B	LL	LX	A	B	LL	LX		
ø12	6	-	-	29.5	17	18	2.3	12	M4×12	15.5	16	25	6.3	3.5	8.5	43.5	22	58	46	48.5	27	63	51	10.5	3.5	8.5	54	22	58	46	59	27	63	51		
ø16	6	-	-	33.5	19	18	2.3	12	M4×12	20	16	29	6.3	3.5	8.5	43.5	22	58	46	48.5	27	63	51	12	3.5	8.5	55.5	22	58	46	60.5	27	63	51		
ø20	7	-	-	42	24	24	3.2	16	M6×16	25.5	24	36	9.2	4.5	11.5	53	24.5	72.5	56.5	63	34.5	82.5	66.5	14	4.5	11.5	67	24.5	72.5	56.5	77	34.5	82.5	66.5		
ø25	7	-	-	46	26	24	3.2	16	M6×16	28	28	40	9.2	5	11	56.5	27.5	75.5	59.5	66.5	37.5	85.5	69.5	17.5	5	11	74	27.5	75.5	59.5	84	37.5	85.5	69.5		
ø32	7	-	-	53.5	31	24	3.2	16	M6×16	34	34	45	9.2	7	9	64	33	81	65	74	43	91	75	23.5	5	11	85.5	33	81	65	95.5	43	91	75		
ø40	7	28	20	71	40	29	4	19	M6×16	40	40	52	10	7	12	75.5	39.5	97.5	77.5	85.5	49.5	107.5	87.5	23.5	5	14	97	39.5	97.5	77.5	107	49.5	107.5	87.5		
ø50	9	25	15	79	40	34	5	22	M8×20	50	46	64	13	8	14	82.5	40.5	108.5	84.5	92.5	50.5	118.5	94.5	28.5	5	17	108	40.5	108.5	84.5	118	50.5	118.5	94.5		
ø63	11	40	21	96.5	51	40	5	25	M10×25	60	60	77	15	8	17	94	46	126	96	104	56	136	106	28.5	5	20	119.5	46	126	96	129.5	56	136	106		
ø80	13	47	23	116.5	61.5	50	6	35	M12×40	77	77	98	18	10	25	113.5	53.5	153.5	123.5	123.5	63.5	163.5	133.5	35.5	8	27	147	53.5	153.5	123.5	157	63.5	163.5	133.5		
ø100	13	50	22	134	69	50	6	35	M12×40	94	94	117	18	12	23	125	63	163	133	135	73	173	143	35.5	8	27	156.5	63	163	133	166.5	73	173	143		

*1: For the long stroke length, dimensions are as below.

Code / Bore size (mm)		Female thread								Male thread							
		Without switch				With switch				Without switch				With switch *2			
		A	B	LL	LX	A	B	LL	LX	A	B	LL	LX	A	B	LL	LX
ø20	Over 100 st	64.5	36	84	68	74.5	46	94	78	78.5	36	84	68	88.5	46	94	78
ø25	Over 150 st	70	41	89	73	80	51	99	83	87.5	41	89	73	97.5	51	99	83
ø32		71.5	40.5	88.5	72.5	81.5	50.5	98.5	82.5	93	40.5	88.5	72.5	103	50.5	98.5	82.5
ø40		85	49	107	87	95	59	117	97	106.5	49	107	87	116.5	59	117	97
ø50		96	54	122	98	106	64	132	108	121.5	54	122	98	131.5	64	132	108
ø63	Over 200 st	104	56	136	106	114	66	146	116	129.5	56	136	106	139.5	66	146	116
ø80		123.5	63.5	163.5	133.5	133.5	73.5	173.5	143.5	157	63.5	163.5	133.5	167	73.5	173.5	143.5
ø100		135	73	173	143	145	83	183	153	166.5	73	173	143	176.5	83	183	153

*2: When the stroke length with switch is 5 mm, dimensions are as below.

Bore size	Female thread				Male thread			
	A	B	LL	LX	A	B	LL	LX
ø12	53.5	32	68	56	64	32	68	56
ø16	53.5	32	68	56	65.5	32	68	56

*3: LB cannot be selected when B + stroke length is at or less than the stroke value below.
ø63: 69 or less
The same applies to variations not listed on this page.

Dimensions with accessories (Mounting bracket: LB2)

● ø12 to ø25

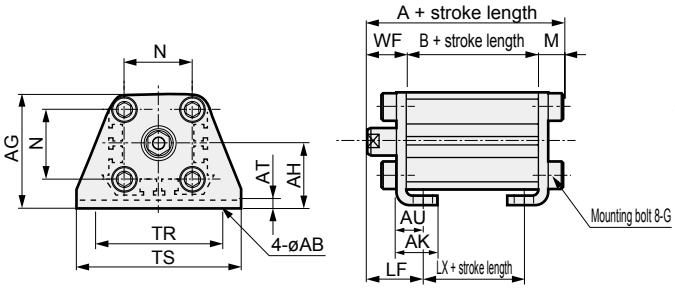

Rod end male thread

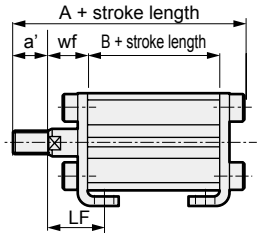

● ø32 to ø100

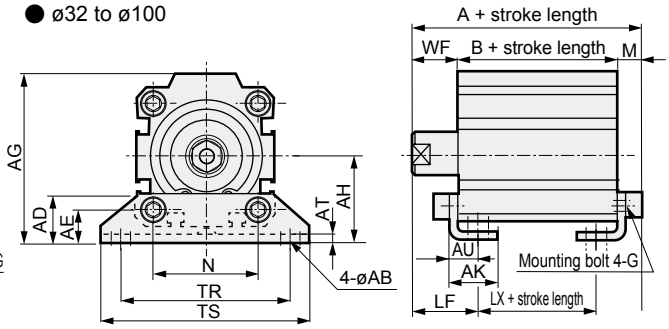

Rod end male thread

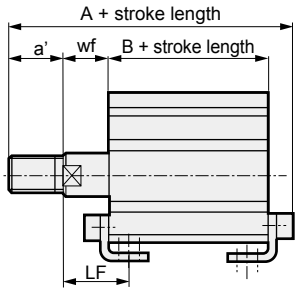

SSD (double acting/single rod), SSD-T (heat resistance), SSD-F (fine speed), SSD-0 (low speed) dimensions table

Code / Bore size (mm)	Common dimensions													Female thread									Male thread								
	AB	AD	AE	AG	AH	AK	AT	AU	G	N	TR	TS	M	WF	LF	Without switch			With switch *1			a'	wf	LF	Without switch			With switch *1		
																A	B	LX	A	B	LX				A	B	LX	A	B	LX
ø12	5	-	-	29.5	17	12.5	2	8	M4×10	15.5	34	44	6	13.5	19.5	36.5	17	5	41.5	22	10	10.5	13.5	19.5	47	17	5	52	22	10
ø16	5	-	-	33.5	19	13	2	8	M4×10	20	38	48	6	13.5	19.5	36.5	17	5	41.5	22	10	12	13.5	19.5	48.5	17	5	53.5	22	10
ø20	7	-	-	42	24	15	3.2	9.2	M6×16	25.5	48	62	9.2	14.5	20.5	43.2	19.5	7.5	53.2	29.5	17.5	14	14.5	20.5	57.2	19.5	7.5	67.2	29.5	17.5
ø25	7	-	-	46	26	16.5	3.2	10.7	M6×16	28	52	66	9.2	15	22.5	46.7	22.5	7.5	56.7	32.5	17.5	17.5	15	22.5	64.2	22.5	7.5	74.2	32.5	17.5
ø32	7	18.5	13	57	30	17	3.2	11.2	M6×16	34	57	71	9.2	17	25	49.2	23	7	59.2	33	17	23.5	15	23	70.7	23	7	80.7	33	17
ø40	7	18	13	64	33	18.2	3.2	11.2	M6×16	40	64	78	9.2	17	25	55.7	29.5	13.5	65.7	39.5	23.5	23.5	15	23	77.2	29.5	13.5	87.2	39.5	23.5
ø50	9	22	14	78	39	22.7	3.2	14.7	M8×20	50	79	95	11.2	18	29.5	59.7	30.5	7.5	69.7	40.5	17.5	28.5	15	26.5	85.2	30.5	7.5	95.2	40.5	17.5
ø63	11	26	16	91.5	46	25.2	3.2	16.2	M10×25	60	95	113	13.2	18	31	67.2	36	10	77.2	46	20	28.5	15	28	92.7	36	10	102.7	46	20
ø80	13	31.5	20.5	114	59	30.5	4.5	19.5	M12×40	77	118	140	16.5	20	35	80	43.5	13.5	90	53.5	23.5	35.5	18	33	113.5	43.5	13.5	123.5	53.5	23.5
ø100	13	35	24	136	71	35.5	6	23	M12×40	94	137	162	18	22	39	93	53	19	103	63	29	35.5	18	35	124.5	53	19	134.5	63	29

*2: LB2 cannot be selected when B + stroke length is at or less than the value below.
ø20: 27 or less; ø63: 45 or less; ø80: 72 or less; ø100: 69 or less
The same applies to variations not listed on this page.

*1: When the stroke length with switch is 5 mm, dimensions are as below.

Bore size	Female thread			Male thread		
	A	B	LX	A	B	LX
ø12	46.5	27	15	57	27	15
ø16	46.5	27	15	58.5	27	15

SSD-K (double acting/high load), SSD-K-*C (rubber-air cushioned), SSD-KF (high load/fine speed), SSD-KU (low friction) dimensions table

Code / Bore size (mm)	Common dimensions													For female thread *1									For male thread *1								
	AB	AD	AE	AG	AH	AK	AT	AU	G	N	TR	TS	M	WF	LF	Without switch			With switch *2			a'	wf	LF	Without switch			With switch *2		
																A	B	LX	A	B	LX				A	B	LX	A	B	LX
ø12	5	-	-	29.5	17	12.5	2	8	M4×10	15.5	34	44	6	13.5	19.5	41.5	22	10	46.5	27	15	10.5	13.5	19.5	52	22	10	57	27	15
ø16	5	-	-	33.5	19	13	2	8	M4×10	20	38	48	6	13.5	19.5	41.5	22	10	46.5	27	15	12	13.5	19.5	53.5	22	10	58.5	27	15
ø20	7	-	-	42	24	15	3.2	9.2	M6×16	25.5	48	62	9.2	14.5	20.5	48.2	24.5	12.5	58.2	34.5	22.5	14	14.5	20.5	62.2	24.5	12.5	72.2	34.5	22.5
ø25	7	-	-	46	26	16.5	3.2	10.7	M6×16	28	52	66	9.2	15	22.5	51.7	27.5	12.5	61.7	37.5	22.5	17.5	15	22.5	69.2	27.5	12.5	79.2	37.5	22.5
ø32	7	18.5	13	57	30	17	3.2	11.2	M6×16	34	57	71	9.2	17	25	59.2	33	17	69.2	43	27	23.5	15	23	80.7	33	17	90.7	43	27
ø40	7	18	13	64	33	18.2	3.2	11.2	M6×16	40	64	78	9.2	17	25	65.7	39.5	23.5	75.7	49.5	33.5	23.5	15	23	87.2	39.5	23.5	97.2	49.5	33.5
ø50	9	22	14	78	39	22.7	3.2	14.7	M8×20	50	79	95	11.2	18	29.5	69.7	40.5	17.5	79.7	50.5	27.5	28.5	15	26.5	95.2	40.5	17.5	105.2	50.5	27.5
ø63	11	28	16	91.5	46	25.2	3.2	16.2	M10×25	60	95	113	13.2	18	31	77.2	46	20	87.2	56	30	28.5	15	28	102.7	46	20	112.7	56	30
ø80	13	39.5	20.5	114	59	30.5	4.5	19.5	M12×40	77	118	140	16.5	20	35	90	53.5	23.5	100	63.5	33.5	35.5	18	33	123.5	53.5	23.5	133.5	63.5	33.5
ø100	13	50	24	136	71	35.5	6	23	M12×40	94	137	162	18	22	39	103	63	29	113	73	39	35.5	18	35	134.5	63	29	144.5	73	39

*1: For the long stroke length, dimensions are as below.

Code / Bore size (mm)		Female thread						Male thread					
		Without switch			With switch			Without switch			With switch		
		A	B	LX	A	B	LX	A	B	LX	A	B	LX
ø20	Over 100 st	59.7	36	24	69.7	46	34	73.7	36	24	83.7	46	34
ø25	Over 150 st	65.2	41	26	75.2	51	36	82.7	41	26	92.7	51	36
ø32		66.7	40.5	24.5	76.7	50.5	34.5	88.2	40.5	24.5	98.2	50.5	34.5
ø40		75.2	49	33	85.2	59	43	96.7	49	33	106.7	59	43
ø50		83.2	54	31	93.2	64	41	108.7	54	31	118.7	64	41
ø63	Over 200 st	87.2	56	30	97.2	66	40	112.7	56	30	122.7	66	40
ø80		100	63.5	33.5	110	73.5	43.5	133.5	63.5	33.5	143.5	73.5	43.5
ø100		113	73	39	123	83	49	144.5	73	39	154.5	83	49

*2: When the stroke length with switch is 5 mm, dimensions are as below.

Bore size	Female thread			Male thread		
	A	B	LX	A	B	LX
ø12	51.5	32	20	62	32	20
ø16	51.5	32	20	63.5	32	20

*3: LB2 cannot be selected when B + stroke length is at or less than the value below.
ø80: 72 or less
The same applies to variations not listed on this page.

Note: The WF/wf dimension of the cylinder for LB2 is set 10 mm longer than that of standard products. Contact CKD for the cylinder model No. when ordering individual cylinders and LB2 brackets.

SCP*3
CMK2
CMA2
SCM
SCG
SCA2
SCS2
CKV2
CAV2/COVP/N2
SSD2
SSG
SSD
CAT
MDC2
MVC
SMG
MSD/MSDG
FC*
STK
SRL3
SRG3
SRM3
SRT3
MRL2
MRG2
SM-25
ShkAbs
FJ
FK
Spd Contr
Ending

Dimensions with accessories (Mounting bracket: FA)

● ø12 to ø25

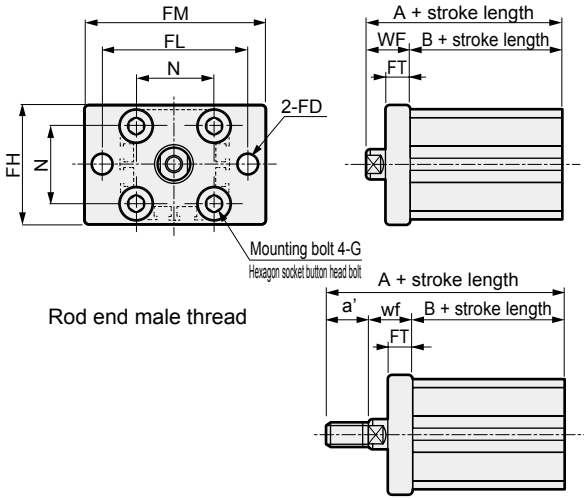

● ø32 to ø100

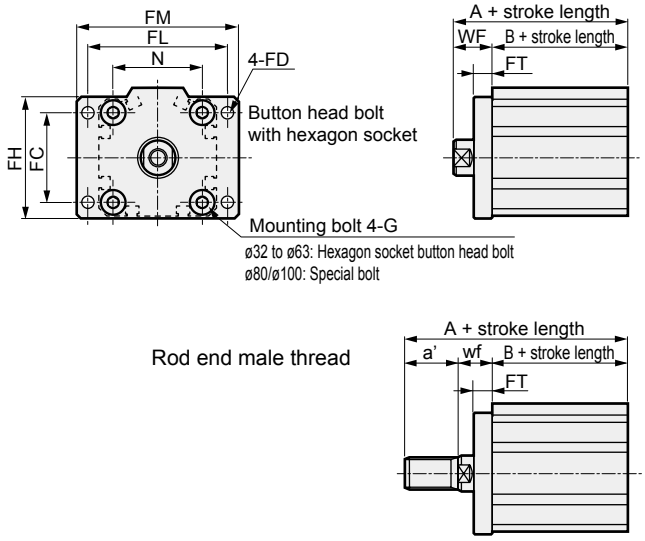

SSD (double acting/single rod), SSD-T (heat resistance), SSD-F (fine speed), SSD-0 (low speed) dimensions table

Code / Bore size (mm)	Common dimensions								Female thread					Male thread					
	FC	FD	FH	FL	FM	FT	N	G	WF	Without switch		With switch *1		a'	wf	Without switch		With switch *1	
										A	B	A	B			A	B	A	B
ø12	-	4.5	25	45	55	5.5	15.5	M4×12	13.5	30.5	17	35.5	22	10.5	13.5	41	17	46	22
ø16	-	4.5	30	45	55	5.5	20	M4×12	13.5	30.5	17	35.5	22	12	13.5	42.5	17	47.5	22
ø20	-	6.6	39	48	60	8	25.5	M6×16	14.5	34	19.5	44	29.5	14	14.5	48	19.5	58	29.5
ø25	-	6.6	42	52	64	8	28	M6×16	15	37.5	22.5	47.5	32.5	17.5	15	55	22.5	65	32.5
ø32	34	5.5	48	56	65	8	34	M6×16	17	40	23	50	33	23.5	15	61.5	23	71.5	33
ø40	40	5.5	54	62	72	8	40	M6×16	17	46.5	29.5	56.5	39.5	23.5	15	68	29.5	78	39.5
ø50	50	6.6	67	76	89	9	50	M8×20	18	48.5	30.5	58.5	40.5	28.5	15	74	30.5	84	40.5
ø63	60	9	80	92	108	9	60	M10×25	18	54	36	64	46	28.5	15	79.5	36	89.5	46
ø80	77	11	99	116	134	11	77	M12×40	20	63.5	43.5	73.5	53.5	35.5	18	97	43.5	107	53.5
ø100	94	11	117	136	154	11	94	M12×40	22	75	53	85	63	35.5	18	106.5	53	116.5	63

*1: When the stroke length with switch is 5 mm, dimensions are as below.

Bore size	Female thread		Male thread	
	A	B	A	B
ø12	40.5	27	51	27
ø16	40.5	27	52.5	27

SSD-K (double acting/high load), SSD-K-*C (rubber-air cushioned), SSD-KF (high load/fine speed), SSD-KU (low friction) dimensions table

Code / Bore size (mm)	Common dimensions								For female thread *1					For male thread *1					
	FC	FD	FH	FL	FM	FT	N	G	WF	Without switch		With switch *2		a'	wf	Without switch		With switch *2	
										A	B	A	B			A	B	A	B
ø12	-	4.5	25	45	55	5.5	15.5	M4×12	13.5	35.5	22	40.5	27	10.5	13.5	46	22	51	27
ø16	-	4.5	30	45	55	5.5	20	M4×12	13.5	35.5	22	40.5	27	12	13.5	47.5	22	52.5	27
ø20	-	6.6	39	48	60	8	25.5	M6×16	14.5	39	24.5	49	34.5	14	14.5	53	24.5	63	34.5
ø25	-	6.6	42	52	64	8	28	M6×16	15	42.5	27.5	52.5	37.5	17.5	15	60	27.5	70	37.5
ø32	34	5.5	48	56	65	8	34	M6×16	17	50	33	60	43	23.5	15	71.5	33	81.5	43
ø40	40	5.5	54	62	72	8	40	M6×16	17	56.5	39.5	66.5	49.5	23.5	15	78	39.5	88	49.5
ø50	50	6.6	67	76	89	9	50	M8×20	18	58.5	40.5	68.5	50.5	28.5	15	84	40.5	94	50.5
ø63	60	9	80	92	108	9	60	M10×25	18	64	46	74	56	28.5	15	89.5	46	99.5	56
ø80	77	11	99	116	134	11	77	M12×40	20	73.5	53.5	83.5	63.5	35.5	18	107	53.5	117	63.5
ø100	94	11	117	136	154	11	94	M12×40	22	85	63	95	73	35.5	18	116.5	63	126.5	73

*1: For the long stroke length, dimensions are as below.

Code / Bore size (mm)		Female thread				Male thread			
		Without switch		With switch		Without switch		With switch	
		A	B	A	B	A	B	A	B
ø20	Over 100 st	50.5	36	60.5	46	64.5	36	74.5	46
ø25	Over 150 st	56	41	66	51	73.5	41	83.5	51
ø32		57.5	40.5	67.5	50.5	79	40.5	89	50.5
ø40		66	49	76	59	87.5	49	97.5	59
ø50		72	54	82	64	97.5	54	107.5	64
ø63	Over 200 st	74	56	84	66	99.5	56	109.5	66
ø80		83.5	63.5	93.5	73.5	117	63.5	127	73.5
ø100		95	73	105	83	126.5	73	136.5	83

*2: When the stroke length with switch is 5 mm, dimensions are as below.

Bore size	Female thread		Male thread	
	A	B	A	B
ø12	45.5	32	56	32
ø16	45.5	32	57.5	32

Note: The WF/wf dimension of the cylinder for FA is set 10 mm longer than that of standard products. Contact CKD for the cylinder model No. when ordering individual cylinders and FA brackets.

Dimensions with accessories (Mounting bracket: FB)

● ø12 to ø25

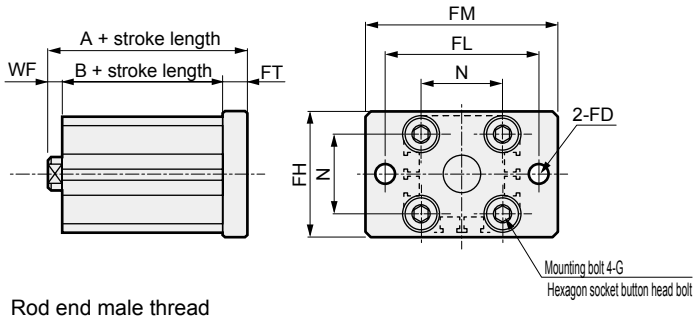

Rod end male thread

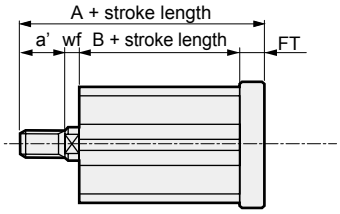

● ø32 to ø100

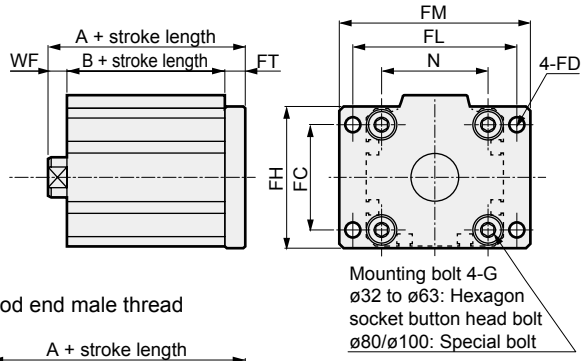

Rod end male thread

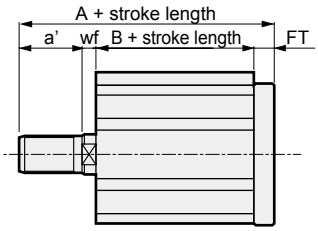

SSD (double acting/single rod), SSD-T (heat resistance), SSD-F (fine speed), SSD-0 (low speed) dimensions table

Code / Bore size (mm)	Common dimensions								Female thread					Male thread					
	FC	FD	FH	FL	FM	FT	N	G	WF	Without switch		With switch *1		a'	wf	Without switch		With switch *1	
										A	B	A	B			A	B	A	B
ø12	-	4.5	25	45	55	5.5	15.5	M4×12	3.5	26	17	31	22	10.5	3.5	36.5	17	41.5	22
ø16	-	4.5	30	45	55	5.5	20	M4×12	3.5	26	17	31	22	12	3.5	38	17	43	22
ø20	-	6.6	39	48	60	8	25.5	M6×16	4.5	32	19.5	42	29.5	14	4.5	46	19.5	56	29.5
ø25	-	6.6	42	52	64	8	28	M6×16	5	35.5	22.5	45.5	32.5	17.5	5	53	22.5	63	32.5
ø32	34	5.5	48	56	65	8	34	M6×16	7	38	23	48	33	23.5	5	59.5	23	69.5	33
ø40	40	5.5	54	62	72	8	40	M6×16	7	44.5	29.5	54.5	39.5	23.5	5	66	29.5	76	39.5
ø50	50	6.6	67	76	89	9	50	M8×20	8	47.5	30.5	57.5	40.5	28.5	5	73	30.5	83	40.5
ø63	60	9	80	92	108	9	60	M10×25	8	53	36	63	46	28.5	5	78.5	36	88.5	46
ø80	77	11	99	116	134	11	77	M12×40	10	64.5	43.5	74.5	53.5	35.5	8	98	43.5	108	53.5
ø100	94	11	117	136	154	11	94	M12×40	12	76	53	86	63	35.5	8	107.5	53	117.5	63

*1: When the stroke length with switch is 5 mm, dimensions are as below.

Bore size	Female thread		Male thread	
	A	B	A	B
ø12	36	27	46.5	27
ø16	36	27	48	27

SSD-K (double acting/high load), SSD-K-*C (rubber-air cushioned), SSD-KF (high load/fine speed), SSD-KU (low friction) dimensions table

Code / Bore size (mm)	Common dimensions								For female thread *1					For male thread *1					
	FC	FD	FH	FL	FM	FT	N	G	WF	Without switch		With switch *2		a'	wf	Without switch		With switch *2	
										A	B	A	B			A	B	A	B
ø12	-	4.5	25	45	55	5.5	15.5	M4×12	3.5	31	22	36	27	10.5	3.5	41.5	22	46.5	27
ø16	-	4.5	30	45	55	5.5	20	M4×12	3.5	31	22	36	27	12	3.5	43	22	48	27
ø20	-	6.6	39	48	60	8	25.5	M6×16	4.5	37	24.5	47	34.5	14	4.5	51	24.5	61	34.5
ø25	-	6.6	42	52	64	8	28	M6×16	5	40.5	27.5	50.5	37.5	17.5	5	58	27.5	68	37.5
ø32	34	5.5	48	56	65	8	34	M6×16	7	48	33	58	43	23.5	5	69.5	33	79.5	43
ø40	40	5.5	54	62	72	8	40	M6×16	7	54.5	39.5	64.5	49.5	23.5	5	76	39.5	86	49.5
ø50	50	6.6	67	76	89	9	50	M8×20	8	57.5	40.5	67.5	50.5	28.5	5	83	40.5	93	50.5
ø63	60	9	80	92	108	9	60	M10×25	8	63	46	73	56	28.5	5	88.5	46	98.5	56
ø80	77	11	99	116	134	11	77	M12×40	10	74.5	53.5	84.5	63.5	35.5	8	108	53.5	118	63.5
ø100	94	11	117	136	154	11	94	M12×40	12	86	63	96	73	35.5	8	117.5	63	127.5	73

*1: For the long stroke length, dimensions are as below.

Code / Bore size (mm)		Female thread				Male thread			
		Without switch		With switch		Without switch		With switch	
		A	B	A	B	A	B	A	B
ø20	Over 100 st	48.5	36	58.5	46	62.5	36	72.5	46
ø25	Over 150 st	54	41	64	51	71.5	41	81.5	51
ø32		55.5	40.5	65.5	50.5	77	40.5	87	50.5
ø40		64	49	74	59	85.5	49	95.5	59
ø50		71	54	81	64	96.5	54	106.5	64
ø63	Over 200 st	73	56	83	66	98.5	56	108.5	66
ø80		84.5	63.5	94.5	73.5	118	63.5	128	73.5
ø100		96	73	106	83	127.5	73	137.5	83

*2: When the stroke length with switch is 5 mm, dimensions are as below.

Bore size	Female thread		Male thread	
	A	B	A	B
ø12	41	32	51.5	32
ø16	41	32	53	32

Dimensions with accessories (Mounting bracket: CB)

CAD

● ø12 to ø25

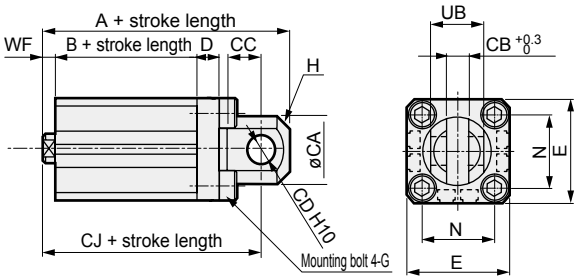

Rod end male thread

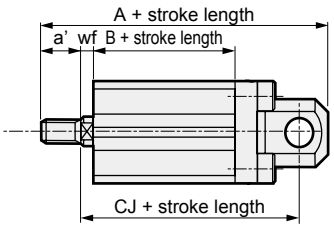

● ø32 to ø100

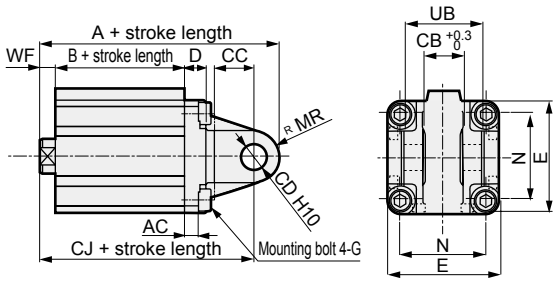

Rod end male thread

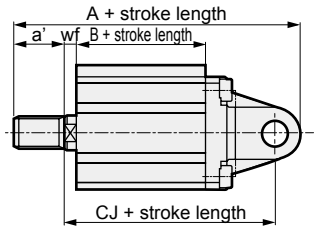

SSD (double acting/single rod), SSD-T (heat resistance), SSD-F (fine speed), SSD-0 (low speed) dimensions table

Code / Bore size (mm)	Common dimensions												Female thread							Male thread							
	AC	CA	CB	CC	CD	D	E	G	H	MR	N	UB	WF	Without switch			With switch *1			a'	wf	Without switch			With switch *1		
														A	B	CJ	A	B	CJ			A	B	CJ	A	B	CJ
ø12	-	13.5	6.6	7	5	5	25	M4×12	C1.5	-	15.5	12 -0.1 -0.4	3.5	40.5	17	34.5	45.5	22	39.5	10.5	3.5	51	17	34.5	56	22	39.5
ø16	-	15	6.6	8	5	5	29	M4×12	C2	-	20	12 -0.1 -0.4	3.5	41.5	17	35.5	46.5	22	40.5	12	3.5	53.5	17	35.5	58.5	22	40.5
ø20	-	24	8.1	12	10	8	36	M6×20	C4	-	25.5	19 -0.1 -0.4	4.5	57	19.5	47	67	29.5	57	14	4.5	71	19.5	47	81	29.5	57
ø25	-	27.5	10.1	16	12	8	40	M6×20	C5	-	28	21 -0.1 -0.4	5	66.5	22.5	54.5	76.5	32.5	64.5	17.5	5	84	22.5	54.5	94	32.5	64.5
ø32	9.5	-	10.1	16	12	10	45	M6×20	-	12	34	21 -0.1 -0.4	7	72	23	60	82	33	70	23.5	5	93.5	23	58	103.5	33	68
ø40	6.5	-	18.1	18	12	10	52	M6×20	-	12	40	36 -0.1 -0.4	7	80.5	29.5	68.5	90.5	39.5	78.5	23.5	5	102	29.5	66.5	112	39.5	76.5
ø50	6.5	-	18.1	18	12	10	64	M8×20	-	12	50	36 -0.1 -0.4	8	82.5	30.5	70.5	92.5	40.5	80.5	28.5	5	108	30.5	67.5	118	40.5	77.5
ø63	7.5	-	20.1	24	14	10	77	M10×25	-	16	60	40 -0.1 -0.4	8	97	36	81	107	46	91	28.5	5	122.5	36	78	132.5	46	88
ø80	10.5	-	28.1	30	20	14	98	M12×40	-	20	77	56 -0.1 -0.4	10	125.5	43.5	105.5	135.5	53.5	115.5	35.5	8	159	43.5	103.5	169	53.5	113.5
ø100	10.5	-	28.1	30	20	16	118	M12×40	-	20	94	56 -0.1 -0.4	12	137	53	117	147	63	127	35.5	8	168.5	53	113	178.5	63	123

*1: When the stroke length with switch is 5 mm, dimensions are as below.

Bore size	Female thread			Male thread		
	A	B	CJ	A	B	CJ
ø12	50.5	27	44.5	61	27	44.5
ø16	51.5	27	45.5	63.5	27	45.5

SSD-K (double acting/high load), SSD-K-*C (rubber-air cushioned), SSD-KF (high load/fine speed), SSD-KU (low friction) dimensions table

Code / Bore size (mm)	Common dimensions												Female thread *1							Male thread *1							
	AC	CA	CB	CC	CD	D	E	G	H	MR	N	UB	WF	Without switch			With switch *2			a'	wf	Without switch			With switch *2		
														A	B	CJ	A	B	CJ			A	B	CJ	A	B	CJ
ø12	-	13.5	6.5 +0.4 +0.1	7	5	5	25	M4×12	C1.5	-	15.5	12 -0.1 -0.4	3.5	45.5	22	39.5	50.5	27	44.5	10.5	3.5	56	22	39.5	61	27	44.5
ø16	-	15	6.5 +0.4 +0.1	8	5	5	29	M4×12	C2	-	20	12 -0.1 -0.4	3.5	46.5	22	40.5	51.5	27	45.5	12	3.5	58.5	22	40.5	63.5	27	45.5
ø20	-	24	8 +0.4 +0.1	12	10	8	36	M6×20	C4	-	25.5	19 -0.1 -0.4	4.5	62	24.5	52	72	34.5	62	14	4.5	76	24.5	52	86	34.5	62
ø25	-	27.5	10 +0.4 +0.1	16	12	8	40	M6×20	C5	-	28	21 -0.1 -0.4	5	71.5	27.5	59.5	81.5	37.5	69.5	17.5	5	89	27.5	59.5	99	37.5	69.5
ø32	9.5	-	10 +0.4 +0.1	16	12	10	45	M6×20	-	12	34	21 -0.1 -0.4	7	82	33	70	92	43	80	23.5	5	103.5	33	68	13.5	43	78
ø40	6.5	-	18 +0.4 +0.1	18	12	10	52	M6×20	-	12	40	36 -0.1 -0.4	7	90.5	39.5	78.5	100.5	49.5	88.5	23.5	5	112	39.5	76.5	122	49.5	86.5
ø50	6.5	-	18 +0.4 +0.1	18	12	10	64	M8×20	-	12	50	36 -0.1 -0.4	8	92.5	40.5	80.5	102.5	50.5	90.5	28.5	5	118	40.5	77.5	128	50.5	87.5
ø63	7.5	-	20 +0.4 +0.1	24	14	10	77	M10×25	-	16	60	40 -0.1 -0.4	8	107	46	91	117	56	101	28.5	5	132.5	46	88	142.5	56	98
ø80	10.5	-	28 +0.4 +0.1	30	20	14	98	M12×40	-	20	77	56 -0.1 -0.4	10	135.5	53.5	115.5	145.5	63.5	125.5	35.5	8	169	53.5	113.5	179	63.5	123.5
ø100	10.5	-	28 +0.4 +0.1	30	20	16	118	M12×40	-	20	94	56 -0.1 -0.4	12	147	63	127	157	73	137	35.5	8	178.5	63	123	188.5	73	133

*1: For the long stroke length, dimensions are as below.

Code / Bore size (mm)		Female thread						Male thread					
		Without switch			With switch *2			Without switch			With switch *2		
		A	B	CJ	A	B	CJ	A	B	CJ	A	B	CJ
ø20	Over 100 st	80	36	63.5	83.5	46	73.5	87.5	36	63.5	97.5	46	73.5
ø25	Over 150 st	90	41	73	95	51	83	102.5	41	73	112.5	51	83
ø32		91.5	40.5	77.5	99.5	50.5	87.5	111	40.5	75.5	121	50.5	85.5
ø40		101	49	88	110	59	98	121.5	49	86	131.5	59	96
ø50		115	54	94	116	64	104	131.5	54	91	141.5	64	101
ø63	Over 200 st	138	56	101	127	66	111	142.5	56	98	152.5	66	108
ø80		147.5	63.5	125.5	155.5	73.5	135.5	179	63.5	123.5	189	73.5	133.5
ø100		73	73	137	167	83	147	188.5	73	133	198.5	83	143

*2: When the stroke length with switch is 5 mm, dimensions are as below.

Bore size	Female thread			Male thread		
	A	B	CJ	A	B	CJ
ø12	55.5	32	49.5	66	32	49.5
ø16	56.5	32	50.5	68.5	32	50.5

* A pin and a snap ring are included.

Dimensions with accessories (Mounting bracket: CB2)

● ø12 to ø25

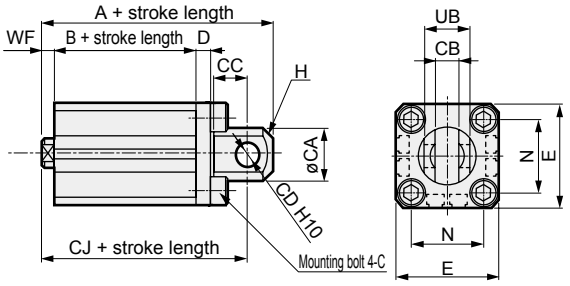

● ø32 to ø100

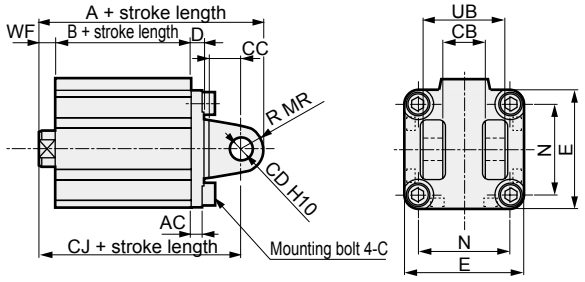

Rod end male thread

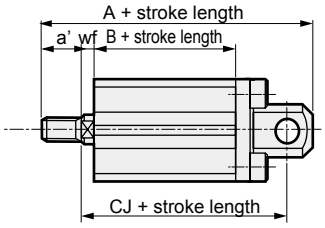

Rod end male thread

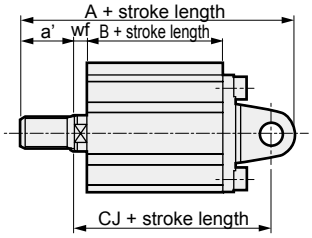

SSD (double acting/single rod), SSD-T (heat resistance), SSD-F (fine speed), SSD-0 (low speed) dimensions table

Code / Bore size (mm)	Common dimensions												Female thread							Male thread						
	AC	CA	CB	CC	CD	D	E	G	H	MR	N	UB	WF	Without switch			With switch *1			a'	wf	Without switch			With switch *1		
														A	B	CJ	A	B	CJ			A	B	CJ	A	B	CJ
ø12	-	12	$5.2^{+0.2}_{0}$	7	5	4	25	M4×12	C1.5	-	15.5	$10^{-0.1}_{-0.3}$	3.5	40.5	17	34.5	45.5	22	39.5	10.5	3.5	51	17	34.5	56	22	39.5
ø16	-	15	$6.6^{+0.3}_{0}$	8	5	5	29	M4×12	C2	-	20	$12^{-0.1}_{-0.4}$	3.5	41.5	17	35.5	46.5	22	40.5	12	3.5	53.5	17	35.5	58.5	22	40.5
ø20	-	20	$8.2^{+0.2}_{0}$	12	8	5	36	M6×16	C4	-	25.5	$16^{-0.1}_{-0.3}$	4.5	51	19.5	42	61	29.5	52	14	4.5	65	19.5	42	75	29.5	52
ø25	-	24	$10.2^{+0.2}_{0}$	14	10	5	40	M6×16	C5	-	28	$20^{-0.1}_{-0.3}$	5	57.5	22.5	47.5	67.5	32.5	57.5	17.5	5	75	22.5	47.5	85	32.5	57.5
ø32	4.5	-	$18.2^{+0.2}_{0}$	14	10	5	45	M6×16	-	10	34	$36^{-0.1}_{-0.3}$	7	60	23	50	70	33	60	23.5	5	81.5	23	48	91.5	33	58
ø40	5	-	$18.2^{+0.2}_{0}$	14	10	6	52	M6×16	-	10	40	$36^{-0.1}_{-0.3}$	7	68.5	29.5	58.5	78.5	39.5	68.5	23.5	5	90	29.5	56.5	100	39.5	66.5
ø50	6	-	$22.2^{+0.2}_{0}$	20	14	7	64	M8×20	-	14	50	$44^{-0.1}_{-0.3}$	8	80.5	30.5	66.5	90.5	40.5	76.5	28.5	5	106	30.5	63.5	116	40.5	73.5
ø63	7	-	$22.2^{+0.2}_{0}$	20	14	8	77	M10×25	-	14	60	$44^{-0.1}_{-0.3}$	8	88	36	74	98	46	84	28.5	5	113.5	36	71	123.5	46	81
ø80	9	-	$28.2^{+0.2}_{0}$	27	18	10	98	M12×40	-	18	77	$56^{-0.1}_{-0.3}$	10	109.5	43.5	91.5	119.5	53.5	101.5	35.5	8	143	43.5	89.5	153	53.5	99.5
ø100	12	-	$32.2^{+0.2}_{0}$	31	22	13	117	M12×40	-	22	94	$64^{-0.1}_{-0.3}$	12	132	53	110	142	63	120	35.5	8	163.5	53	106	173.5	63	116

*1: When the stroke length with switch is 5 mm, dimensions are as below.

Bore size	Female thread			Male thread		
	A	B	CJ	A	B	CJ
ø12	50.5	27	44.5	61	27	44.5
ø16	51.5	27	45.5	63.5	27	45.5

SSD-K (double acting/high load), SSD-K-*C (rubber-air cushioned), SSD-KF (high load/fine speed), SSD-KU (low friction) dimensions table

Code / Bore size (mm)	Common dimensions												Female thread *1							Male thread *1						
	AC	CA	CB	CC	CD	D	E	G	H	MR	N	UB	WF	Without switch			With switch *2			a'	wf	Without switch			With switch *2		
														A	B	CJ	A	B	CJ			A	B	CJ	A	B	CJ
ø12	-	12	$5.2^{+0.2}_{0}$	7	5	4	25	M4×12	C1.5	-	15.5	$10^{-0.1}_{-0.3}$	3.5	45.5	22	39.5	50.5	27	44.5	10.5	3.5	56	22	39.5	61	27	44.5
ø16	-	15	$6.6^{+0.3}_{0}$	8	5	5	29	M4×12	C2	-	20	$12^{-0.1}_{-0.4}$	3.5	46.5	22	40.5	51.5	27	45.5	12	3.5	58.5	22	40.5	63.5	27	45.5
ø20	-	20	$8.2^{+0.2}_{0}$	12	8	5	36	M6×16	C4	-	25.5	$16^{-0.1}_{-0.3}$	4.5	56	24.5	47	66	34.5	57	14	4.5	70	24.5	47	80	34.5	57
ø25	-	24	$10.2^{+0.2}_{0}$	14	10	5	40	M6×16	C5	-	28	$20^{-0.1}_{-0.3}$	5	62.5	27.5	52.5	72.5	37.5	62.5	17.5	5	80	27.5	52.5	90	37.5	62.5
ø32	4.5	-	$18.2^{+0.2}_{0}$	14	10	5	45	M6×16	-	10	34	$36^{-0.1}_{-0.3}$	7	70	33	60	80	43	70	23.5	5	91.5	33	58	101.5	43	68
ø40	5	-	$18.2^{+0.2}_{0}$	14	10	6	52	M6×16	-	10	40	$36^{-0.1}_{-0.3}$	7	78.5	39.5	68.5	88.5	49.5	78.5	23.5	5	100	39.5	66.5	110	49.5	76.5
ø50	6	-	$22.2^{+0.2}_{0}$	20	14	7	64	M8×20	-	14	50	$44^{-0.1}_{-0.3}$	8	90.5	40.5	76.5	100.5	50.5	86.5	28.5	5	116	40.5	73.5	126	50.5	83.5
ø63	7	-	$22.2^{+0.2}_{0}$	20	14	8	77	M10×25	-	14	60	$44^{-0.1}_{-0.3}$	8	98	46	84	108	56	94	28.5	5	123.5	46	81	133.5	56	91
ø80	9	-	$28.2^{+0.2}_{0}$	27	18	10	98	M12×40	-	18	77	$56^{-0.1}_{-0.3}$	10	119.5	53.5	101.5	129.5	63.5	111.5	35.5	8	153	53.5	99.5	163	63.5	109.5
ø100	12	-	$32.2^{+0.2}_{0}$	31	22	13	117	M12×40	-	22	94	$64^{-0.1}_{-0.3}$	12	142	63	120	152	73	130	35.5	8	173.5	63	116	183.5	73	126

*1: For the long stroke length, dimensions are as below.

Code / Bore size (mm)		Female thread						Male thread					
		Without switch			With switch *2			Without switch			With switch *2		
		A	B	CJ	A	B	CJ	A	B	CJ	A	B	CJ
ø20	Over 100 st	71	36	58.5	77.5	46	68.5	81.5	36	58.5	91.5	46	68.5
ø25	Over 150 st	78	41	66	86	51	76	93.5	41	66	103.5	51	76
ø32		79.5	40.5	67.5	87.5	50.5	77.5	99	40.5	65.5	109	50.5	75.5
ø40		99	49	78	98	59	88	109.5	49	76	119.5	59	86
ø50		106	54	90	114	64	100	129.5	54	87	139.5	64	97
ø63	Over 200 st	122	56	94	118	66	104	133.5	56	91	143.5	66	101
ø80		142.5	63.5	111.5	139.5	73.5	121.5	163	63.5	109.5	173	73.5	119.5
ø100		73	73	130	162	83	140	183.5	73	126	193.5	83	136

*2: When the stroke length with switch is 5 mm, dimensions are as below.

Bore size	Female thread			Male thread		
	A	B	CJ	A	B	CJ
ø12	55.5	32	49.5	66	32	49.5
ø16	56.5	32	50.5	68.5	32	50.5

* A pin and a snap ring are included.